SolidCAM + SolidWorks

The complete integrated Manufacturing Solution

SolidCAM

The Leaders in Integrated CAM

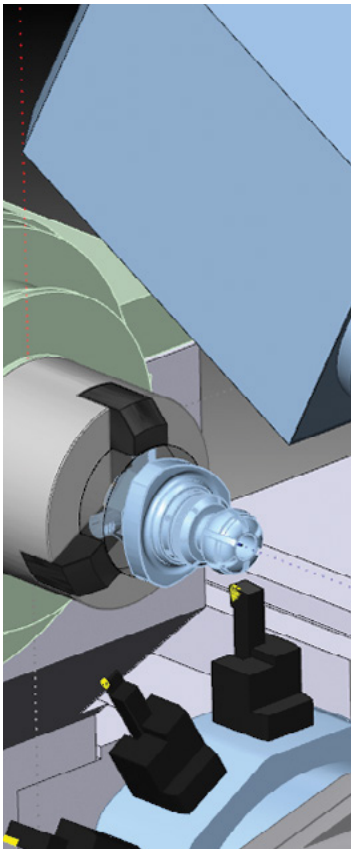

Mill-Turn Machine Tool Configurations

iMachining 2D & 3D | 2.5D Milling | HSS | HSM | Indexial Multi-Sided | Simultaneous 5-Axis | Turning & Mill-Turn | Solid Probe

Table of Contents

Mill-Turn CNC-Machines 2
One Rotary Turret, One Table 4
One Rotary Turret, Two Tables 6
Two Rotary Turrets, Two Tables 10
One Spindle Turret, One Table 14
One Spindle Turret, Two Tables. 20
One Spindle Turret, One Rotary Turret, Two Tables 30

Document number: SCMTMTCENG13000

This reference guide is intended for SolidCAM resellers, who want to improve their knowledge of SolidCAM Mill-Turn module and its capabilities in creating different configurations of Mill-Turn CNC-machines.

The booklet provides detailed information and demonstrates various types of the machines, along with parts containing a machine ID file (*.vmid), pre-processor file (*.prp), and post-processor file (*.gpp), and a folder with the machine simulation for better visualization of the machining process.

To download the part with the related machine files, click the **Download** button located under the machine simulation image.

For more information on SolidCAM Mill-Turn module, visit the CAM-Solutions page on the web at **www.solidcam.com/cam-solutions/turning-mill-turn**.

Overview

The fastest growing and most demanding class of CNC machines on the market today are multi-task machines, that combine several capabilities into one machine. Multiple spindles, multiple turrets, material being machined in multiple stages, transferring from spindle to spindle without handling, stock inserted at one end, finished parts coming out the other.

4/5-Axis Simultaneous Mill Turn machines have many uses and allow much more flexibility and capabilities, not offered from other machine configurations. With this in mind many of these have multi-axes, upper turrets, lower turrets, CYB and Sub Spindles.

SolidCAM has the advanced technology to support the programming of all the latest multi-function CNC machines, providing powerful programming tools that are easy to learn and use, with the ultimate in flexibility and configurability.

The use of tail stocks, stead rest, sub spindles, rotary and linear turrets along with C Axis, CY Axis and B Axis, are regular features on today's Mill-Turn machine tools. In this collision rich environment, the programming of these machines is made simple and safe by utilizing SolidCAM's turning and milling operations in a single environment.

Support for multi-turret and multi-spindle Programming, with turret synchronization and full machine simulation, is seamlessly integrated into one extremely powerful package. All SolidCAM milling and turning operations are available for the programming of mill-turn machines. All ancillary devices can also be defined and taken into account for simulation and gouge checking.

SolidCAM goes beyond just programming these complex machines, with intelligent management of rest material between Milling and Turning operations, for the most efficient tool paths and reduced cycle times, ensuring the highest possible productivity.

Mill-Turn Machine Simulation

Mill-Turn machine simulation in SolidCAM offers a full kinematic simulation package, supporting simulation of all turning and milling operations and of all CNC machine components and devices. An option enables taking the feeds into account and showing real time simulation.

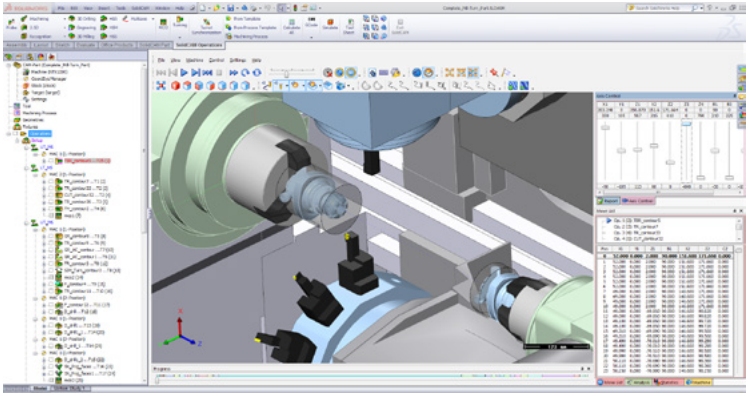

The simulator offers full collision detection between machine components, workpiece, fixtures and tool holders, including many display options allowing the user full control over every aspect of the simulation. All the cycles and movements are supported along with the full graphics of the machine components and auxiliary devices such as tail stock and steady rest, providing safety as the part is fully tested before reaching the actual machine tool.

One Rotary Turret, One Table

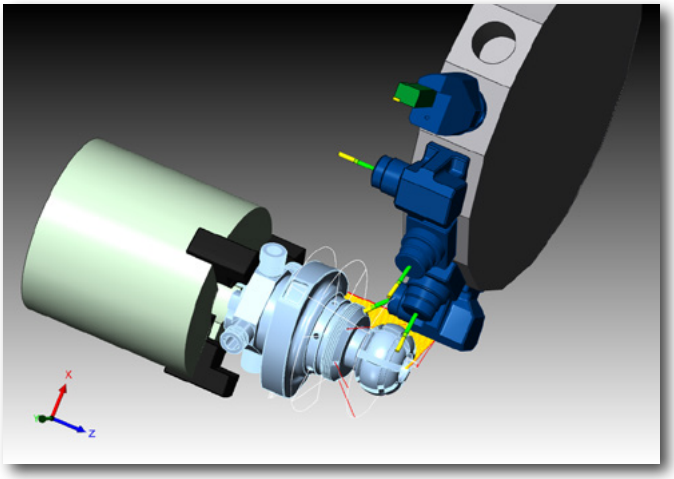

Download the part and machine files

This machine has only one rotary turret around Z-axis and one turning table.

The following Mill-Turn and Turning operations are used to perform the machining of the part:

- **Contour turning (TR_contour)**
  This turning operation is used to rough the external contour of the part. A composite tool with C-type insert is used. The **Mode** is set to **Long external** to create passes along the part's rotational axis. Position #1 of Coordinate System #1 is used for the operation.
- **Face milling (F_contour2)**
  This operation perform the machining face pocket using a Profile milling operation. A Ø6 mm end mill is used for the operation. The machining is executed in one finishing pass.
- **Machining of the side faces (F_contour4)**
  This Profile operation is used to perform the roughing of the side pockets. A Ø6 mm end mill is used for the operation. The machining is executed in one finishing pass.
- **Drilling (D_drill)**
  This Drill operation is used to perform the machining of the holes located on the cylindrical face. A Ø6 mm U-drill is used in .
- **Drilling (D_drill1)**
  This Drill operation performs machining of the holes located on the inclined face. A Ø6 mm U-drill is used in Position #2 of Coordinate System #1. The **Transform** option is applied to create a circular pattern of operations around the revolution axis.
- **Turning and back side milling (TR_contour1; F_contour3)**
  These operations perform turning and facial milling of the back faces of the model on the second setup. Position #1 of Coordinate System #2 is used for the operations.

One Rotary Turret, Two Tables

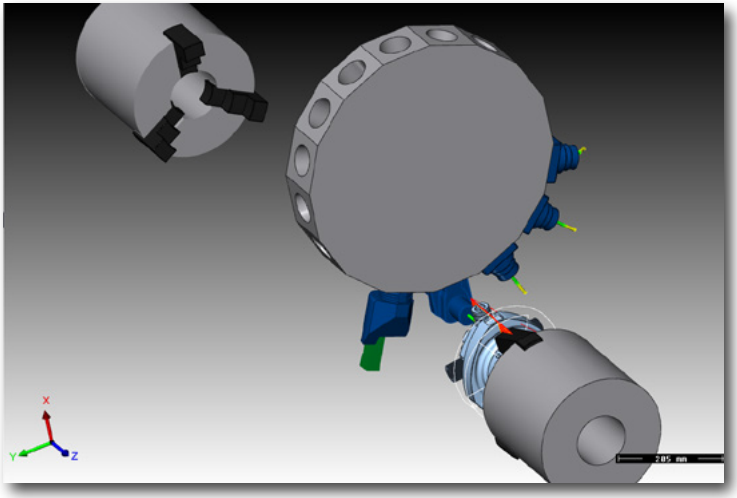

Download the part and machine files

This machine has one rotary turret around Z-axis and two turning tables, while the back spindle has positive direction of the Z-axis.

The following Mill-Turn and Turning operations are used to perform the machining of the part:

- **Main spindle operations (TR_contour, F_contour2, F_contour4, D_drill, D_drill1)**
  These operations are used to machine the external contour of the part, face pocket, side pockets and the holes located on the cylindrical face and the inclined face.
- **Machine Control Operation (part transfer)**
  This operation transfers the part from the main spindle (TB1) to the back spindle (TB2). First, some parameters of the turret are disabled: coolant flood is turned off, and rotation is stopped. The the turret is moved to a safe distance, and the tool is unloaded. The main spindle is set to the Milling mode and rotated to an initial position. Then the back spindle is set to the Milling mode, moves to the clamped part and returns to the 0 position along with the clamped part.
- **Turning and back side milling (TR_contour1; F_contour3)**
  These operations perform turning and facial milling of the back faces of the model using the back spindle. Position #1 of Coordinate System #2 is used for the operations. Separate setup settings are used for machining of the part clamped in the back spindle.
- **Machine Control Operation (turret retract)**
  This operation takes back the turret and unloads the tool.

One Rotary Turret, Two Tables

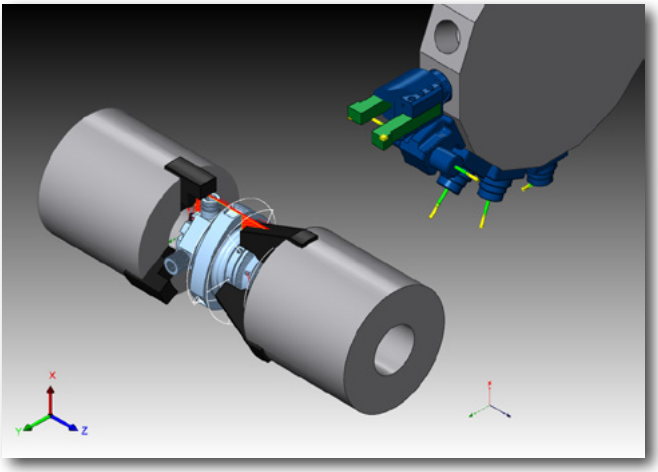

Download the part and machine files

This machine has one rotary turret around Z-axis and two turning tables, while the back spindle has negative direction of the Z-axis.

The following Mill-Turn and Turning operations are used to perform the machining of the part:

- **Main spindle operations (TR_contour, F_contour2, F_contour4, D_drill, D_drill1)**
  These operations are used to machine the external contour of the part, face pocket, side pockets and the holes located on the cylindrical face and the inclined face.
- **Machine Control Operation (part transfer)**
  This operation transfers the part from the main spindle (TB1) to the back spindle (TB2). First, some parameters of the turret are disabled: coolant flood is turned off, and rotation is stopped. The the turret is moved to a safe distance, and the tool is unloaded. The main spindle is set to the Milling mode and rotated to an initial position. Then the back spindle is set to the Milling mode, moves to the clamped part and returns to the 0 position along with the clamped part.
- **Turning and back side milling (TR_contour1; F_contour3)**
  These operations perform turning and facial milling of the back faces of the model using the back spindle. Position #1 of Coordinate System #2 is used for the operations. Separate setup settings are used for machining of the part clamped in the back spindle.
- **Machine Control Operation (turret retract)**
  This operation takes back the turret and unloads the tool.

Two Rotary Turrets, Two Tables

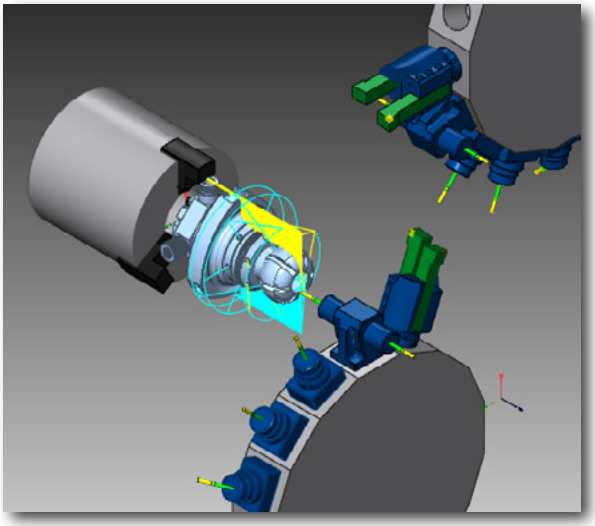

Download the part and machine files

This machine has two rotary turret around Z-axis and two turning tables, while the back spindle has positive direction of the Z-axis.

The following Mill-Turn and Turning operations are used to perform the machining of the part:

- **Balanced Roughing of the Front Surface (TBR_contour)**
  This operations is used to machine the external contour of the part using the upper and lower turrets simultaneously.
- **Machine Control Operation (tr2_retract)**
  This operation takes the lower turret to a safety distance to perform the next operations with the upper turret only.
- **Front Side Milling and Drilling (F_contour2, F_Contour4, D_drill)**
  These operations perform facial milling and drilling of the model using the main spindle and upper turret. Position #1 of Coordinate System #1 is used for the operations.
- **4-axis Drilling (D_drill2)**
  This Drilling operation makes holes on the inclined face of the model. The **Transform** option is used to create a circular pattern of operations around the revolution axis. Position #2 of Coordinate System #1 is used for the operations.
- **Machine Control Operation (tr1_retract)**
  This operation takes back the upper turret.
- **Front Side Milling and Drilling (F_contour3, F_contour6, D_drill1, D_drill3)**
  These operations perform facial milling and drilling of the model using the main spindle and upper turret. Position #1 of Coordinate System #1 is used for the operations.
- **Machine Control Operations (tr2_retract_1, part transfer)**
  The first operation takes back the lower turret. The second operation transfers the part to the back spindle.
- **Balanced Roughing of the Back Surface (TBR_contour1)**
  This operations is used to machine the external contour of the part on the back spindle using the upper and lower turrets simultaneously.
- **Machine Control Operation (tr2_retract_2)**
  This operation takes the lower turret to a safety distance to perform the next operations with the upper turret only.

Two Rotary Turrets, Two Tables

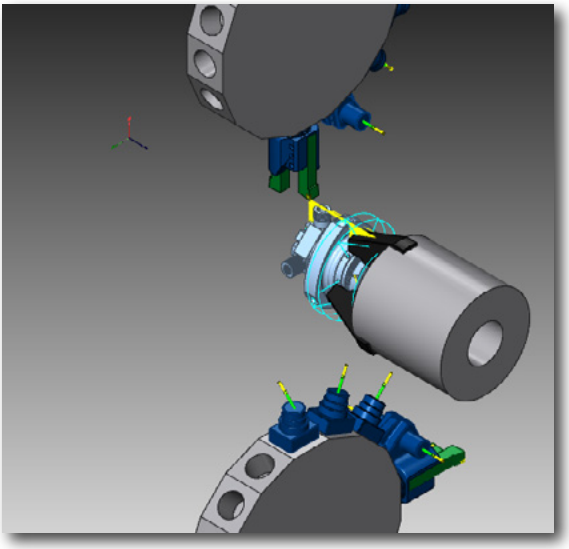

Download the part and machine files

This machine has two rotary turret around Z-axis and two turning tables, while the back spindle has negative direction of the Z-axis.

The following Mill-Turn and Turning operations are used to perform the machining of the part:

- **Balanced Roughing of the Front Surface (TBR_contour)**
  This operations is used to machine the external contour of the part using the upper and lower turrets simultaneously.
- **Machine Control Operation (tr2 retract)**
  This operation takes the lower turret to a safety distance to perform the next operations with the upper turret only.
- **Front Side Milling and Drilling (F_contour2, F_Contour4, D_drill)**
  These operations perform facial milling and drilling of the model using the main spindle and upper turret. Position #1 of Coordinate System #1 is used for the operations.
- **4-axis Drilling (D_drill2)**
  This Drilling operation makes holes on the inclined face of the model. The **Transform** option is used to create a circular pattern of operations around the revolution axis. Position #2 of Coordinate System #1 is used for the operations.
- **Machine Control Operation (tr1 retract)**
  This operation takes back the upper turret.
- **Front Side Milling and Drilling (F_contour3, F_contour6, D_drill1, D_drill3)**
  These operations perform facial milling and drilling of the model using the main spindle and upper turret. Position #1 of Coordinate System #1 is used for the operations.
- **Machine Control Operations (tr2 retract 1, part transfer)**
  The first operation takes back the lower turret. The second operation transfers the part to the back spindle.
- **Balanced Roughing of the Back Surface (TBR_contour1)**
  This operations is used to machine the external contour of the part on the back spindle using the upper and lower turrets simultaneously.
- **Machine Control Operation (tr2 retract 2)**
  This operation takes the lower turret to a safety distance to perform the next operations with the upper turret only.

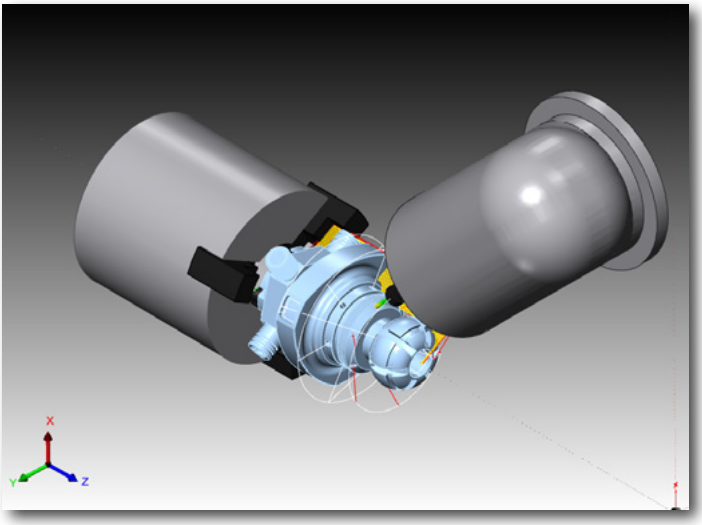

Download the part and machine files

This machine (1str.1tb.01) has one spindle turret with the B-axis rotating around Y-axis, tool direction in the Z-axis, and one turning table.

The following Mill-Turn and Turning operations are used to perform the machining of the part:

- **Contour turning (TR_contour)**
  This turning operation is used to rough the external contour of the part. A composite tool with C-type insert is used. The **Mode** is set to **Long external** to create passes along the part's rotational axis. Position #1 of Coordinate System #1 is used for the operation.
- **Face milling (F_contour2)**
  This operation perform the machining face pocket using a Profile milling operation. A Ø6 mm end mill is used for the operation. The machining is executed in one finishing pass.
- **Machining of the side faces (F_contour4)**
  This Profile operation is used to perform the roughing of the side pockets. A Ø6 mm end mill is used for the operation. The machining is executed in one finishing pass.
- **Drilling (D_drill)**
  This Drill operation is used to perform the machining of the holes located on the cylindrical face. A Ø6 mm U-drill is used.
- **Drilling (D_drill1)**
  This Drill operation performs machining of the holes located on the inclined face. A Ø6 mm U-drill is used in Position #2 of Coordinate System #1. The **Transform** option is applied to create a circular pattern of operations around the revolution axis.
- **Turning and back side milling (TR_contour1; F_contour3)**
  These operations perform turning and facial milling of the back faces of the model on the second setup. Position #1 of Coordinate System #2 is used for the operations.
- **Machine Control Operation (MACHINE_CTRL)**
  This operation performs withdrawal of the spindle turret.

One Spindle Turret, One Table

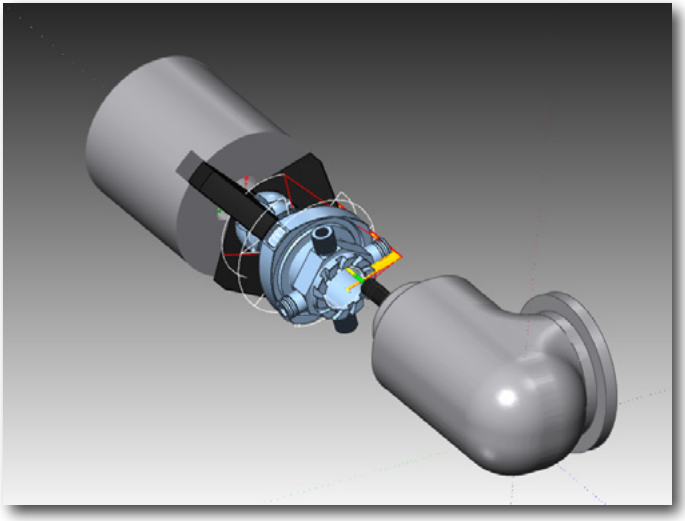

Download the part and machine files

This machine (1str.1tb.02) has one spindle turret with the B-axis rotating around Y-axis and one turning table, with tool direction in the X-axis.

The following Mill-Turn and Turning operations are used to perform the machining of the part:

- **Contour turning (TR_contour)**
  This turning operation is used to rough the external contour of the part. A composite tool with C-type insert is used. The **Mode** is set to **Long external** to create passes along the part's rotational axis. Position #1 of Coordinate System #1 is used for the operation.
- **Face milling (F_contour2)**
  This operation perform the machining face pocket using a Profile milling operation. A Ø6 mm end mill is used for the operation. The machining is executed in one finishing pass.
- **Machining of the side faces (F_contour4)**
  This Profile operation is used to perform the roughing of the side pockets. A Ø6 mm end mill is used for the operation. The machining is executed in one finishing pass.
- **Drilling (D_drill)**
  This Drill operation is used to perform the machining of the holes located on the cylindrical face. A Ø6 mm U-drill is used.
- **Drilling (D_drill1)**
  This Drill operation performs machining of the holes located on the inclined face. A Ø6 mm U-drill is used in Position #2 of Coordinate System #1. The **Transform** option is applied to create a circular pattern of operations around the revolution axis.
- **Turning and back side milling (TR_contour1; F_contour3)**
  These operations perform turning and facial milling of the back faces of the model on the second setup. Position #1 of Coordinate System #2 is used for the operations.
- **Machine Control Operation (MACHINE_CTRL)**
  This operation performs withdrawal of the spindle turret.

One Spindle Turret, One Table

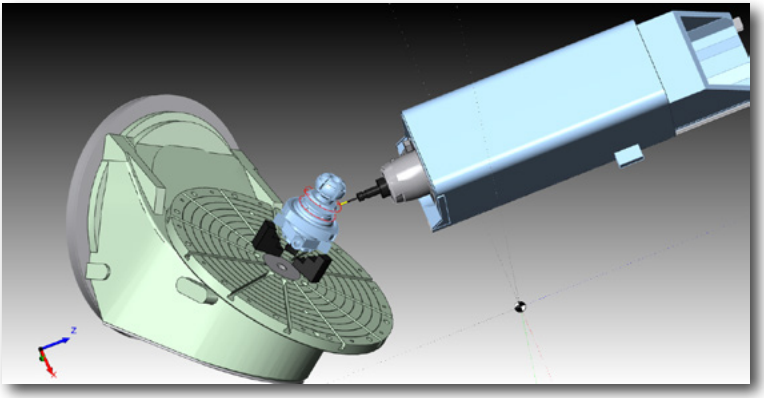

Download the part and machine files

This machine (1str.1tb.03) is kinematically similar to DMU80 eVo linear machine: it has one spindle turret and one turning table with the B-axis on 45°, while the back spindle has positive direction of the Z-axis.

The following Mill-Turn and Turning operations are used to perform the machining of the part:

- **Face turning (TR_contour1)**
  This turning operation is used to rough the external contour of the part. A composite External turning tool with C-type insert is used. The **Mode** is set to **Face front** to generate a tool path for front face machining. Position #1 of Coordinate System #1 is used for the operation.
- **Contour turning (T_contour)**
  This operation is used to generate the tool path for the external faces roughing. A composite External turning tool with C-type insert is used. The **Mode** is set to **Long external** to create passes along the part's rotational axis.
- **Grooves machining (5X_Proj_faces)**
  This 5-axis operation is intended for machining the grooves on the bulb, with the Projection strategy chosen. A Ø6 mm end mill is used for the operation. The **Rotation/Translation** option is used to machine the grooves in 6 steps around the Z-axis.
- **Face milling (F_contour2)**
  This operation perform the machining face pocket using a Profile milling operation. A Ø6 mm end mill is used for the operation. The machining is executed in one finishing pass.
- **Machining of the side faces (F_contour4)**
  This Profile operation is used to perform the roughing of the side pockets. A Ø6 mm end mill is used for the operation. The machining is executed in one finishing pass.
- **Drilling (D_drill)**
  This Drill operation is used to perform the machining of the holes located on the cylindrical face. A Ø6 mm U-drill is used.
- **Drilling (D_drill2)**
  This Drill operation performs machining of the holes located on the inclined face. A Ø6 mm U-drill is used in Position #2 of Coordinate System #1. The **Transform** option is applied to create a circular pattern of operations around the revolution axis.
- **External surfaces drilling (5X_Drill_drill_5x)**
  This operation perform drilling of the external surfaces. A Ø6 mm U-drill is used in Position #1 of Coordinate System #1.
- **Machine Control Operation (MACHINE_CTRL)**
  This operation performs returns the spindle and table to the initial position.

One Spindle Turret, Two Tables

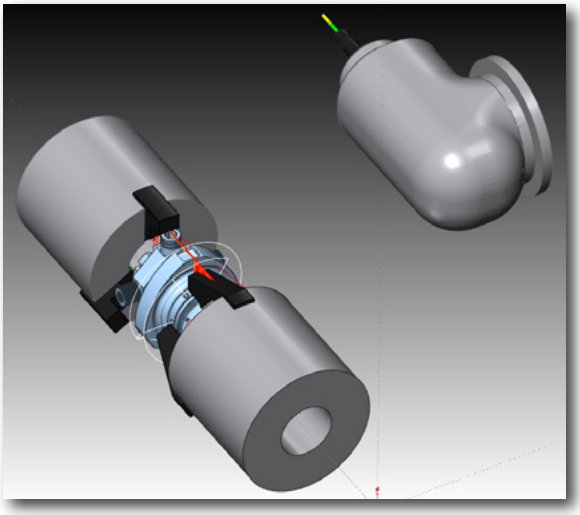

Download the part and machine files

This machine (1str.2tb.01) has one spindle turret with the B-axis rotating around Y-axis, tool direction in the Z-axis, and two turning tables, while the back spindle has positive direction of the Z-axis.

The following Mill-Turn and Turning operations are used to perform the machining of the part:

- **Contour turning (TR_contour)**
  This operation is used to generate the tool path for the external faces roughing. A composite External turning tool with C-type insert is used. The **Mode** is set to **Long external** to create passes along the part's rotational axis.
- **Face milling (F_contour2)**
  This operation perform the machining face pocket using a Profile milling operation. A Ø6 mm end mill is used for the operation. The machining is executed in one finishing pass.
- **Machining of the side faces (F_contour4)**
  This Profile operation is used to perform the roughing of the side pockets. A Ø6 mm end mill is used for the operation. The machining is executed in one finishing pass.
- **Drilling (D_drill)**
  This Drill operation is used to perform the machining of the holes located on the cylindrical face. A Ø6 mm U-drill is used.
- **Drilling (D_drill1)**
  This Drill operation performs machining of the holes located on the inclined face. A Ø6 mm U-drill is used in Position #2 of Coordinate System #1. The **Transform** option is applied to create a circular pattern of operations around the revolution axis.
- **Machine Control Operation (part transfer)**
  This operation transfers the part from the main spindle (TB1) to the back spindle (TB2). First, some parameters of the turret are disabled: coolant flood is turned off, and rotation is stopped. The the turret is moved to a safe distance. The main spindle is set to the Milling mode and rotated to an initial position. Then the back spindle is set to the Milling mode, moves to the clamped part and returns to the 0 position along with the clamped part.
- **Turning and back side milling (TR_contour1; F_contour5)**
  These operations perform turning and facial milling of the back faces of the model using the back spindle. Positions #1 and #2 of Coordinate System #2 are used for the operations.
- **Machine Control Operation (turret retract)**
  This operation sets the turret to the initial position.

One Spindle Turret, Two Tables

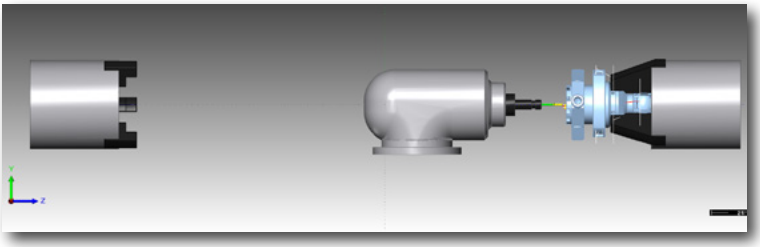

Download the part and machine files

This machine (1str.2tb.02) has one spindle turret with the B-axis rotating around Y-axis, tool direction in the X-axis, and two turning tables, while the back spindle has positive direction of the Z-axis.

The following Mill-Turn and Turning operations are used to perform the machining of the part:

- **Contour turning (TR_contour)**
  This operation is used to generate the tool path for the external faces roughing. A composite External turning tool with C-type insert is used. The **Mode** is set to **Long external** to create passes along the part's rotational axis.
- **Face milling (F_contour2)**
  This operation perform the machining face pocket using a Profile milling operation. A Ø6 mm end mill is used for the operation. The machining is executed in one finishing pass.
- **Machining of the side faces (F_contour4)**
  This Profile operation is used to perform the roughing of the side pockets. A Ø6 mm end mill is used for the operation. The machining is executed in one finishing pass.
- **Drilling (D_drill)**
  This Drill operation is used to perform the machining of the holes located on the cylindrical face. A Ø6 mm U-drill is used.
- **Drilling (D_drill1)**
  This Drill operation performs machining of the holes located on the inclined face. A Ø6 mm U-drill is used in Position #2 of Coordinate System #1. The **Transform** option is applied to create a circular pattern of operations around the revolution axis.
- **Machine Control Operation (part transfer)**
  This operation transfers the part from the main spindle (TB1) to the back spindle (TB2). First, some parameters of the turret are disabled: coolant flood is turned off, and rotation is stopped. The the turret is moved to a safe distance. The main spindle is set to the Milling mode and rotated to an initial position. Then the back spindle is set to the Milling mode, moves to the clamped part and returns to the 0 position along with the clamped part.
- **Turning and back side milling (TR_contour1; F_contour5)**
  These operations perform turning and facial milling of the back faces of the model using the back spindle. Positions #1 and #2 of Coordinate System #2 are used for the operations.
- **Machine Control Operation (turret retract)**
  This operation sets the turret to the initial position.

One Spindle Turret, Two Tables

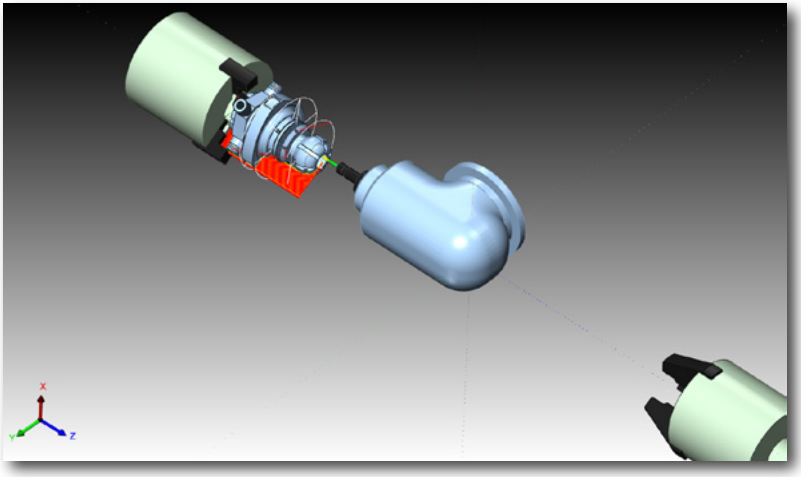

Download the part and machine files

This machine (1str.2tb.03) has one spindle turret with the B-axis rotating around Y-axis, tool direction in the Z-axis, and two turning tables, while the back spindle has negative direction of the Z-axis.

The following Mill-Turn and Turning operations are used to perform the machining of the part:

- **Contour turning (TR_contour)**
  This operation is used to generate the tool path for the external faces roughing. A composite External turning tool with C-type insert is used. The **Mode** is set to **Long external** to create passes along the part's rotational axis.
- **Face milling (F_contour2)**
  This operation perform the machining face pocket using a Profile milling operation. A Ø6 mm end mill is used for the operation. The machining is executed in one finishing pass.
- **Machining of the side faces (F_contour4)**
  This Profile operation is used to perform the roughing of the side pockets. A Ø6 mm end mill is used for the operation. The machining is executed in one finishing pass.
- **Drilling (D_drill)**
  This Drill operation is used to perform the machining of the holes located on the cylindrical face. A Ø6 mm U-drill is used.
- **Drilling (D_drill1)**
  This Drill operation performs machining of the holes located on the inclined face. A Ø6 mm U-drill is used in Position #2 of Coordinate System #1. The **Transform** option is applied to create a circular pattern of operations around the revolution axis.
- **Machine Control Operation (part transfer)**
  This operation transfers the part from the main spindle (TB1) to the back spindle (TB2). First, some parameters of the turret are disabled: coolant flood is turned off, and rotation is stopped. The the turret is moved to a safe distance. The main spindle is set to the Milling mode and rotated to an initial position. Then the back spindle is set to the Milling mode, moves to the clamped part and returns to the 0 position along with the clamped part.
- **Turning and back side milling (TR_contour1; F_contour3)**
  These operations perform turning and facial pocket milling of the back faces of the model using the back spindle. Positions #1 and #2 of Coordinate System #2 are used for the operations.
- **Machine Control Operation (turret retract)**
  This operation sets the turret to the initial position.

One Spindle Turret, Two Tables

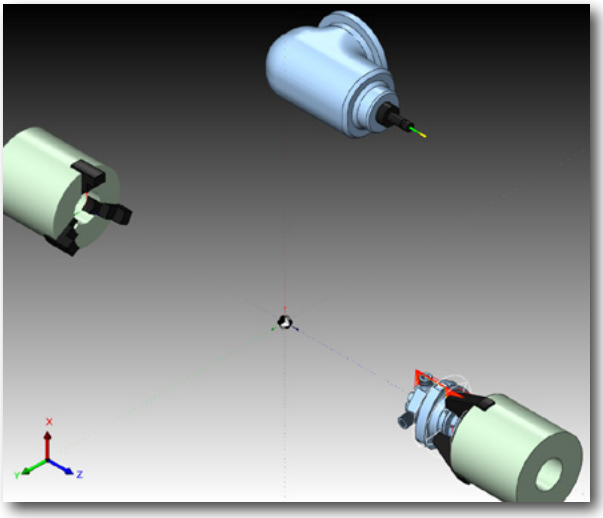

Download the part and machine files

This machine (1str.2tb.04) has one spindle turret with the B-axis rotating around Y-axis, tool direction in the X-axis, and two turning tables, while the back spindle has negative direction of the Z-axis.

The following Mill-Turn and Turning operations are used to perform the machining of the part:

- **Contour turning (TR_contour)**
  This operation is used to generate the tool path for the external faces roughing. A composite External turning tool with C-type insert is used. The **Mode** is set to **Long external** to create passes along the part's rotational axis.
- **Face milling (F_contour2)**
  This operation perform the machining face pocket using a Profile milling operation. A Ø6 mm end mill is used for the operation. The machining is executed in one finishing pass.
- **Machining of the side faces (F_contour4)**
  This Profile operation is used to perform the roughing of the side pockets. A Ø6 mm end mill is used for the operation. The machining is executed in one finishing pass.
- **Drilling (D_drill)**
  This Drill operation is used to perform the machining of the holes located on the cylindrical face. A Ø6 mm U-drill is used.
- **Drilling (D_drill1)**
  This Drill operation performs machining of the holes located on the inclined face. A Ø6 mm U-drill is used in Position #2 of Coordinate System #1. The **Transform** option is applied to create a circular pattern of operations around the revolution axis.
- **Machine Control Operation (part transfer)**
  This operation transfers the part from the main spindle (TB1) to the back spindle (TB2). First, some parameters of the turret are disabled: coolant flood is turned off, and rotation is stopped. The the turret is moved to a safe distance. The main spindle is set to the Milling mode and rotated to an initial position. Then the back spindle is set to the Milling mode, moves to the clamped part and returns to the 0 position along with the clamped part.
- **Turning and back side milling (TR_contour1; F_contour3)**
  These operations perform turning and facial pocket milling of the back faces of the model using the back spindle. Position #1 of Coordinate System #2 is used for the operations.
- **Machine Control Operation (turret retract)**
  This operation sets the turret to the initial position.

One Spindle Turret, Two Tables

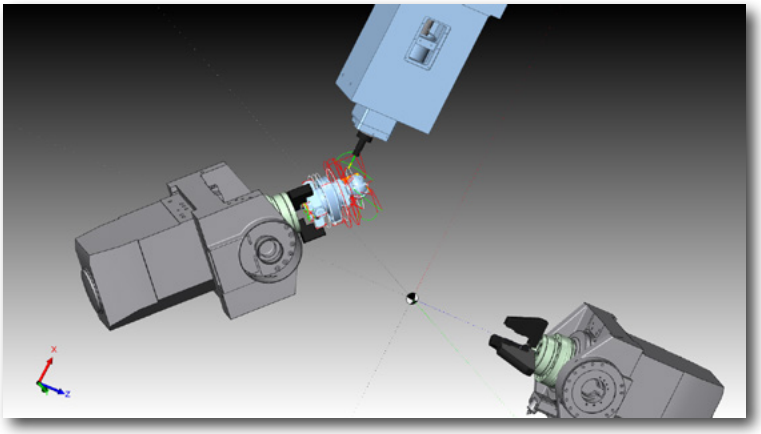

Download the part and machine files

This machine configuration (1str.2tb.05) represents STAMA Mill-Turn machine having one spindle turret, tool direction in the X-axis, and two turning tables, both with B-axis rotating around Y-axis, while the back spindle has positive direction of the Z-axis.

The following Mill-Turn and Turning operations are used to perform the machining of the part:

- **Front surface turning, milling and drilling (TR_contour, TR_contour6, F_contour8, F_contour7, F_contour2, F_contour4, D_drill, D_drill1, 5X_Drill_drill_5x, 5X_Proj_faces)**
  The first operation is used to generate the tool path for the external faces roughing. The next operation is used to rough the model face. Then the next operation machines the face pocket using a Profile milling operation. The Profile operation is also used to perform the roughing of the side pockets. The Drill operation is used to perform the machining of the holes located on the cylindrical face. The next Drill operation performs machining of the holes located on the inclined face. The **Transform** option is applied to create a circular pattern of operations around the revolution axis. Then the Multiaxis drilling operation performs drilling of the external surfaces. The 5-axis operation is intended for machining the grooves on the bulb, with the Projection strategy chosen.
- **Machine Control Operation (part transfer)**
  This operation transfers the part from the main spindle (TB1) to the back spindle (TB2). First, some parameters of the turret are disabled: coolant flood is turned off, and rotation is stopped. The the turret is moved to a safe distance. The main spindle is set to the Milling mode and rotated to an initial position. Then the back spindle is set to the Milling mode, moves to the clamped part and returns to the 0 position along with the clamped part.
- **Turning and back side milling (TR_contour1, TR_contour9, F_contour10, F_contour5, 5X_Proj_faces1)**
  These operations perform turning and facial milling of the back faces of the model using the back spindle. Positions #1 and #2 of Coordinate System #2 are used for the operations.
- **Machine Control Operation (MACHINE_CTRL)**
  This operation rotates the back spindle to the initial position.
- **Machine Control Operation (turret retract)**
  This operation sets the turret to the initial position.

One Spindle Turret, One Rotary Turret, Two Tables

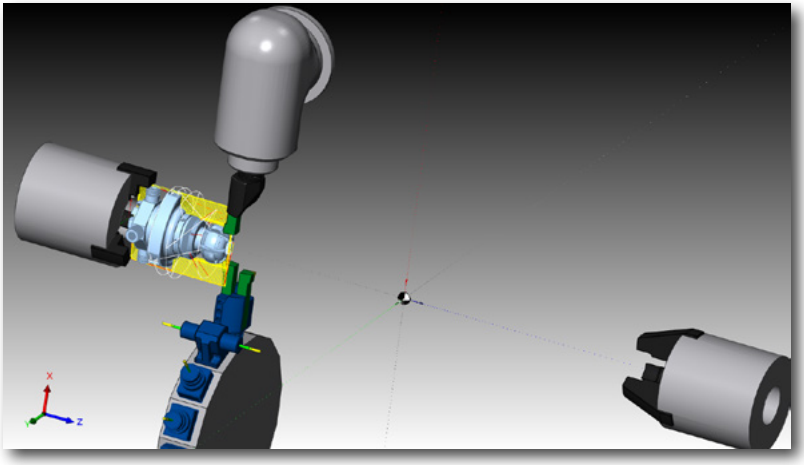

Download the part and machine files

This machine (1str.1rtr.2tb.01) has one spindle turret with the B-axis rotating around Y-axis, one rotary turret with rotation around the Z-axis, tool direction in the Z-axis, and two turning tables, while the back spindle has the positive direction of the Z-axis.

The following Mill-Turn and Turning operations are used to perform the machining of the part:

- **Front side turning, milling and drilling (TBR_contour, F_contour2, F_contour4, D_drill, D_drill2)**
  The Balanced Rough operation is used to machine the model contour with both turrets working simultaneously. Then the lower turret retracts with a Machine Control Operation. A number of milling operation are performed with the upper turret in Positions #1 and #2 of Coordinate System #1. The MCO performs the upper turret withdrawal before the part transfer to the back spindle.
- **Machine Control Operation (part transfer)**
  This operation transfers the part from the main spindle (TB1) to the back spindle (TB2).
- **Turning and back side milling (TBR_contour1, F_contour5, TR_contour8, F_contour10)**
  The Balanced Rough operation is used to machine the model contour with both turrets working simultaneously. Then the lower turret retracts with an MCO. The Profile operation is used to machine the internal surface of the back side pocket.
- **Machine Control Operation (lower turret retract_1)**
  This operation sets the lower turret to the initial position.

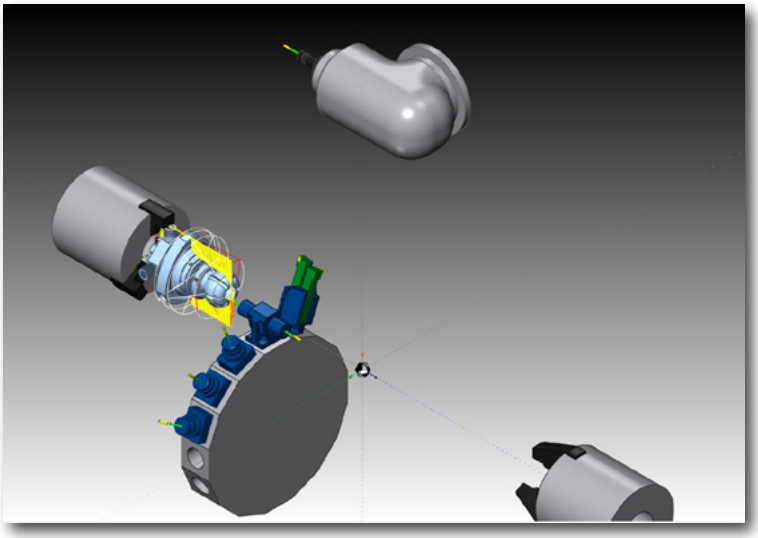

Download the part and machine files

This machine (1str.1rtr.2tb.02) has one spindle turret with the B-axis rotating around Y-axis, one rotary turret with rotation around the Z-axis, tool direction in the X-axis, and two turning tables, while the back spindle has the positive direction of the Z-axis.

The following Mill-Turn and Turning operations are used to perform the machining of the part:

- **Front side turning, milling and drilling (TBR_contour, F_contour2, F_contour4, D_drill, D_drill2, TR_contour3, F_contour6, D_drill1)**
  The Balanced Rough operation is used to machine the model contour with both turrets working simultaneously. Then the lower turret retracts with a Machine Control Operation. A number of milling operations are performed with the upper turret in Positions #1 and #2 of Coordinate System #1. The MCO performs the upper turret withdrawal before switching to machining with the lower turret. A number of turning and milling operations are performed with the lower turret in Positions #1 and #2 of Coordinate System #3. The MCO performs the lower turret withdrawal before the part transfer to the back spindle.
- **Machine Control Operation (part transfer)**
  This operation transfers the part from the main spindle (TB1) to the back spindle (TB2).
- **Turning and back side milling (TBR_contour1, F_contour5, TR_contour8, F_contour10)**
  The Balanced Rough operation is used to machine the model contour with both turrets working simultaneously. Then the lower turret retracts with an MCO. The Profile operation is used to machine the internal surface of the back side pocket.
- **Machine Control Operation (lower turret retract_1)**
  This operation sets the lower turret to the initial position.

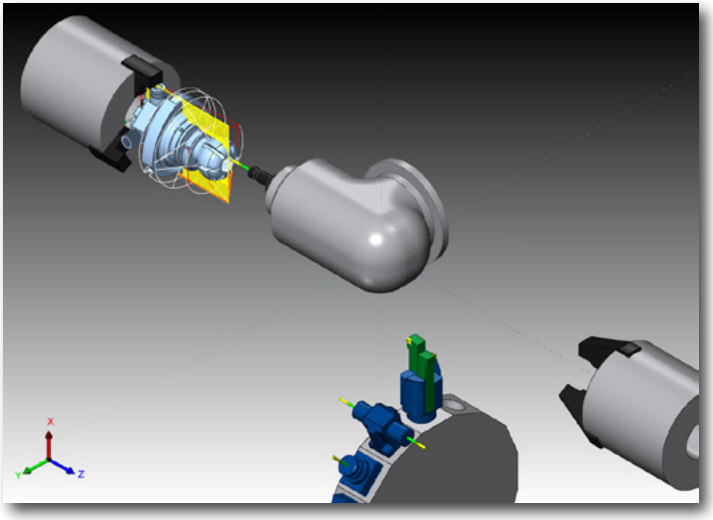

Download the part and machine files

This machine (1str.1rtr.2tb.03) has one spindle turret with the B-axis rotating around Y-axis, one rotary turret with rotation around the Z-axis, tool direction in the Z-axis, and two turning tables, while the back spindle has the negative direction of the Z-axis.

The following Mill-Turn and Turning operations are used to perform the machining of the part:

- **Front side turning, milling and drilling (TBR_contour, F_contour2, F_contour4, D_drill, D_drill2, TR_contour3, F_contour6, D_drill1)**
  The Balanced Rough operation is used to machine the model contour with both turrets working simultaneously. Then the lower turret retracts with a Machine Control Operation. A number of milling operations are performed with the upper turret in Positions #1 and #2 of Coordinate System #1. The MCO performs the upper turret withdrawal before switching to machining with the lower turret. A number of turning and milling operations are performed with the lower turret in Positions #1 and #2 of Coordinate System #3. The MCO performs the lower turret withdrawal before the part transfer to the back spindle.
- **Machine Control Operation (part transfer)**
  This operation transfers the part from the main spindle (TB1) to the back spindle (TB2).
- **Turning and back side milling (TBR_contour1, F_contour9, TR_contour8, F_contour11)**
  The Balanced Rough operation is used to machine the model contour with both turrets working simultaneously. Then the lower turret retracts with an MCO. The Profile operation is used to machine the internal surface of the back side pocket.
- **Machine Control Operation (lower turret retract_1)**
  This operation sets the lower turret to the initial position.

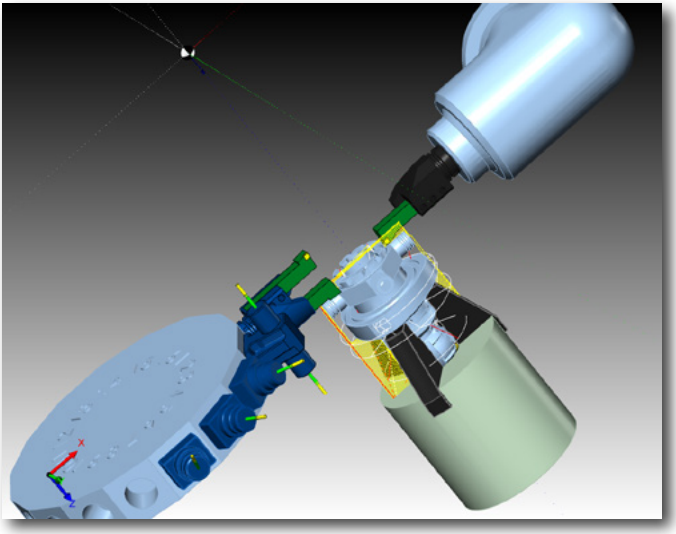

Download the part and machine files

This machine (1str.1rtr.2tb.04) has one spindle turret with the B-axis rotating around Y-axis, one rotary turret with rotation around the Z-axis, tool direction in the X-axis, and two turning tables, while the back spindle has the negative direction of the Z-axis.

The following Mill-Turn and Turning operations are used to perform the machining of the part:

- **Front side turning, milling and drilling (TBR_contour, F_contour2, F_contour4, D_drill, D_drill2, TR_contour3, F_contour6, F_contour7, D_drill1)**
  The Balanced Rough operation is used to machine the model contour with both turrets working simultaneously. Then the lower turret retracts with a Machine Control Operation. A number of milling operations are performed with the upper turret in Positions #1 and #2 of Coordinate System #1. The MCO performs the upper turret withdrawal before switching to machining with the lower turret. A number of turning and milling operations are performed with the lower turret in Positions #1 and #2 of Coordinate System #3. The MCO performs the lower turret withdrawal before the part transfer to the back spindle.
- **Machine Control Operation (part transfer)**
  This operation transfers the part from the main spindle (TB1) to the back spindle (TB2).
- **Turning and back side milling (TBR_contour1, F_contour5, TR_contour8, F_contour10)**
  The Balanced Rough operation is used to machine the model contour on the back side with both turrets working simultaneously. Then the lower turret retracts with an MCO. The Profile operation is used to machine the internal surface of the back side pocket.
- **Machine Control Operation (lower turret retract_1)**
  This operation sets the lower turret to the initial position.

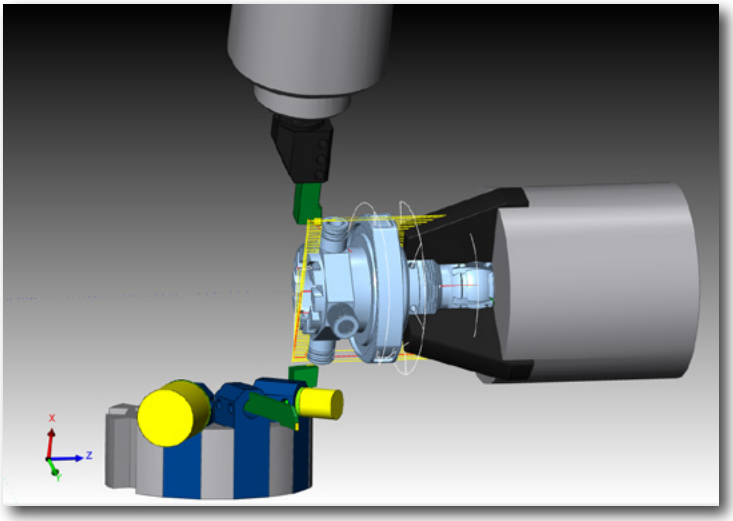

Download the part and machine files

This machine (1str.1rtr.2tb.05) of the Integrex type has one spindle turret with the B-axis rotating around Y-axis, one rotary turret rotated around the X-axis with 20° deviation, tool direction in the Z-axis, and two turning tables, while the back spindle has the positive direction of the Z-axis.

The following Mill-Turn and Turning operations are used to perform the machining of the part:

- **Front side turning, milling and drilling (TBR_contour, F_contour2, F_contour4, D_drill, D_drill2, TR_contour3, DRILL , F_contour6)**
  The Balanced Rough operation is used to machine the model contour with both turrets working simultaneously. Then the lower turret retracts with a Machine Control Operation. A number of milling operations are performed with the upper turret in Positions #1 and #2 of Coordinate System #1. The MCO performs the upper turret withdrawal before switching to machining with the lower turret. A number of turning and milling operations are performed with the lower turret in Positions #1 and #2 of Coordinate System #3. The MCO performs the lower turret withdrawal before the part transfer to the back spindle.
- **Machine Control Operation (part transfer)**
  This operation transfers the part from the main spindle (TB1) to the back spindle (TB2).
- **Turning and back side milling (TBR_contour1, F_contour5, TR_contour8, DRILL_1, TR_contour7)**
  The Balanced Rough operation is used to machine the model contour with both turrets working simultaneously. Then the lower turret retracts with an MCO. The Profile operation is used to machine the internal surface of the back side pocket. The Turning and Drill operations are used to machine the back face, drill a hole and finish the internal pocket floor.
- **Machine Control Operation (lower turret retract_1)**
  This operation sets the lower turret to the initial position.

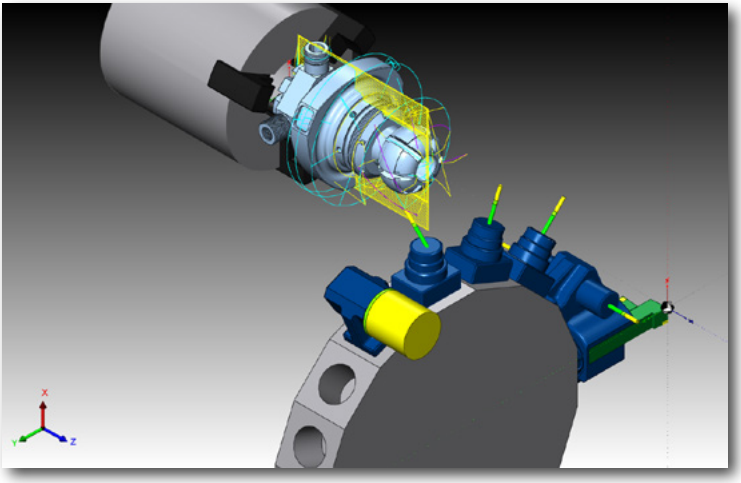

Download the part and machine files

This machine (1str.1rtr.2tb.06) of the NTX1000 type has one spindle turret with the B-axis rotating around Y-axis, one rotary turret with rotation around the Z-axis, tool direction in the X-axis, and two turning tables, while the back spindle has the positive direction of the Z-axis and B-axis.

The following Mill-Turn and Turning operations are used to perform the machining of the part:

- **Front side turning, milling and drilling (TBR_contour, 5X_Proj_faces, F_contour2, F_contour4, D_drill, D_drill2, 5X_Drill_drill_5x, TR_contour3, F_contour6, D_drill1, D_drill3)**
  The Balanced Rough operation is used to machine the model contour with both turrets working simultaneously. Then the lower turret retracts with a Machine Control Operation. The 5-axis operation is used to machine the grooves on the bulb, with the Projection strategy chosen. A number of milling operations are performed with the upper turret in Positions #1 and #2 of Coordinate System #1. The Multiaxis drilling operation is used to drill the holes located on the model surfaces. The MCO performs the upper turret withdrawal before switching to machining with the lower turret. A number of turning and milling operations are performed with the lower turret in Positions #1 and #2 of Coordinate System #3. The MCO performs the lower turret withdrawal before the part transfer to the back spindle.
- **Machine Control Operation (part transfer)**
  This operation transfers the part from the main spindle (TB1) to the back spindle (TB2).
- **Turning and back side milling (TBR_contour1, F_contour5, TR_contour8, F_contour10, DRILL)**
  The Balanced Rough operation is used to machine the model contour with both turrets working simultaneously. Then the lower turret retracts with an MCO. The Profile operation is used to machine the internal surface of the back side pocket.
- **Machine Control Operation (lower turret retract_1)**
  This operation sets the lower turret to the initial position.

SolidCAM + SolidWorks

The complete integrated Manufacturing Solution

SolidCAM

iMachining – The Revolution in CAM!

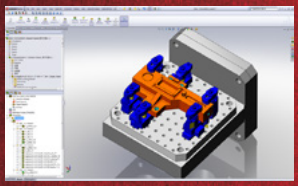

2.5D Milling

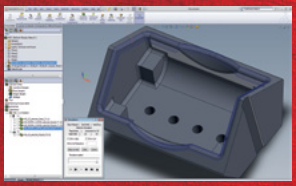

HSS (High-Speed Surface Machining)

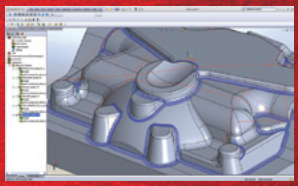

HSM (High-Speed Machining)

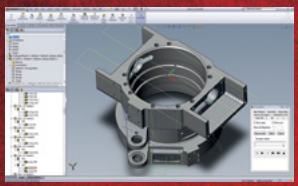

Indexed Multi-Sided Machining

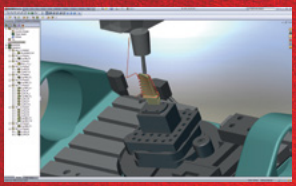

Simultaneous 5-Axis Machining

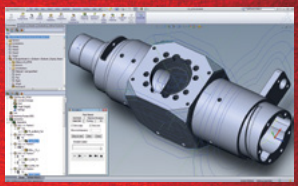

Turning and Mill-Turn up to 5-Axis

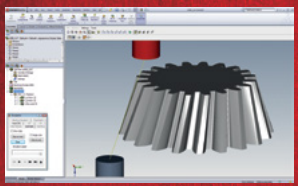

Wire EDM

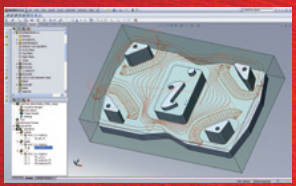

iMachining

Service and Support

YouTube Broadcast Yourself™

www.youtube.com/SolidCAMProfessor
www.youtube.com/SolidCAMiMachining

www.facebook.com/SolidCAM

www.solidcam.com