iMachining in NX

Download Brochure

iMachining in NX

The unique, revolutionary Milling Technology for NX

iMachining®

patent by SolidCAM

- Saves 70% and More in CNC Machining Time
- Drastically Extends Cutting Tool Life
- Avoids Guesswork: Optimum CNC Settings with the Unique iMachining Technology Wizard
- Immense Savings in Programming Time

Customers Reaction to iMachining: "Simply Amazing"

"My hope is that not too many people learn about iMachining because it is my biggest competitive edge!"

Greg Burns | Burns Machinery

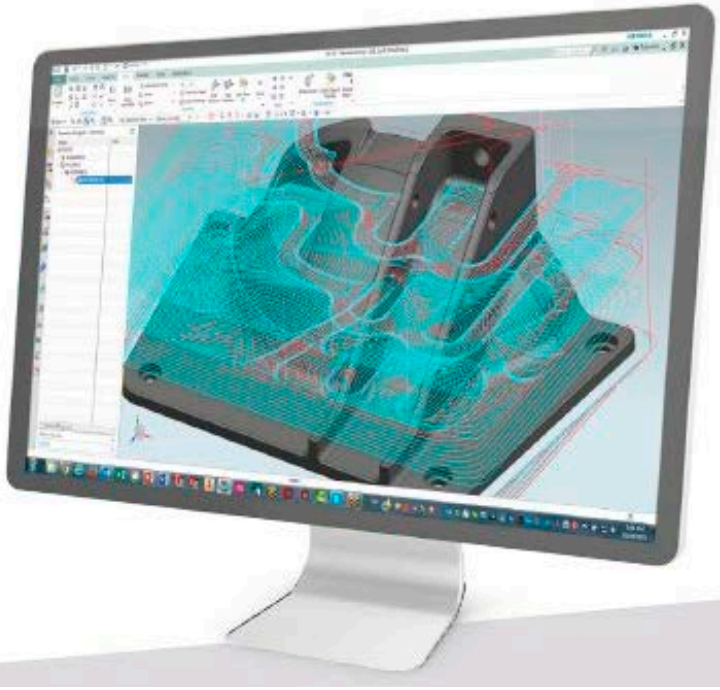

iMachining in NX

The unique, revolutionary Milling Technology for NX

iMachining®

patent by SolidCAM

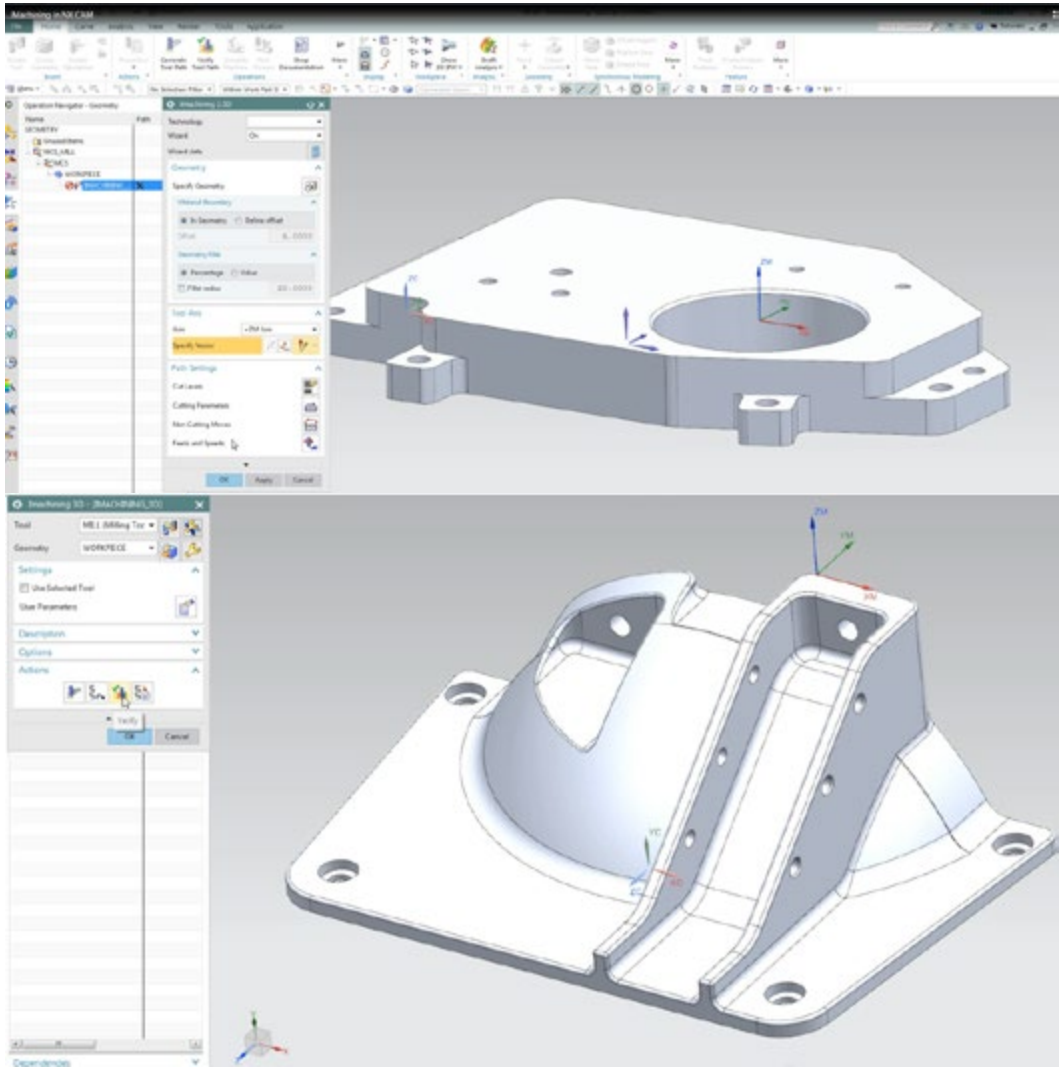

Seamless Integration of iMachining in NX

- The proven iMachining technology is now available as an integrated plugin for NX.
- CAM users can now insert iMachining operations directly inside NX CAM, using all NX functionality.

iMachining 2D in NX

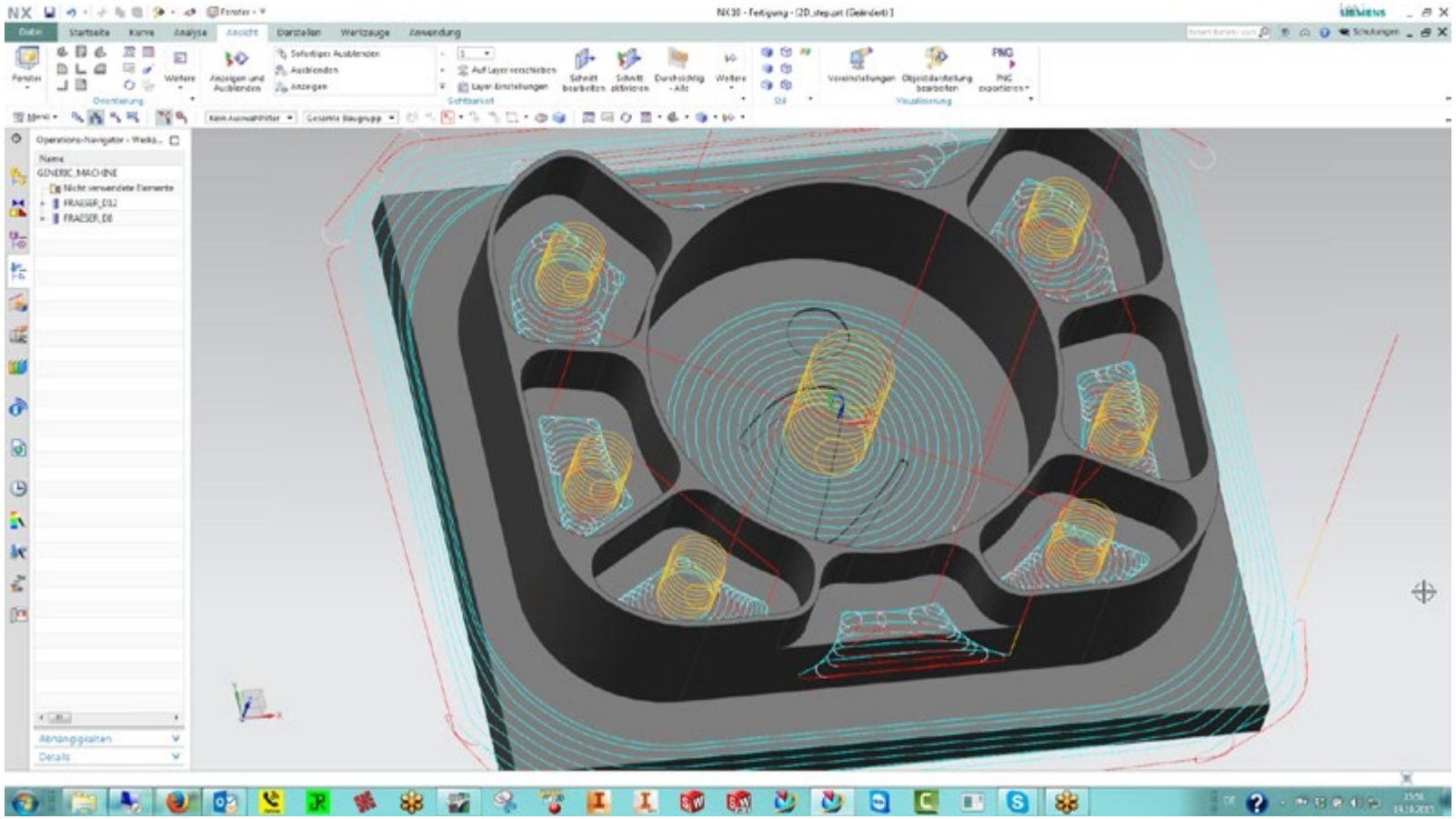

iMachining 3D in NX

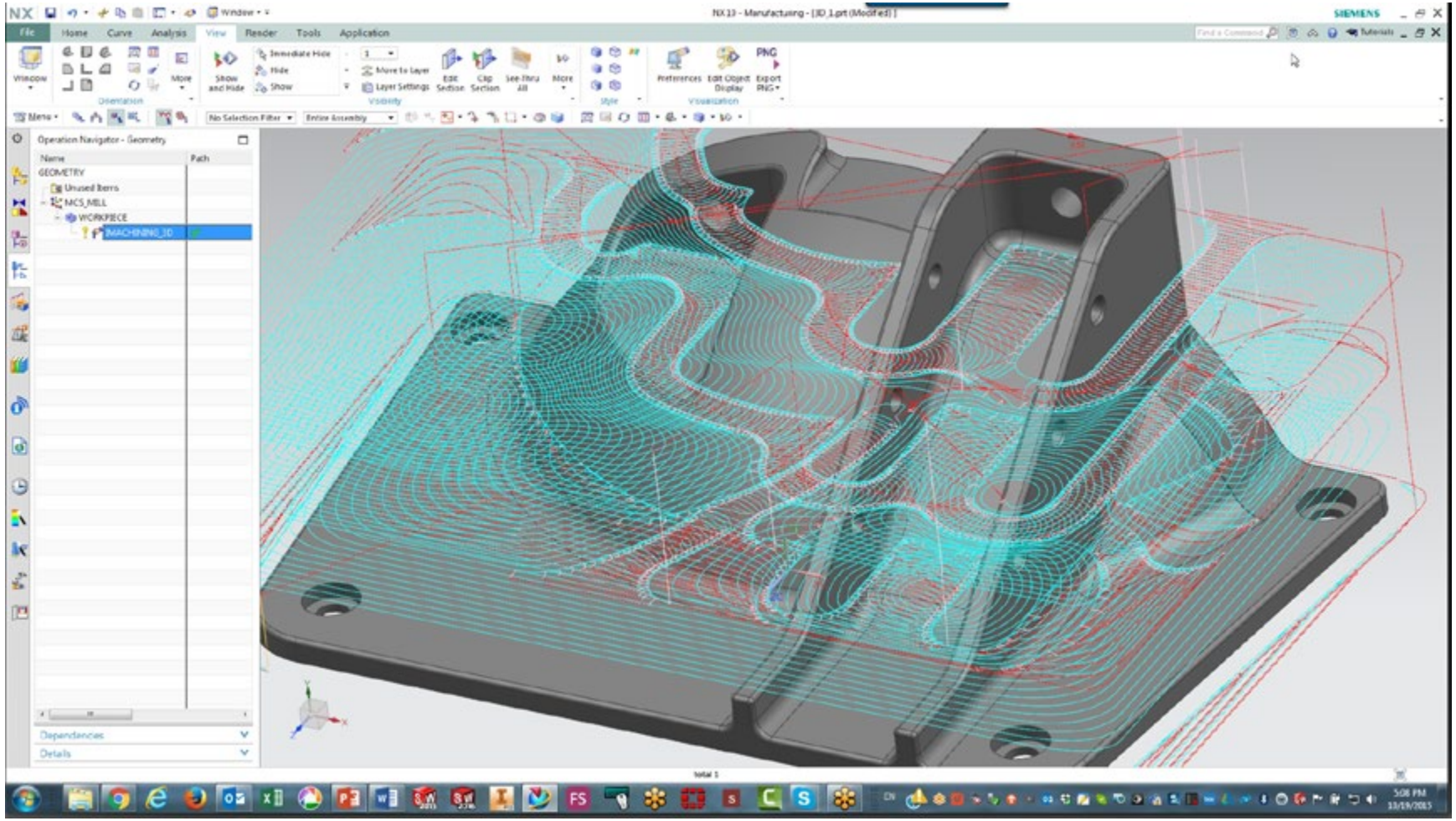

iMachining 3D in NX

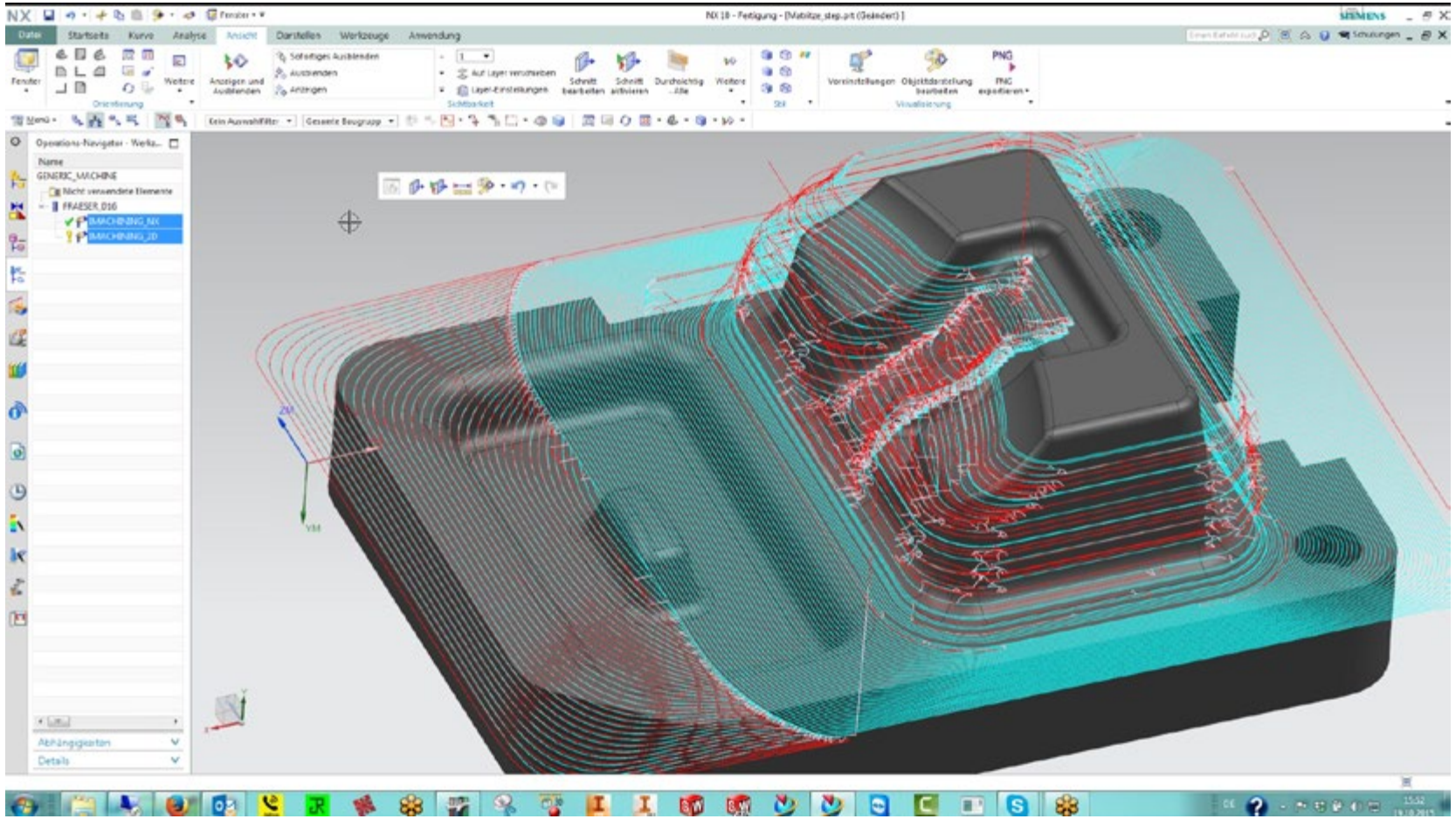

iMachining 3D in NX

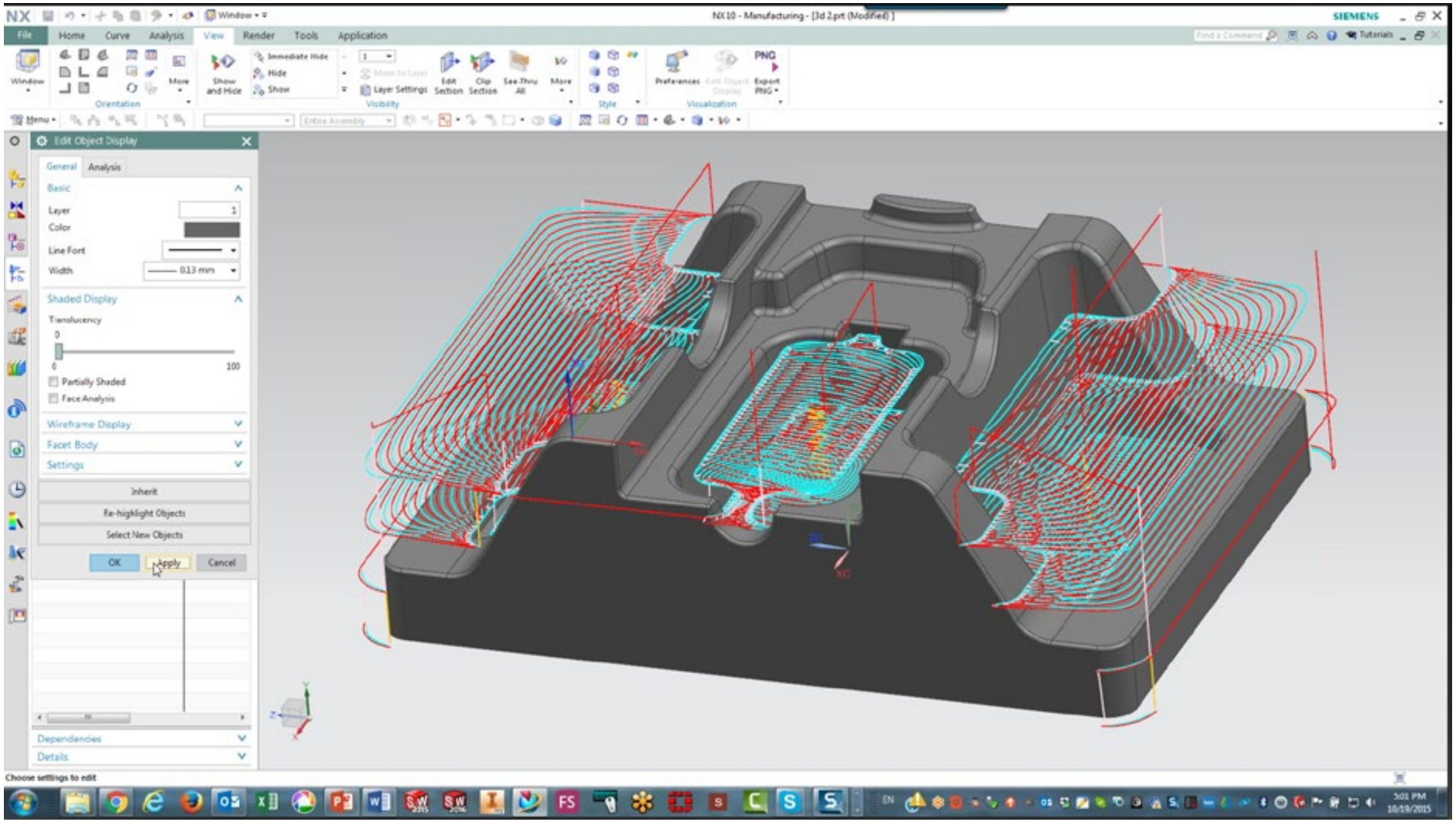

Revolutionary iMachining module – unbelievable savings in cycle time and tool life!

The unique, revolutionary Milling technology

iMachining®

patent by SolidCAM

TIME SAVINGS

70%

... AND MORE!

iMachining 2D

iMachining 3D

iMachining 2D – The revolution in CNC Machining

- Increased productivity due to shorter cycles – time savings 70% and more!
- Dramatically increased tool life
- Unmatched hard material machining
- Outstanding small tool performance
- 4-Axis and Mill-Turn iMachining
- High programming productivity
- Shortest learning curve in the Industry

iMachining Wizard + iMachiningToolpath = The Ultimate Solution!

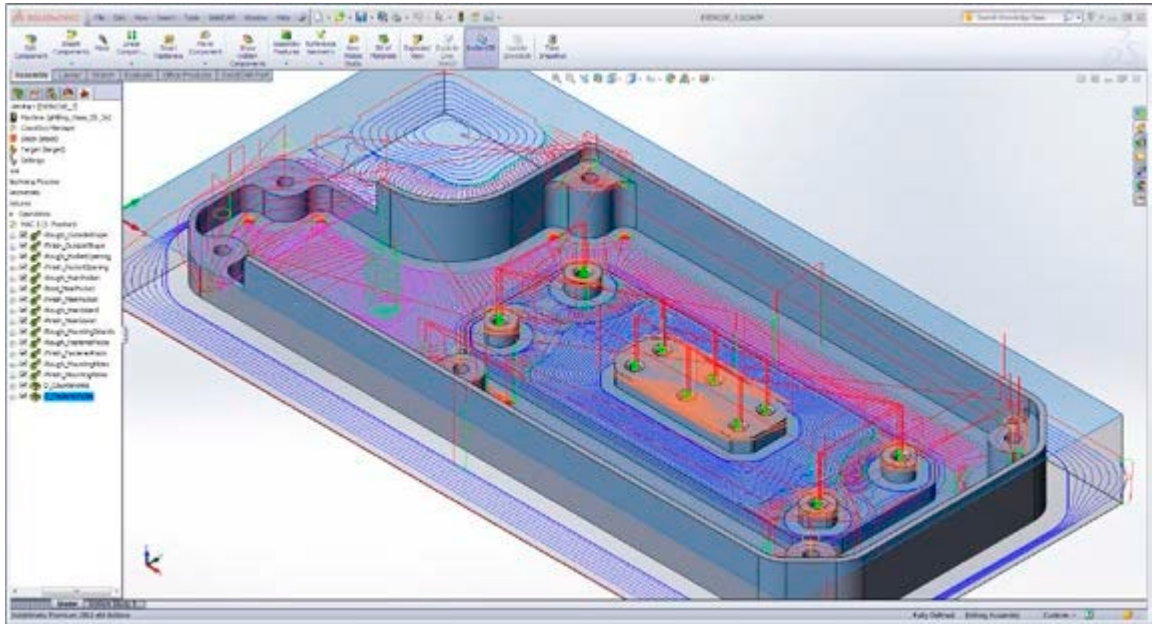

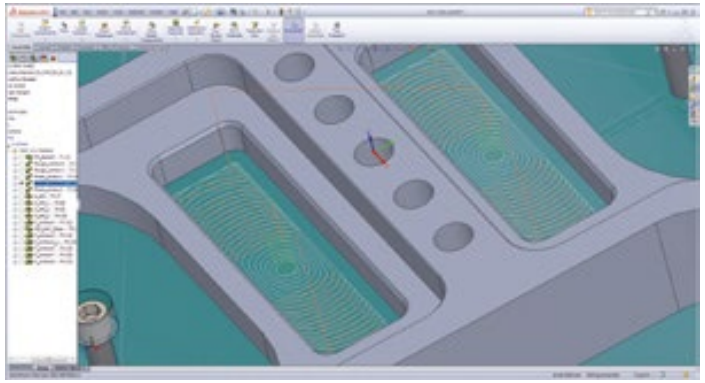

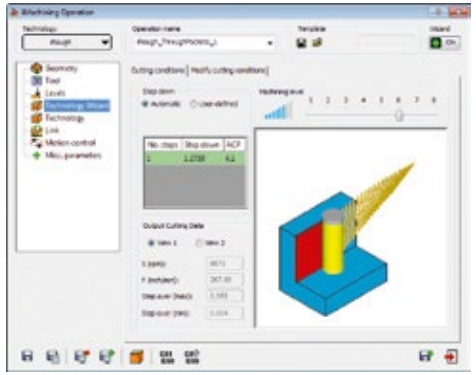

- The unique Technology Wizard provides optimal feeds and speeds, taking into account the toolpath, stock and tool material as well as machine specifications.

>> More info

iMachining 2D – The revolution in CNC Machining

iMachiningToolpath + iMachining Wizard = The Ultimate Solution!

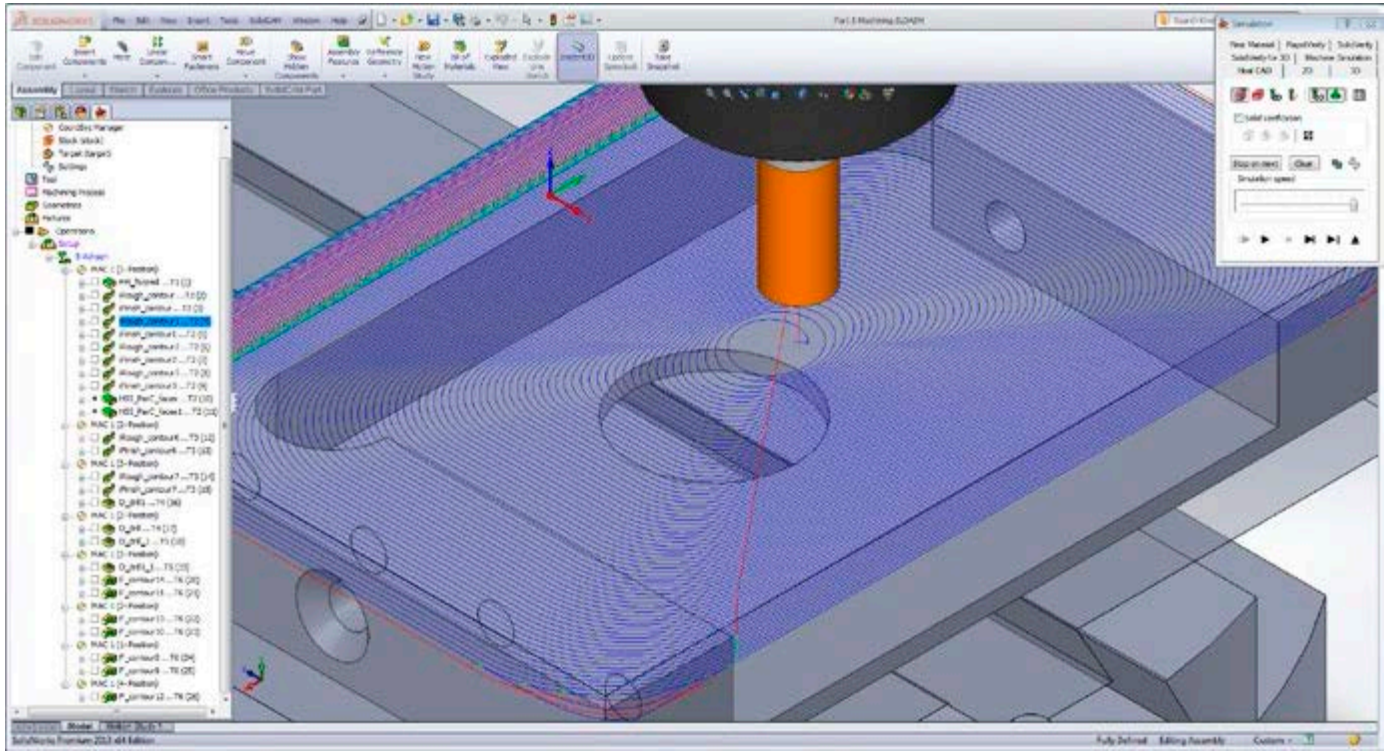

+

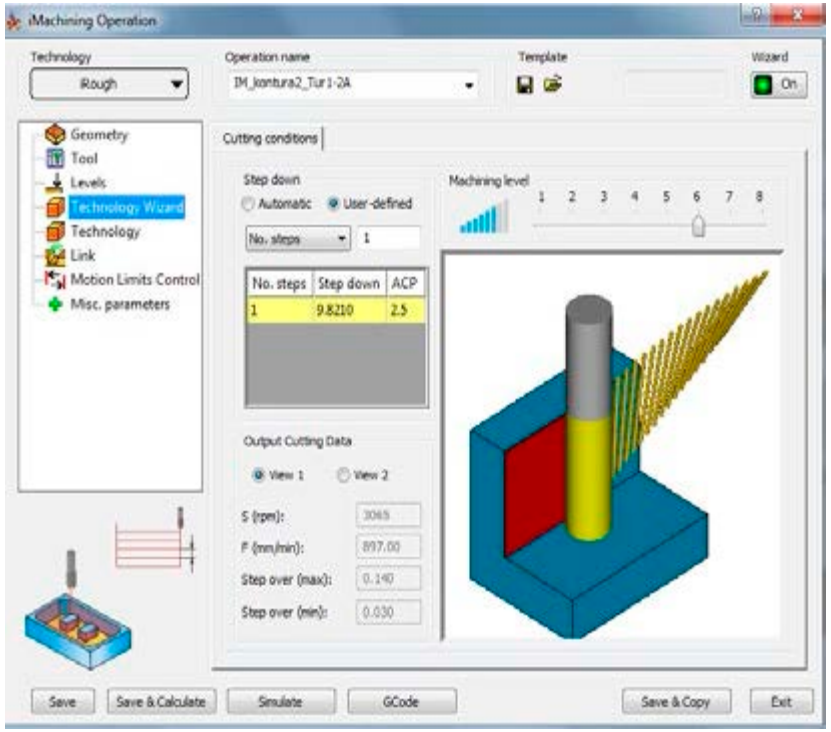

[>> More info]

iMachining Two Modules

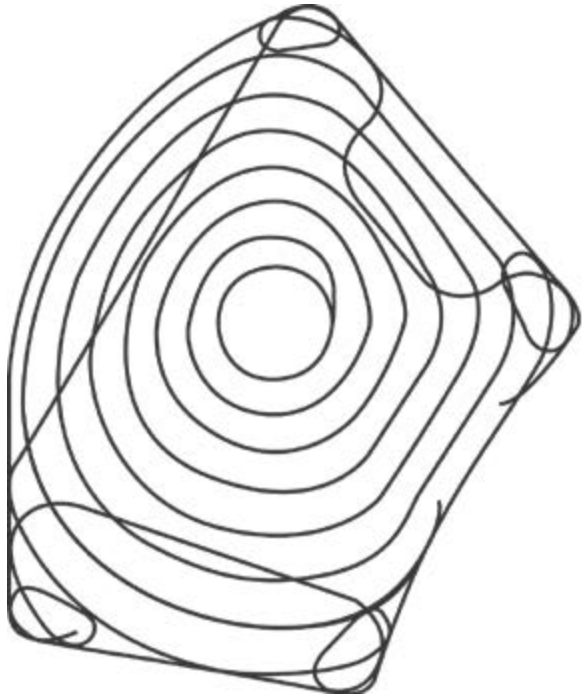

Intelligent Tool Path Generator

Calculates efficient, tangential tool paths which ensure constant mechanical tool load

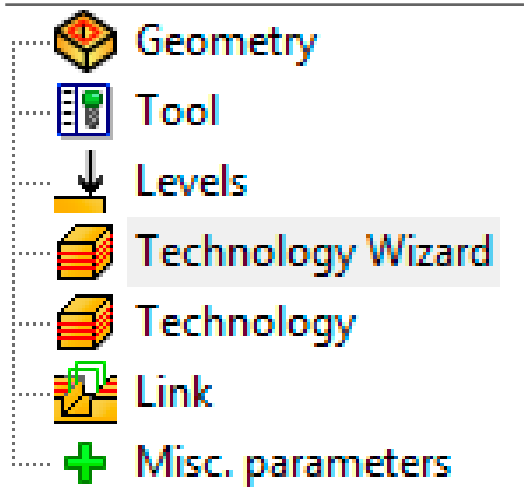

Technology Wizard

Calculates the cutting conditions for a given machining operation

3 Problems with Standard Tool Paths

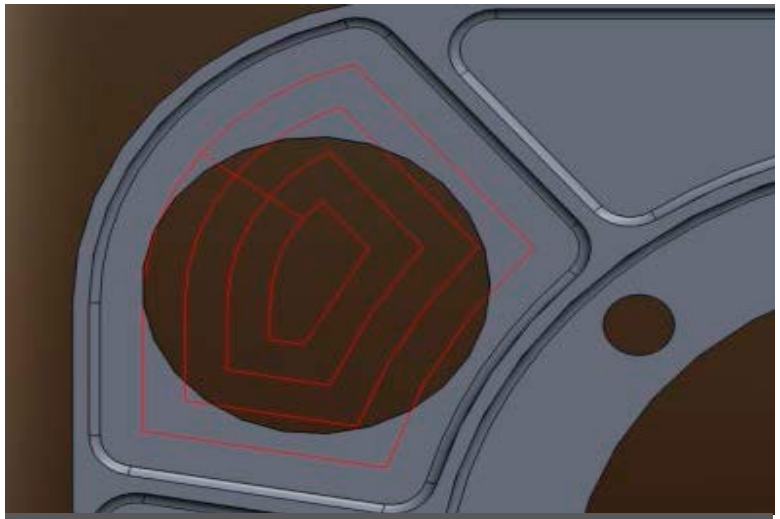

Non Tangent Tool Paths

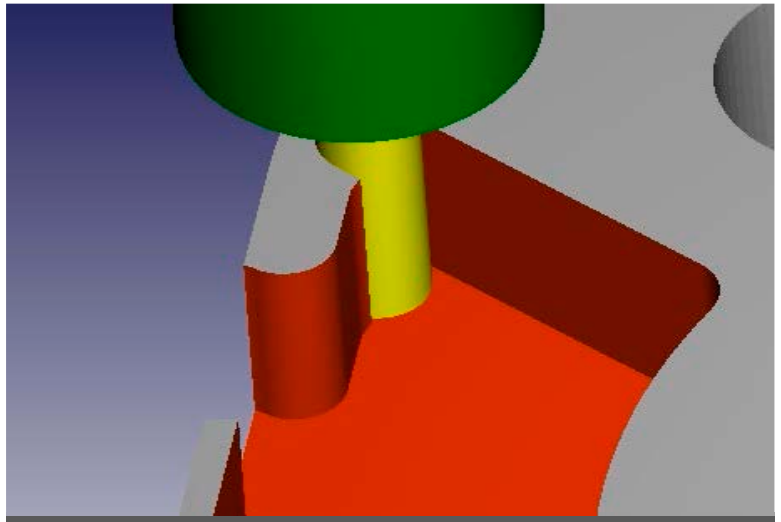

Over Loaded Tools

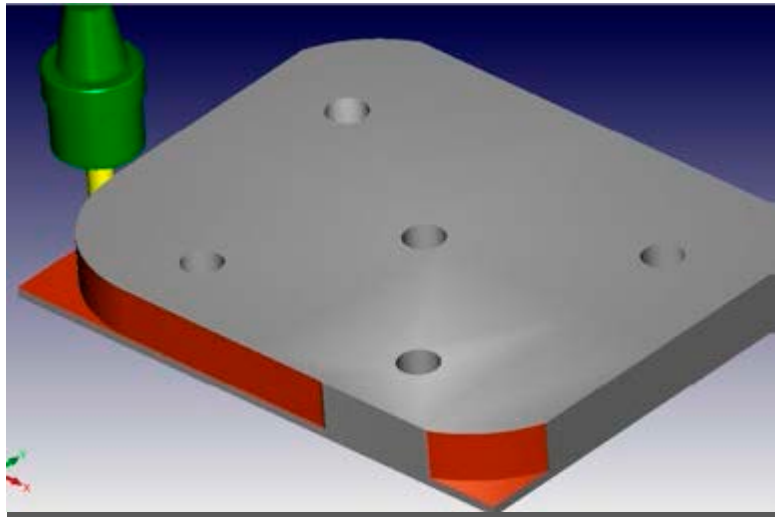

Cutting Air

Standard Offset Tool paths

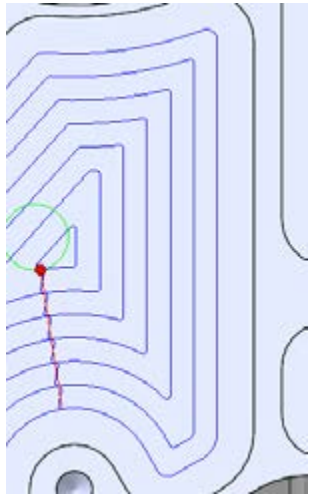

- With **traditional fixed "step-over" offset tool path**, the cutting tool "steps over" a fixed amount to cut the next row of material - this creates **areas where the tool is subjected to heavy forces, especially in tight corners.**

- **CNC operators had to slow down** the cutting operations and take **very shallow cuts** to **minimize cutting tool breakage and wear in these high stress areas.**

- The **slow speed of the cut** and the **shallow depth of the cutter**, are ***set for the entire process -*** so the impact of even just a few problematic areas could **severely slow the entire process down** and cause **high rates of tool wear**.

- This also greatly **lessens cutter life** as only a **small percentage of the bottom of the cutter is used during shallow cuts.**

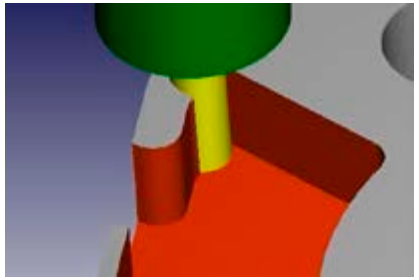

iMachining's Intelligent Tool Path

The unique, revolutionary Milling Technology

imachining®

patent by SolidCAM

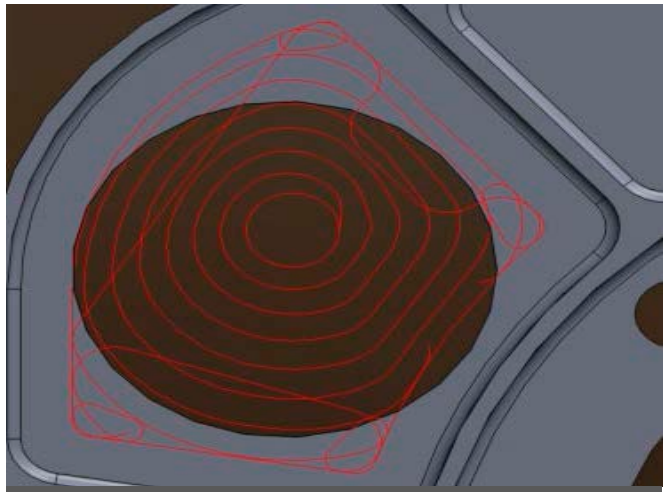

Smooth Tangent Tool Paths
(Smooth Machining)

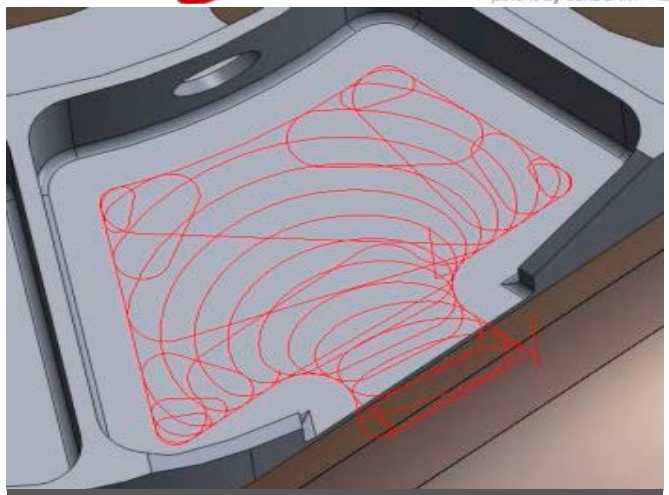

Controlled Step Overs (no over loading the tool)

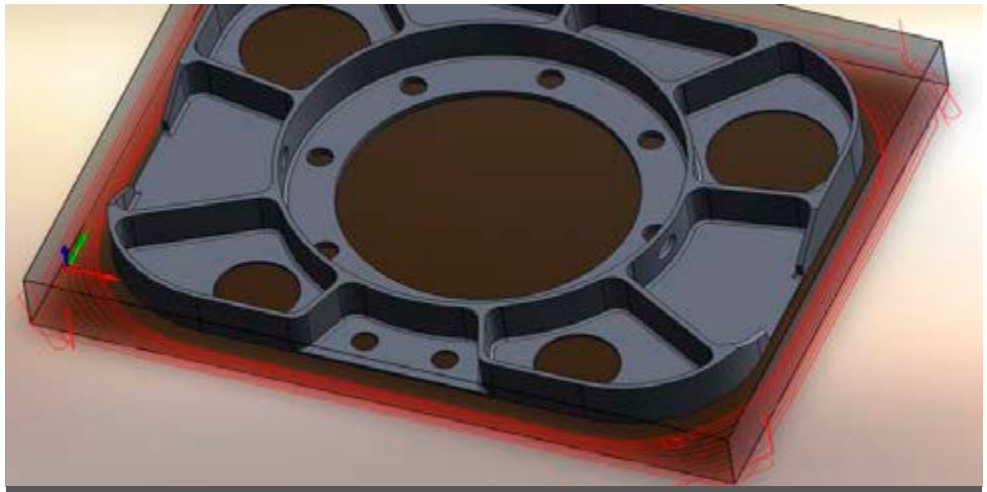

Exact Stock Machining
(no air cutting)

iMachining Intelligent Tool path – Manage Cutting Angle

- **First**, iMachining intelligent tool paths **manage the cutting angle** *(section of tool engaged with the stock material)*.

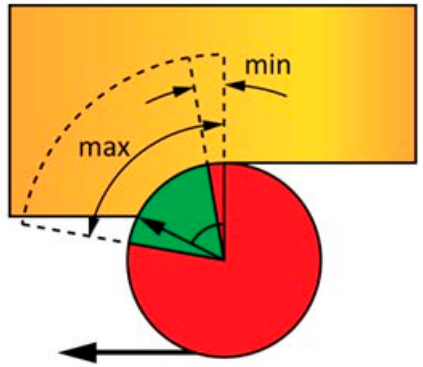

  - When the cutting angle is properly controlled throughout the entire cut, the result **minimizes the forces on the tool**, allowing the tool to **cut much deeper** without excessive wear or breakage.
  - **Deeper cuts**, using all of the cutting tool length, require **far fewer passes**, greatly **reducing the cycle time of the part.**

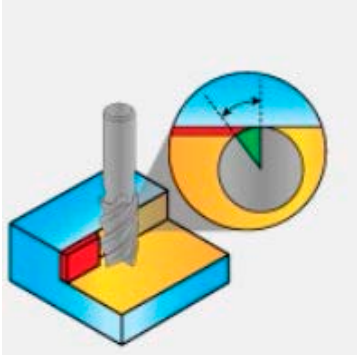

  - Also, since the **entire cutting tool length is used**, tools are no longer replaced with only a small percentage of the bottom of the cutting tool used - **Cutting Tool life dramatically increases** to many times that of a cutting tool used in a Traditional tool path.
  - Another major benefit is the ability to **use small cutting tools**, even for really hard materials

iMachining Intelligent Tool paths – Manage the Feed Rate

- **<u>Second</u>**, iMachining Intelligent Tool Paths **manage the "Feed Rate"**

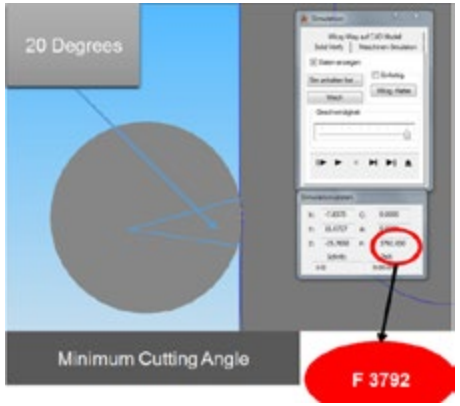

  - In iMachining, since the **Cutting angle maybe constantly changing** (morphing Spiral)**, the Feed Rate is adjusted** in a manner that keeps a **constant Chip Thickness**.

  - This reduces or **eliminates the uneven loading forces on the tool,** that significantly reduce the life of the Cutting Tool - by having a **constant and reduced load on the tool**, tool life is greatly increased.

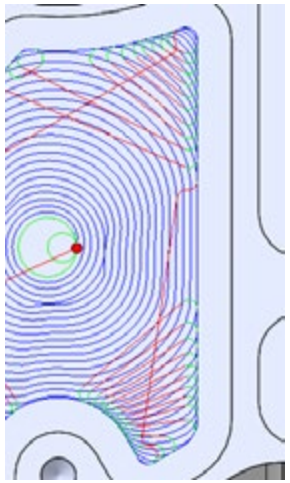

iMachining Intelligent Tool paths – Manage repositioning

- **<u>Third</u>**, iMachining Intelligent Tool Paths **manage the "Cutting Tool Repositioning"**
  - With Standard tool paths, the cutting tool is often raised back to a starting point for each repositioning to the next cut entry location.
  - iMachining **keeps track accurately of the material already cut** and generates the **next tool path to cut from where material still remains,** keeping the cutting tool in contact with the material for as long as possible through the entire cut.
  - As a result, **unnecessary moves** and "**cutting air**" are eliminated, resulting in much faster cycle times

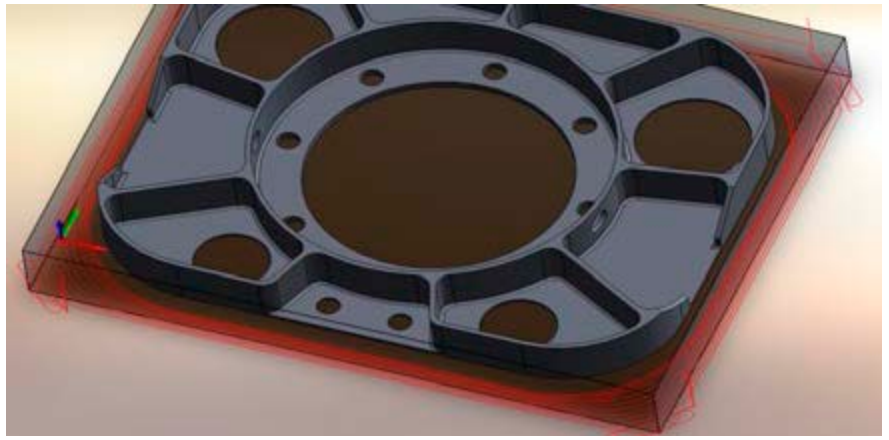

Unique patented iMachining features: Min & Max Cutting Angles & Variable Feed

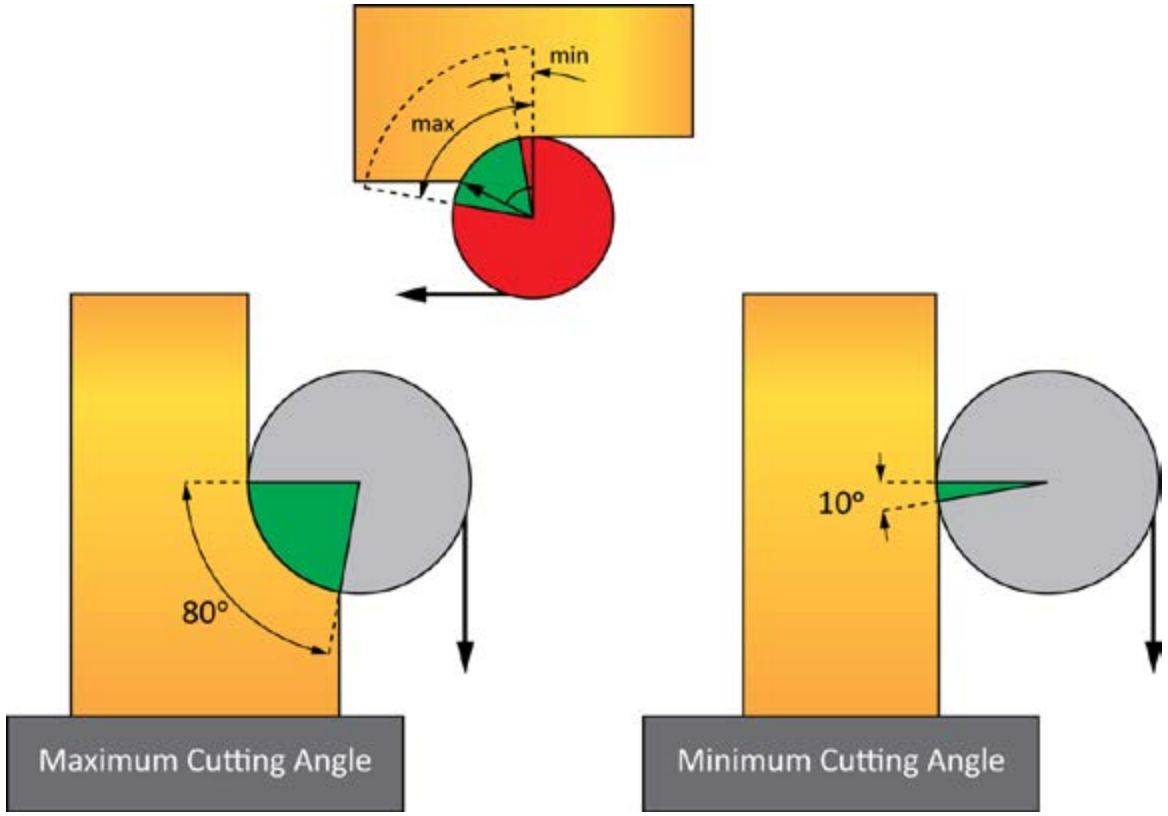

Variable Cutting angle

Tool path calculated to keep cutting angle between minimum and maximum specified by wizard

Variable feed to keep Constant Cutting force

Maintain constant cutting force by automatic feed adjustment for varying width of cut

Variable feed to keep constant cutting force

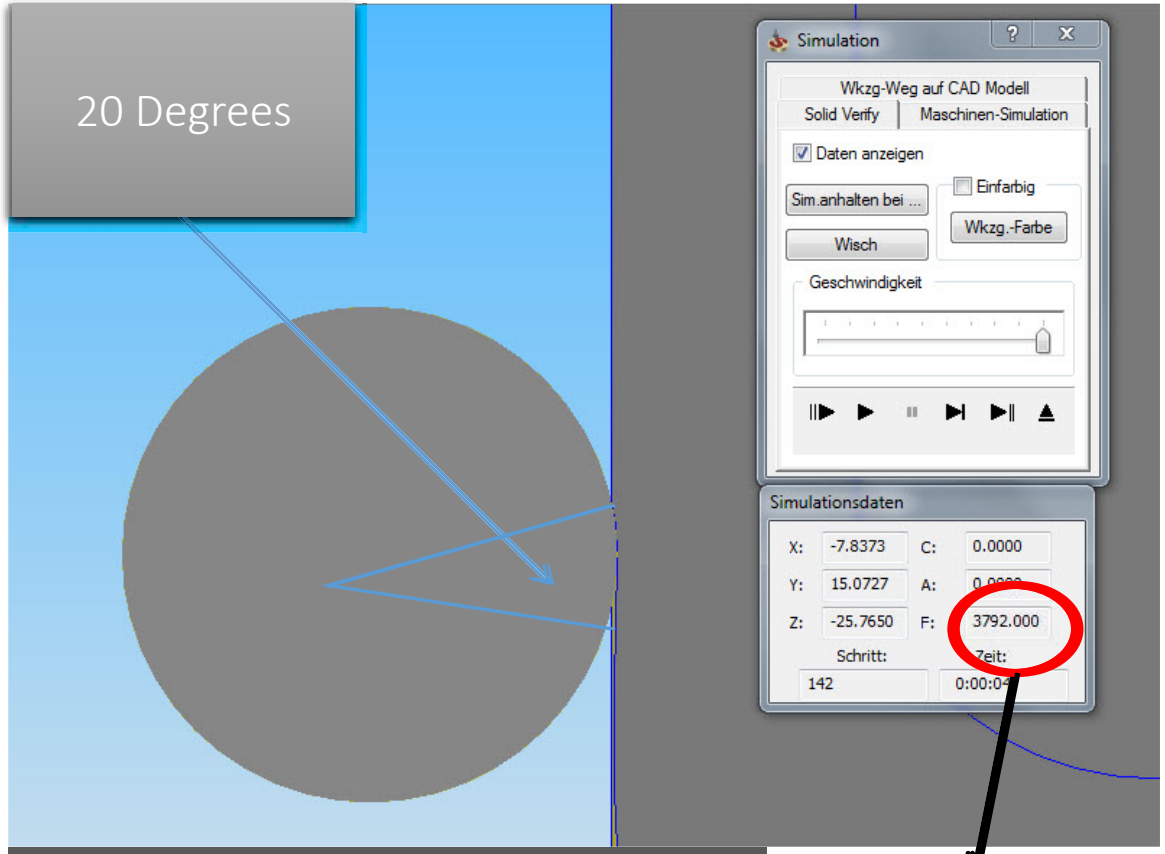

Minimum Cutting Angle

F 3792

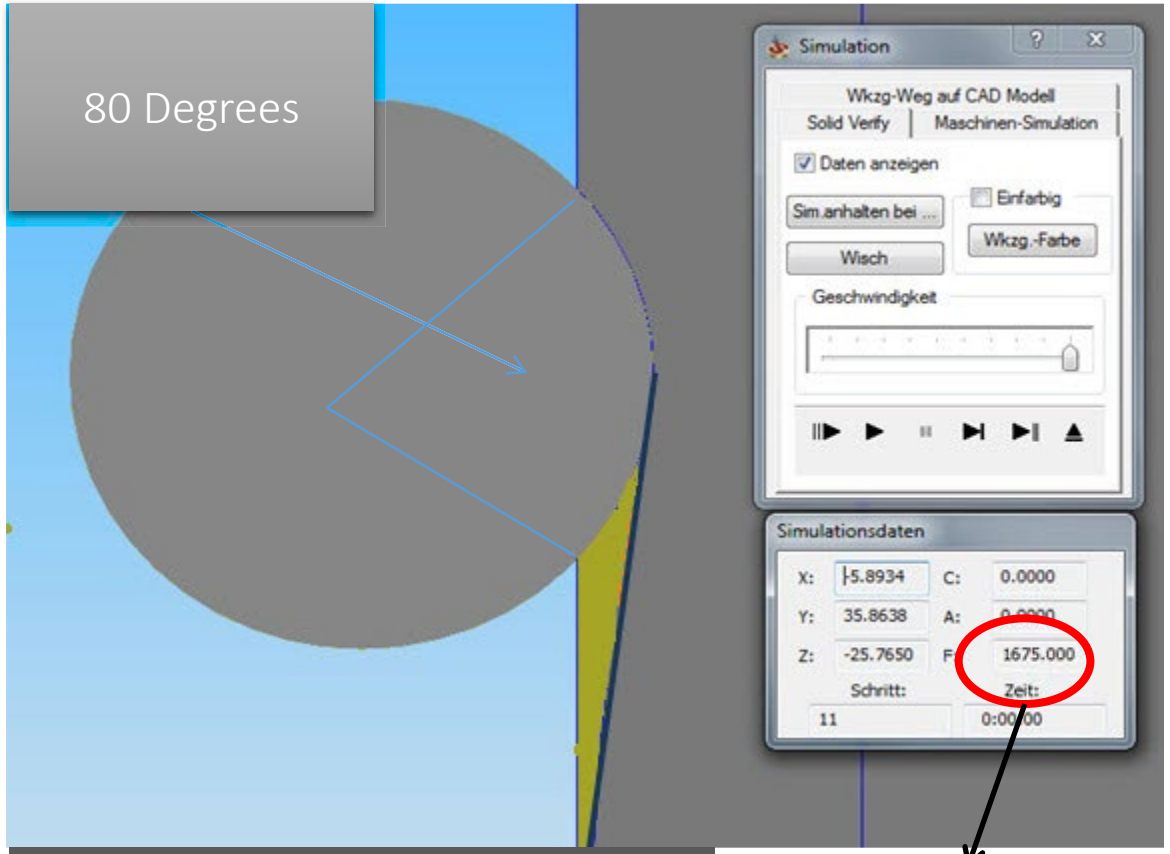

Maximum Cutting Angle

F 1675

2 Additional patented unique Features in iMachining

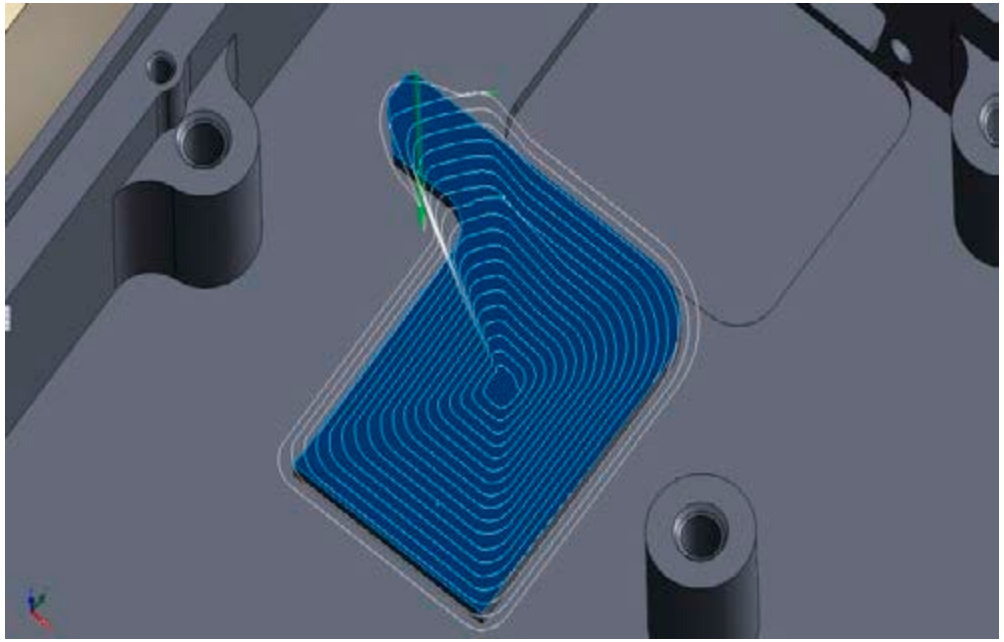

Morphing Spirals Only in iMachining!

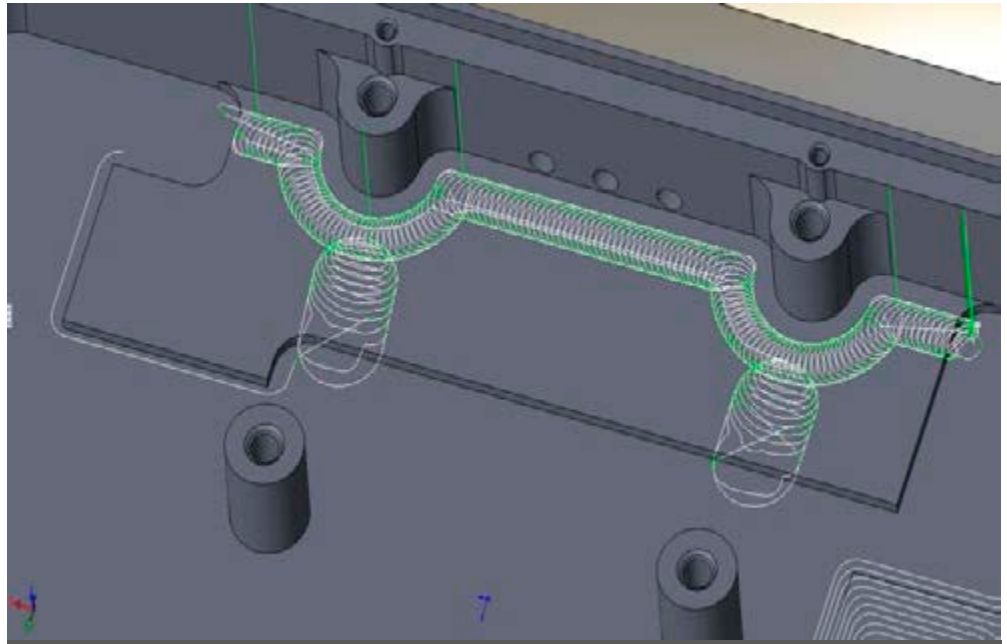

Intelligent Separation only in iMachining!

- ❑ Morphing spirals with varying width of cut
- ❑ Separates areas with channels to maximize spiral area

Morphing Spirals After Separation

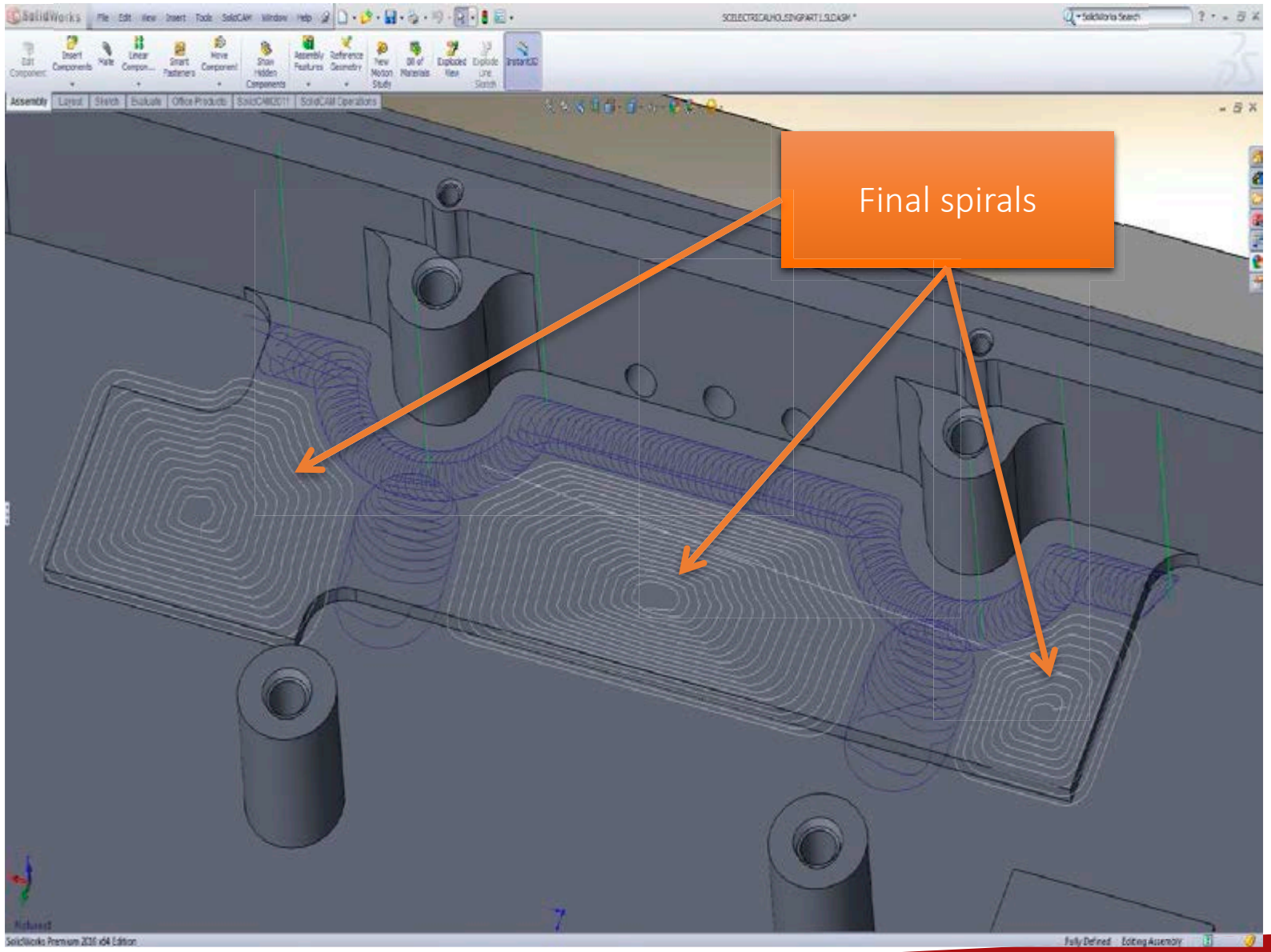

Spiral Efficiency

- iMachining generates **Morphing spiral tool paths** whenever it needs to clear a **completely open** or **closed pocket** area, which does not have the shape of a circle - it generates tool paths with **different side steps** in **different directions**

- The **Spiral Efficiency slider** enables the user to **control the efficiency of the spiral tool paths**

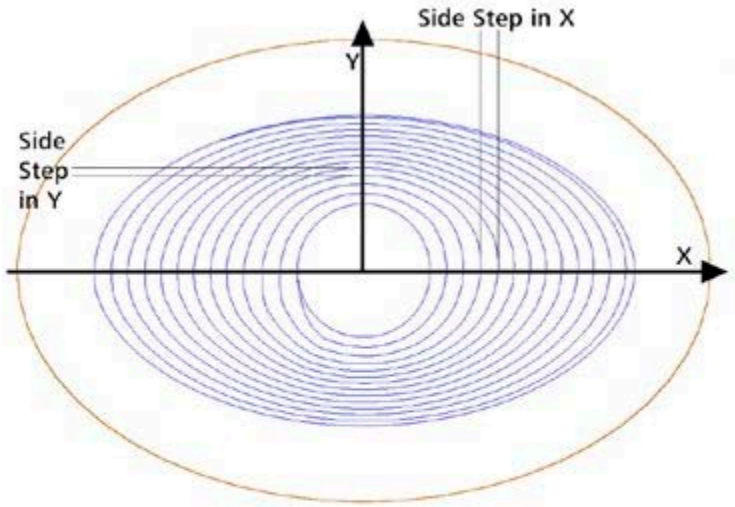

Figure 1A: Low efficiency setting:
Spiral with strong morphing clears complete area

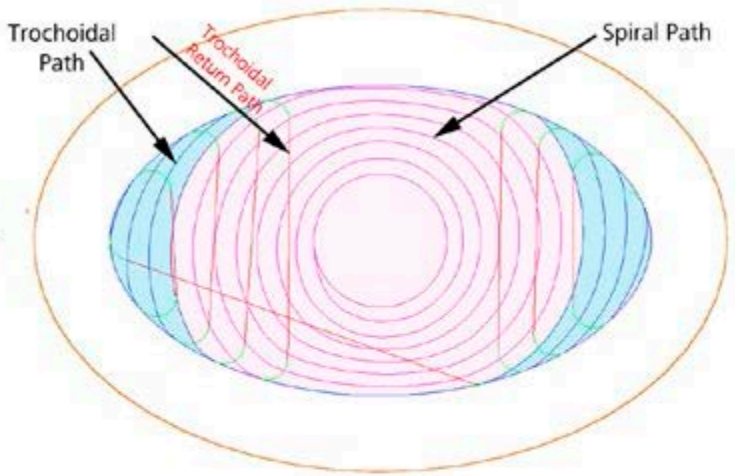

Figure 1B: High efficiency setting:
Spiral with little morphing is rounder and clears only part of area, the rest is cleared by a Trochoidal Path

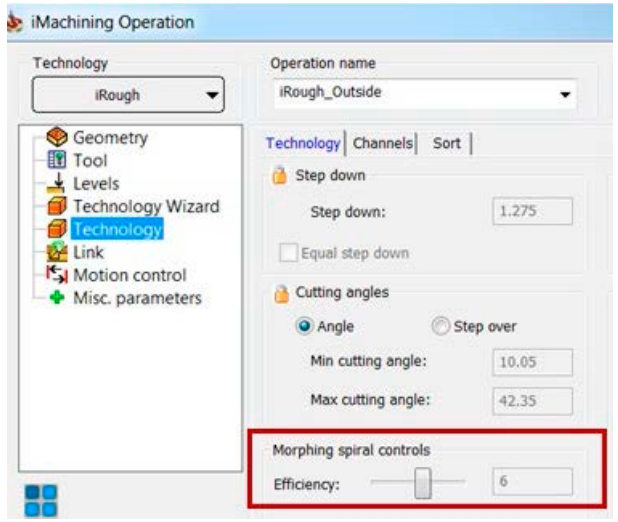

Spiral Efficiency

- A **continuous spiral cut causes less wear on the tool than Trochoidal-style** cuts, with their associated lead ins and lead outs from the material.

- **Increasing efficiency** *reduces the variation of the side step permitted in the spiral*, making the side steps in all directions more equal and accordingly **producing a rounder spiral, looking more like a circle.**

- **Decreasing efficiency** allows iMachining to *use more of the side step range specified by the Wizard*. This produces a **spiral, which looks less like a circle and covers a greater part of the area**, by *morphing itself into the narrower parts of the area*.

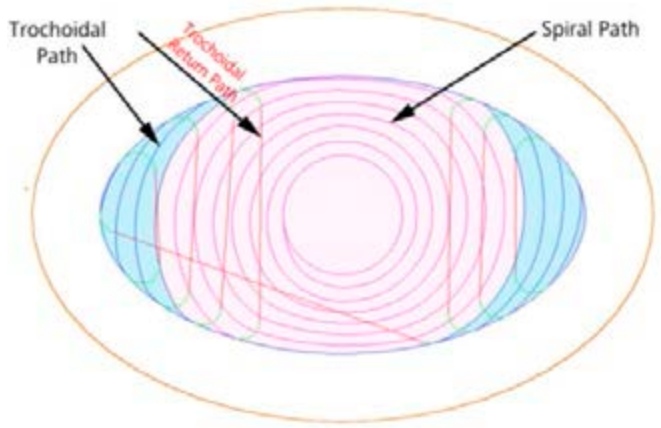

Increased Efficiency - Rounder Spiral

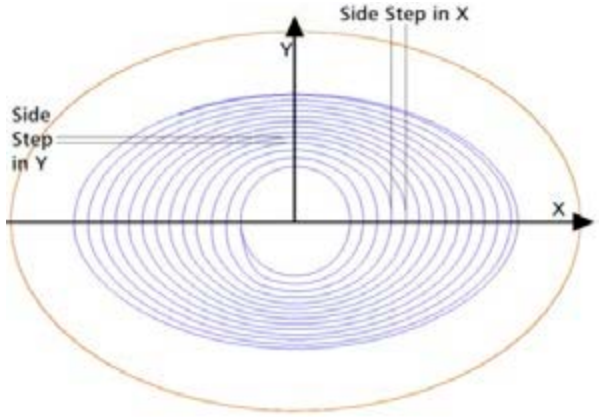

Decreased Efficiency

Spiral Efficiency

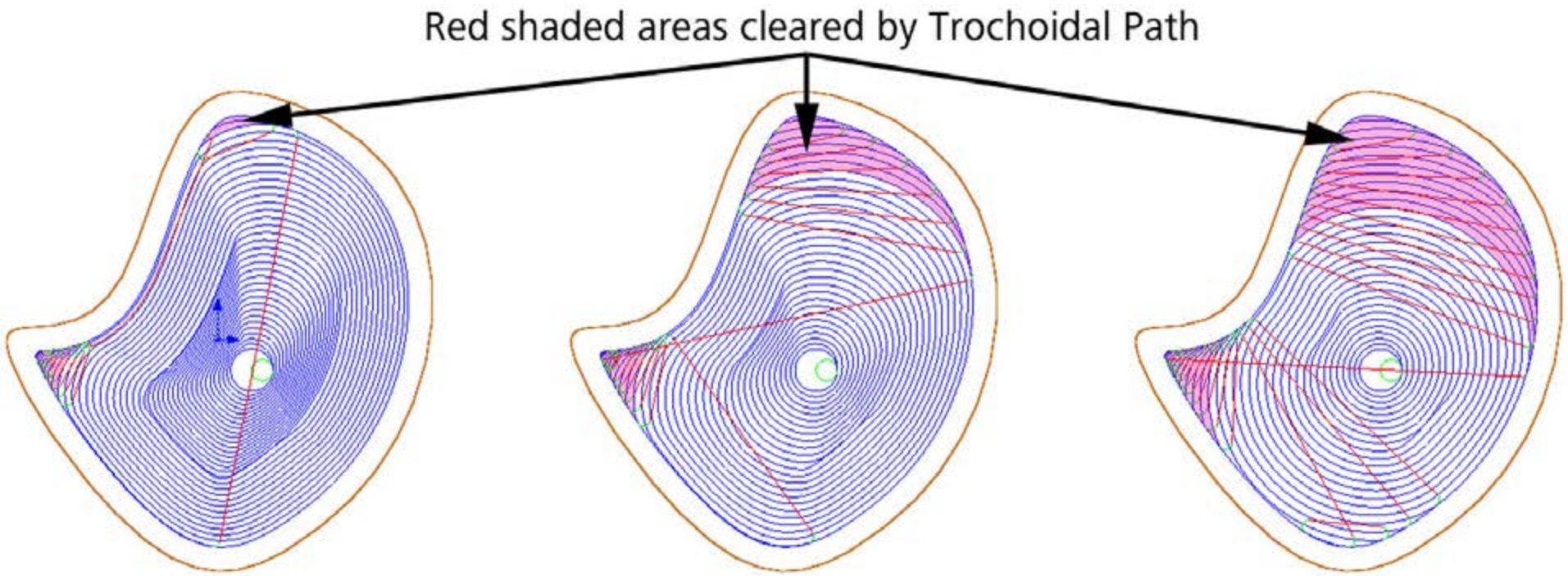

Figure 2A
Efficiency level 1

Figure 2B
Efficiency level 5

Figure 2C
Efficiency level 10

Figure 2: Same pocket cut with 3 different spiral efficiency settings

Why does iMachining need Channels and Moats?

- **Channels** and **Moats** are *unique features* of iMachining.
- They are designed to enable the Tool path generator to **divide the area of a pocket into *sub-areas*.**
- This division is done in such a way that **most of the total area can be removed using iMachining's unique morphing spirals**, rather than with trochoidal-style tool paths, thus **reducing cycle time** and **extending tool life.**

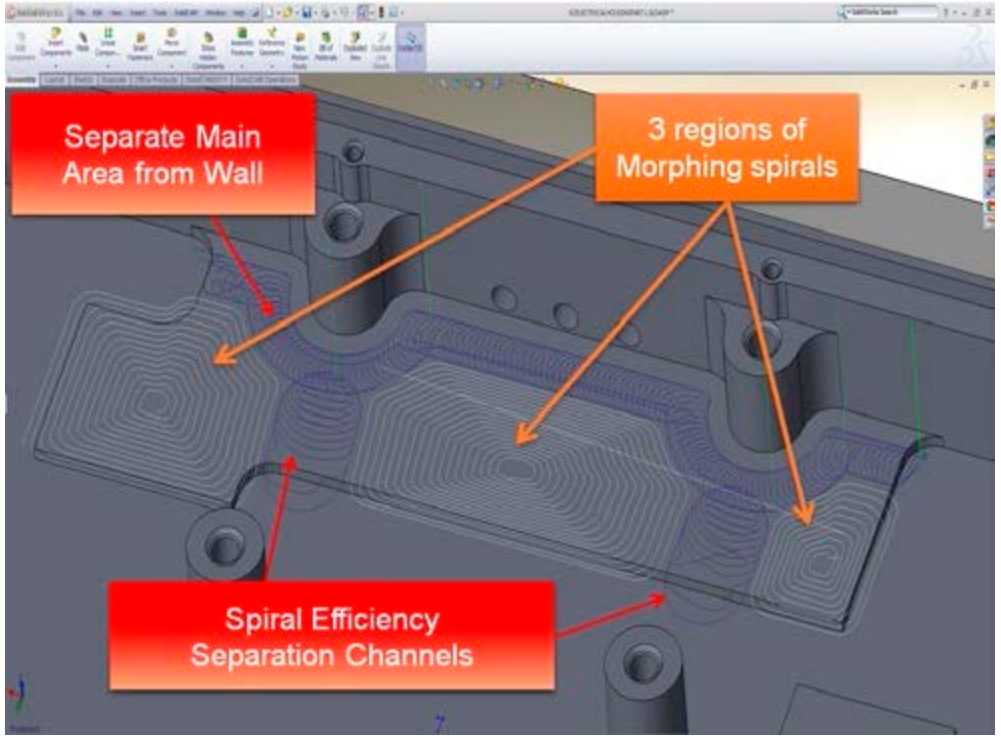

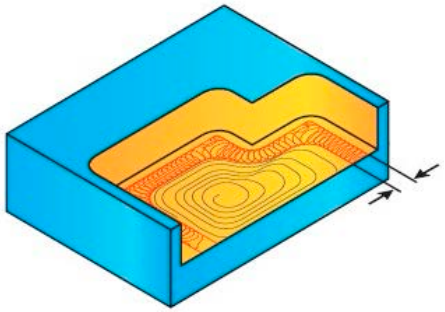

iMachining Channels – Separate Open Pocket into sub-areas

- **Channels are cut** using small **trochoidal-style tool paths** to produce **constant width slots**
- Channels are open at both ends, allowing the tool free passage.
- This **open pocket** has an aspect of 2:1. iMachining cuts **two separation channels** that divide the pocket into **three sub-areas** that can now be cleared with maximum possible MRR

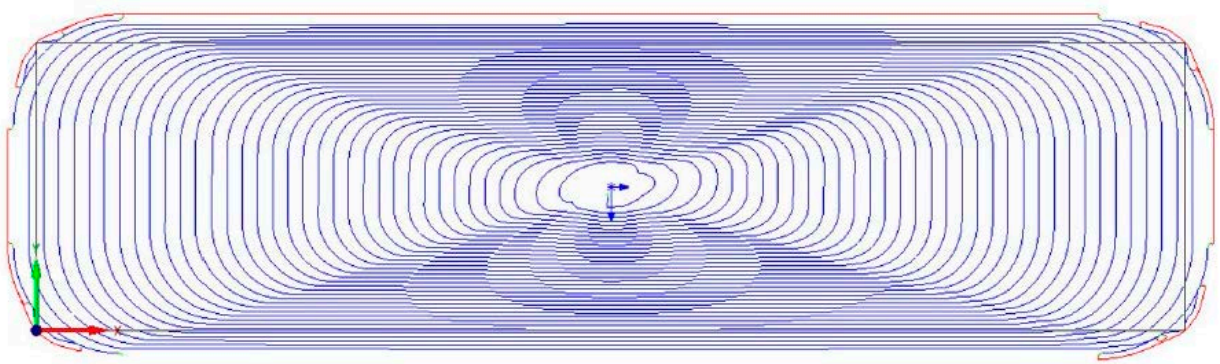

Figure 5A - Time 5:04 and tool wear at this extreme morphing is higher

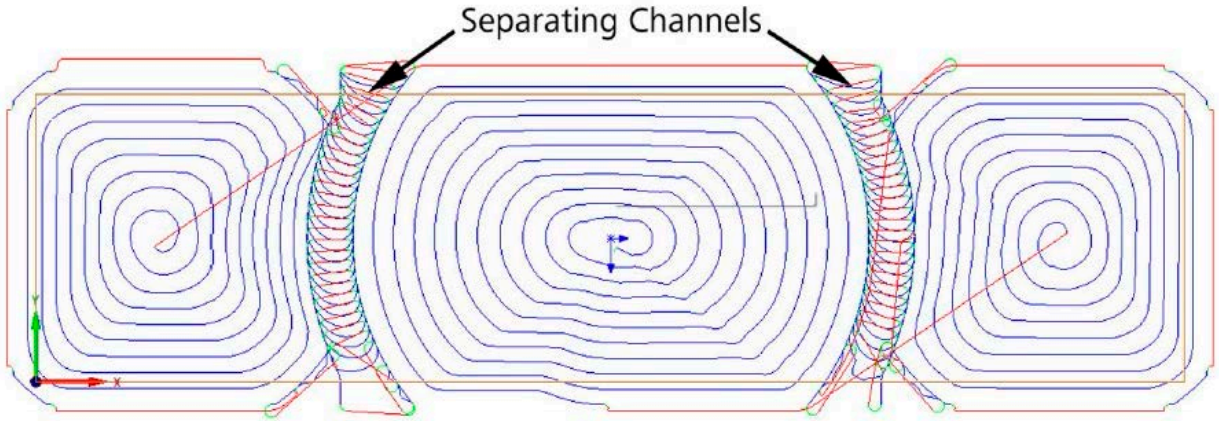

Figure 5B - Time 3:40 and tool wear is lower

iMachining Channels – Separate Semi-Open pocket from wall

- This **semi-open pocket** cannot be cleared with a spiral.
- iMachining calculates the time it would take to **separate the pocket area from the closed edge (wall) at the top**, using a separation channel, and the time it would take to **clear the separated area (the now open pocket) with a single spiral**.
- iMachining compares the sum of these times to the time it would take to clear the original pocket area using **trochoidal-style tool paths** - if the separation plus spiral is shorter than the trochoidal-style tool path, iMachining will separate as in Fig 6B.

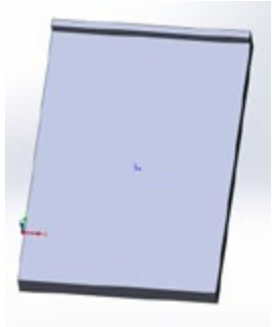

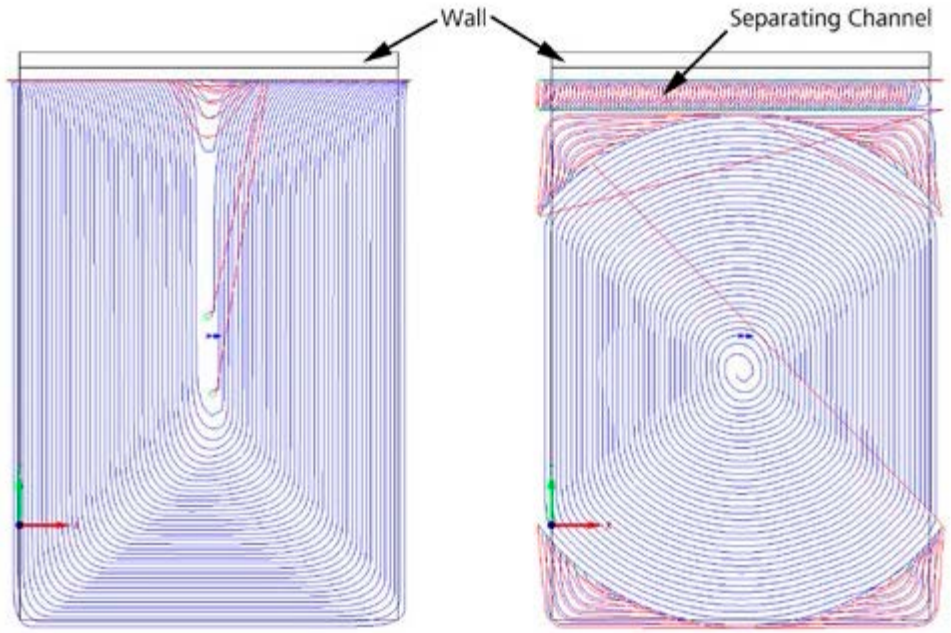

Figure 6A: Time 5:20
No separating channel - Semi open pocket completely cleared by Trochoidal Paths

Figure 6B: Time 4:32
After separating from wall it becomes an open area and is then mostly cleared by spiral paths

iMachining Moats

- **Moats** are a **special subset of channels and are cut around islands**, whenever a spiral or trochoidal-style tool path hits an island.

- This unique feature of iMachining makes it possible to **start a new morphing spiral, by allowing the tool free passage around the island,** separating it from the remaining areas that still need removal.

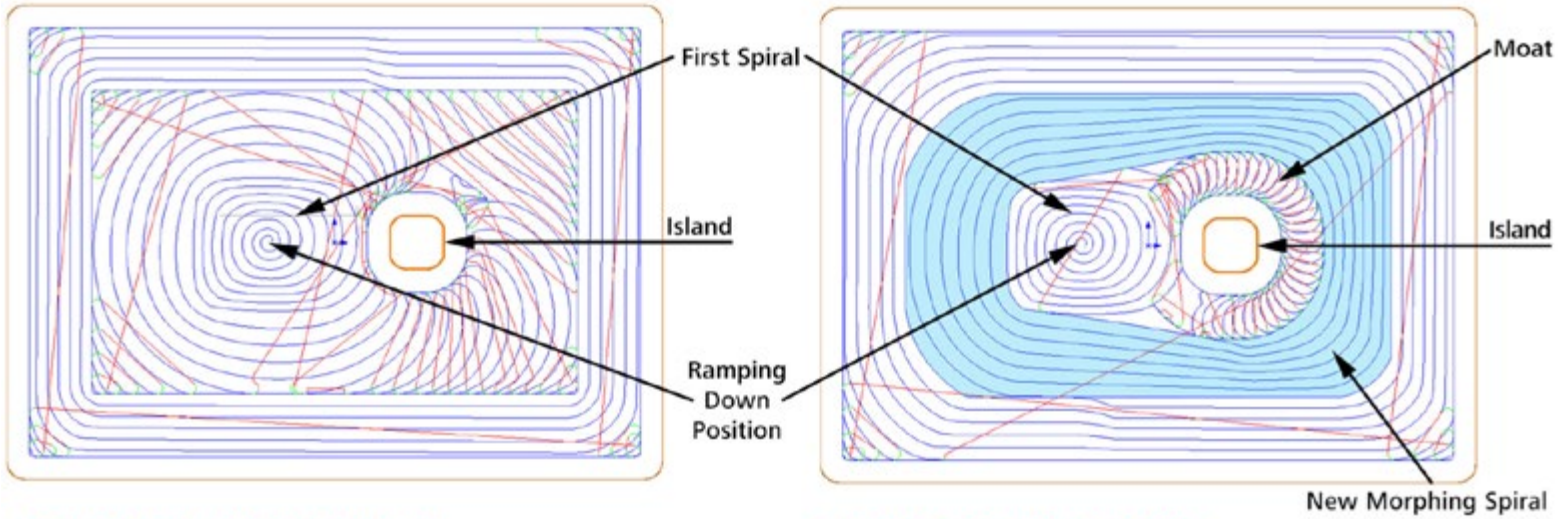

Figure 4A Time: 3:05 *(without Moat)*
The area around the first spiral and the island has to be cleared by trochoidal tool paths

Figure 4B Time: 2:52 *(with Moat)*
Cutting the moat enables iMachining to generate a new morphing spiral around the combined area of the first spiral and the island with the moat

iMachining toolpath

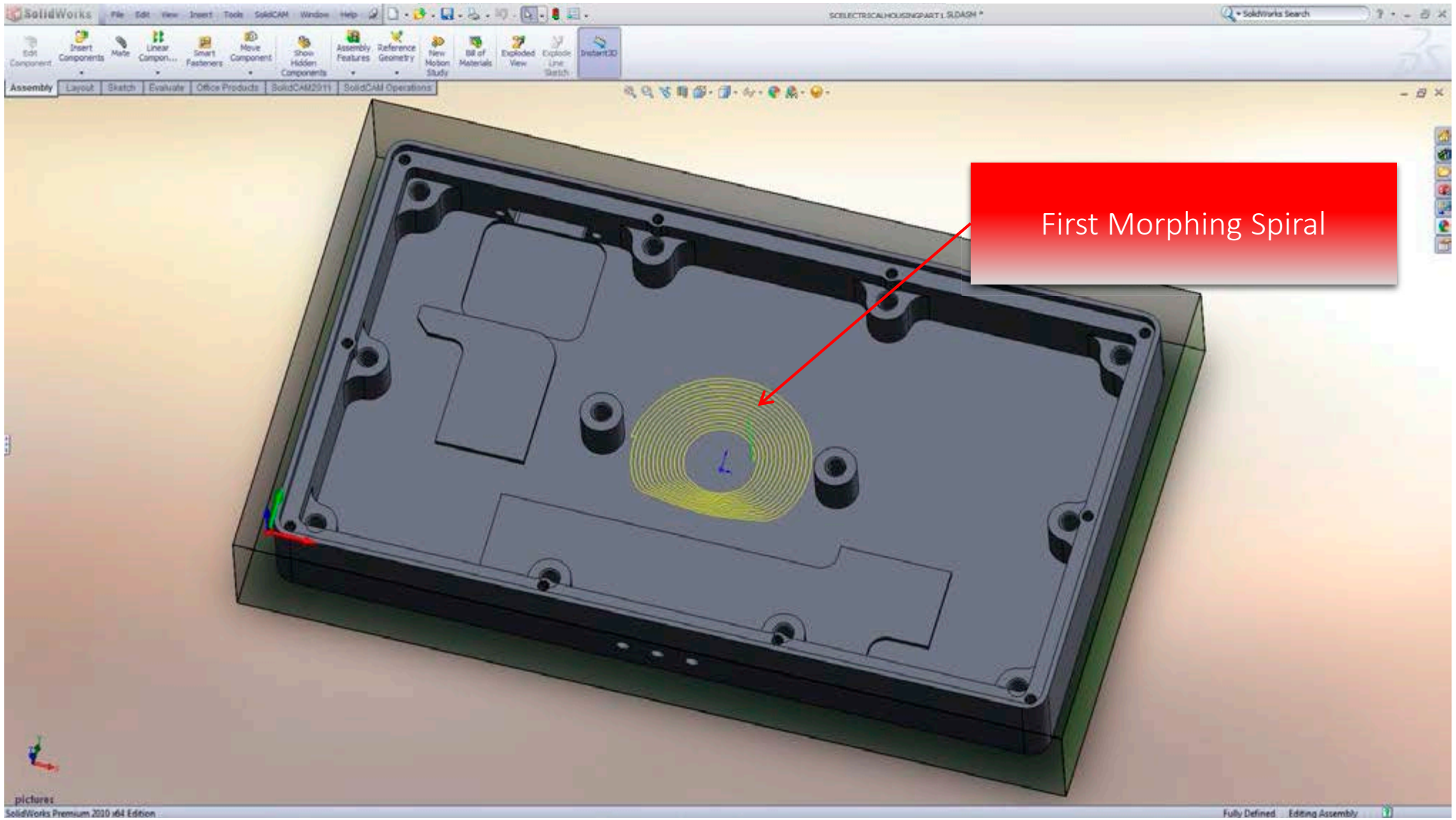

iMachining toolpath

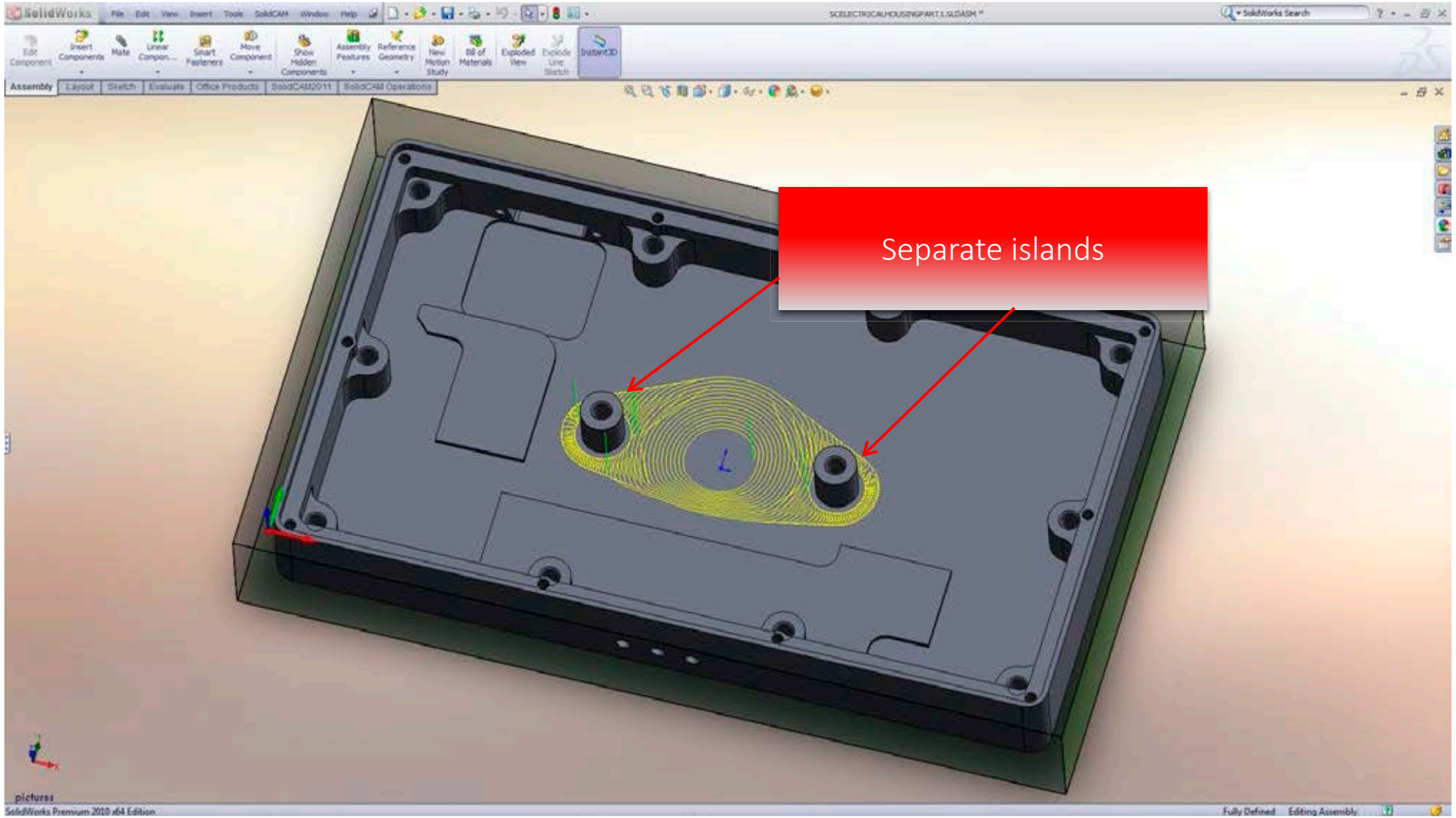

iMachining toolpath

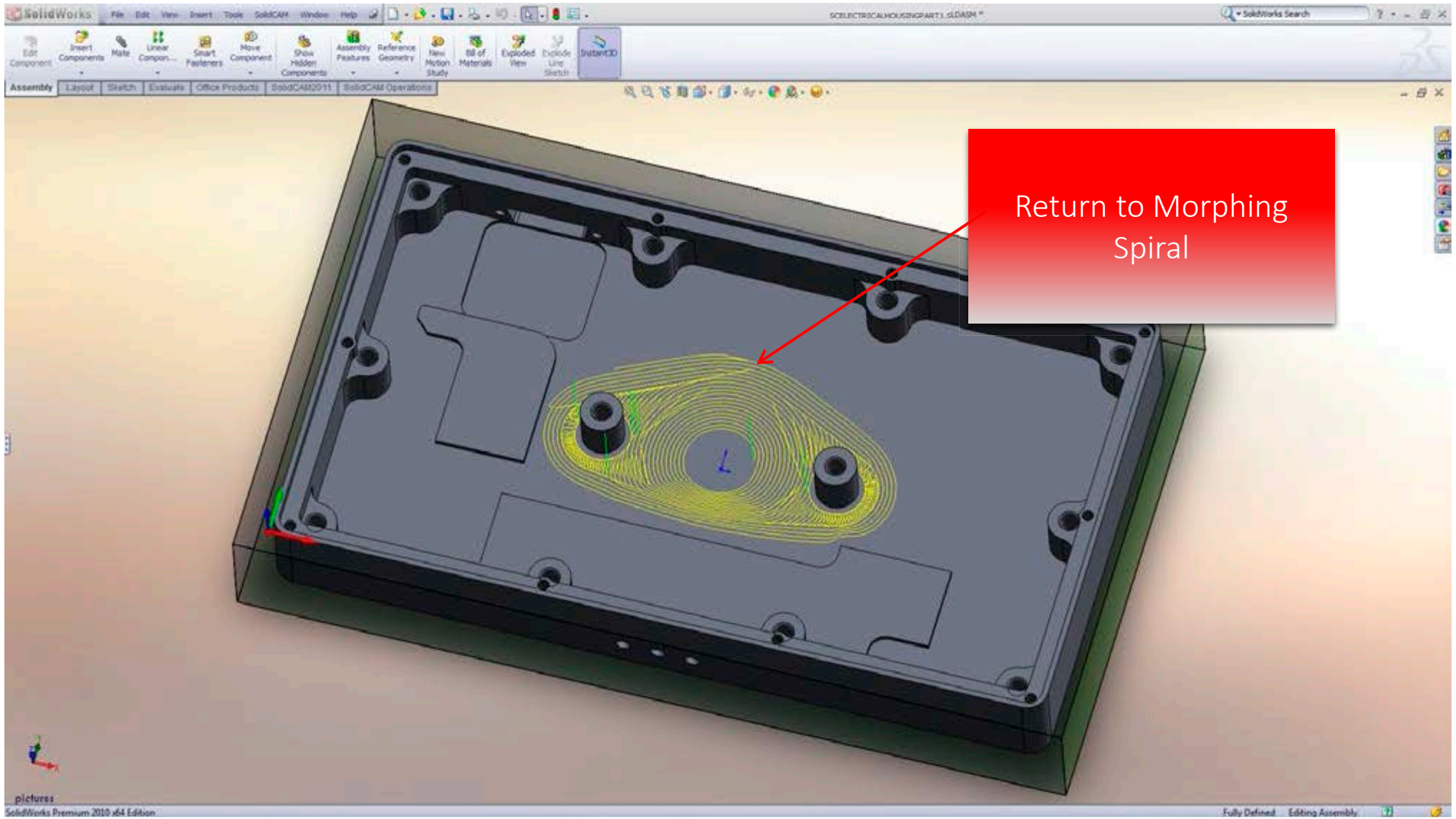

iMachining toolpath

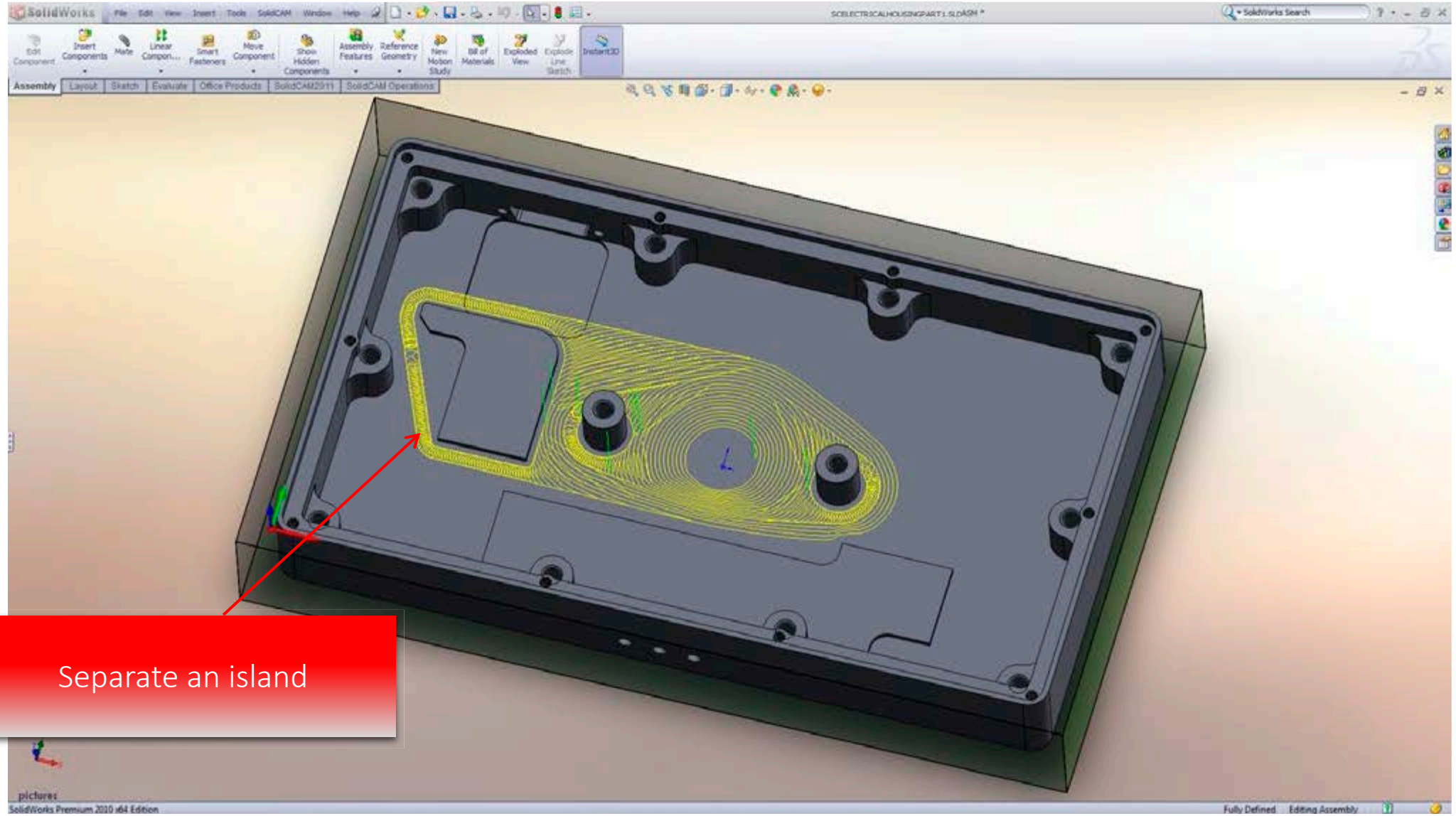

Separate an island

iMachining toolpath

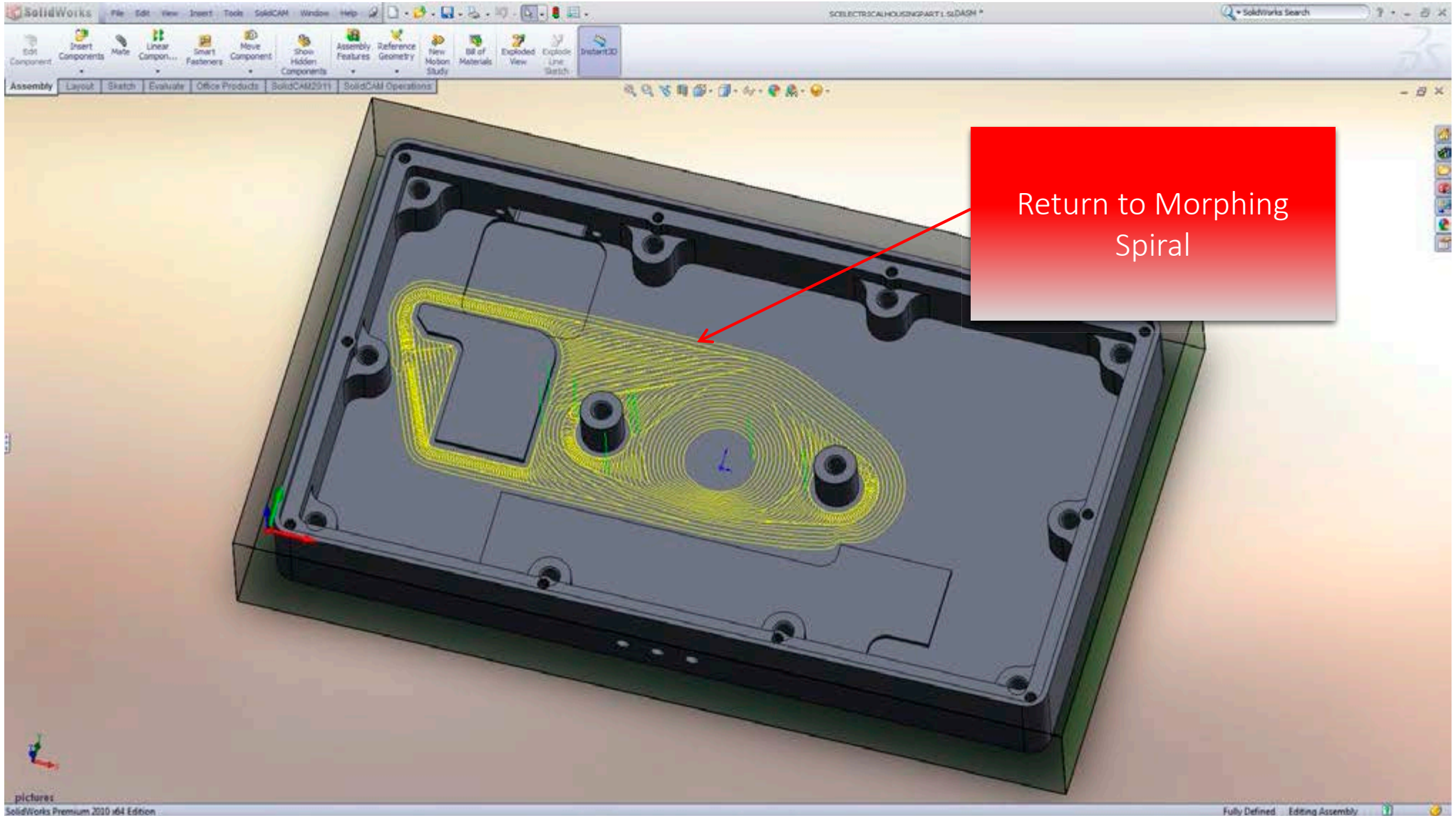

iMachining Rest material & Finish Cuts

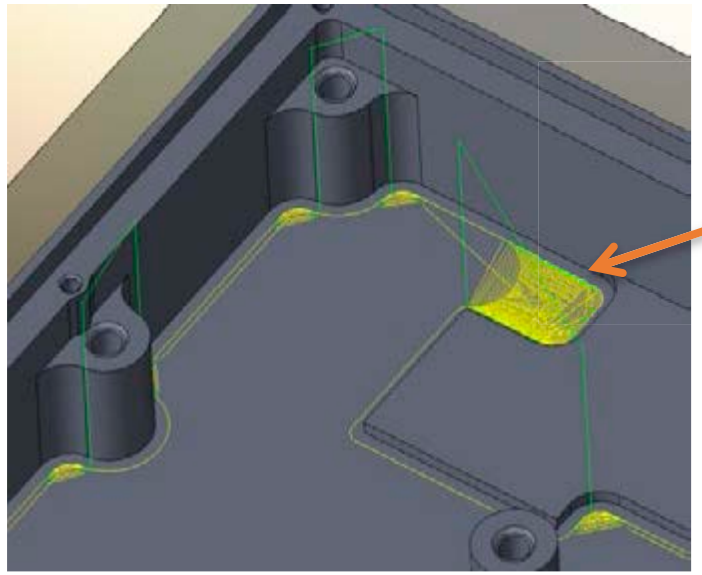

Rest material

Remove material from areas where larger tool could not fit.

Finish Cut

Clean corners then profile pass

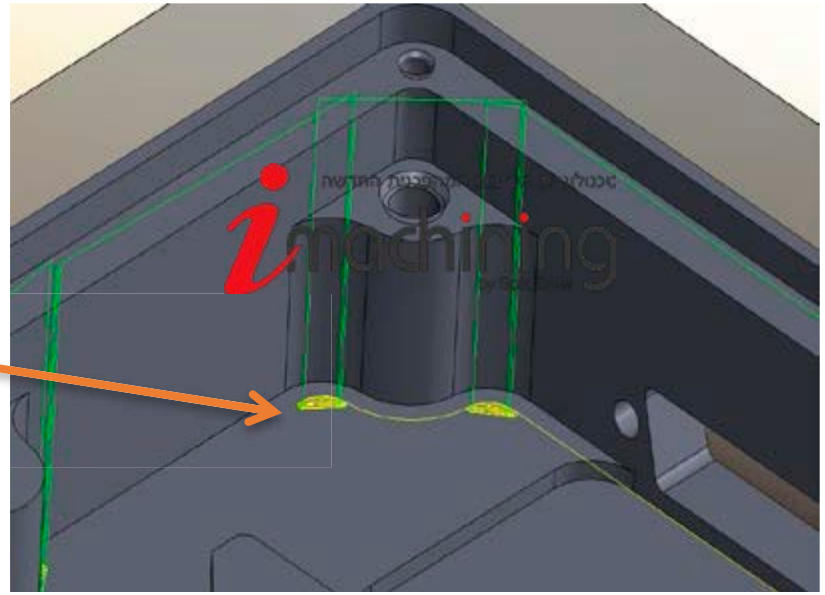

iMachining Toolpath

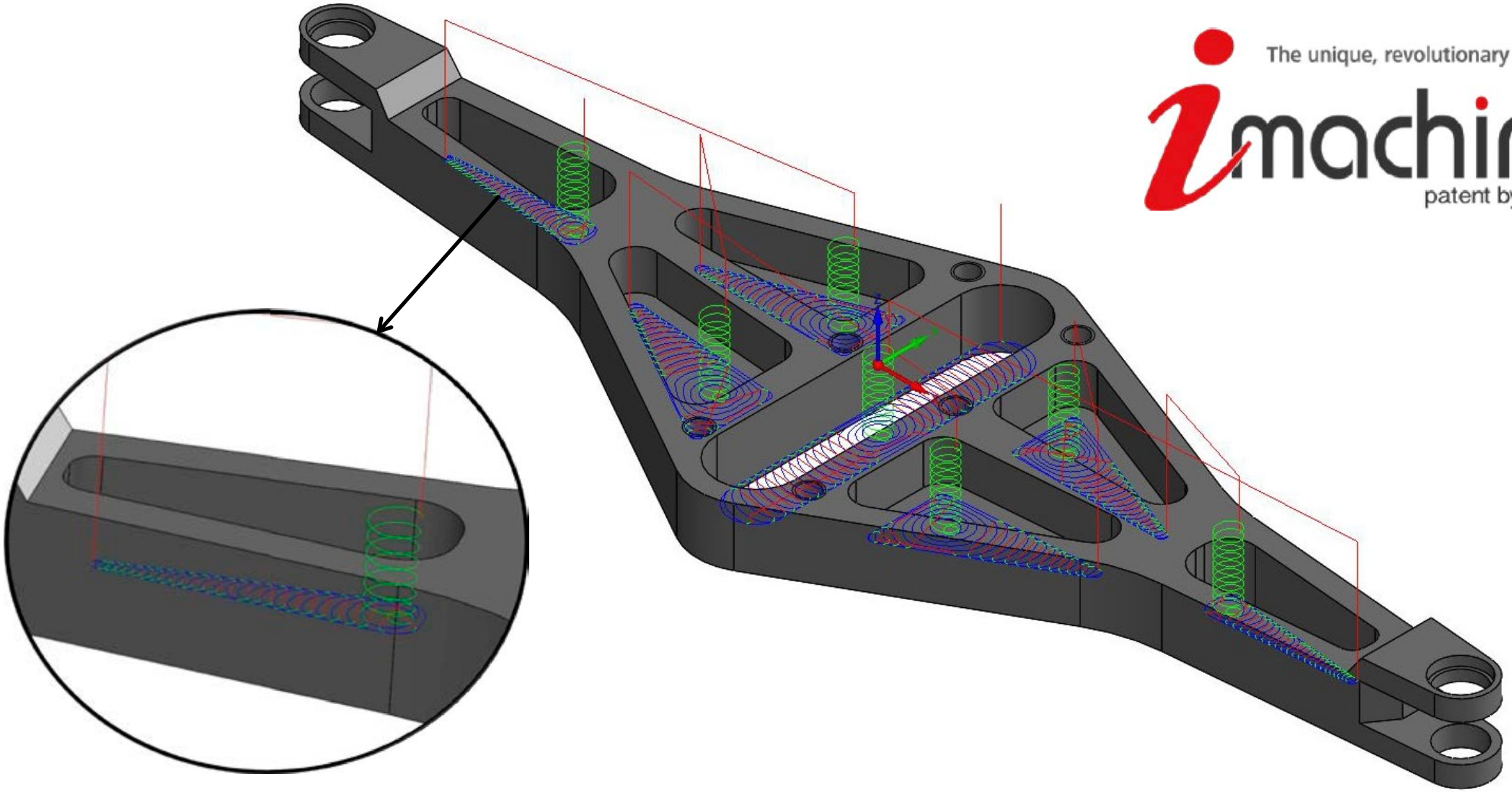

The unique, revolutionary Milling technology

iMachining®

patent by SolidCAM

2D iMachining cutting video

Typical Problem: Incomplete Input to Calculate Speeds & Feeds

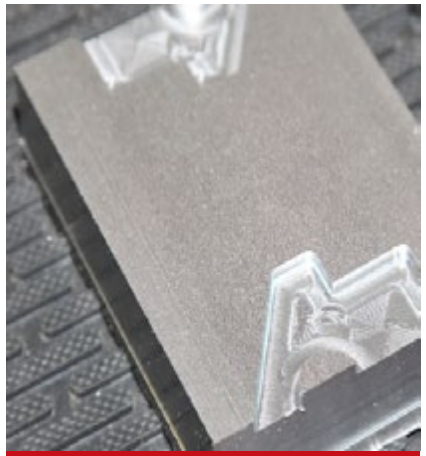

Material

- Cutting speed
- Hardness
- Max step
- Min step

Tool

- Length
- # Flutes
- Helix angle
- Chip thickness
- Hardness

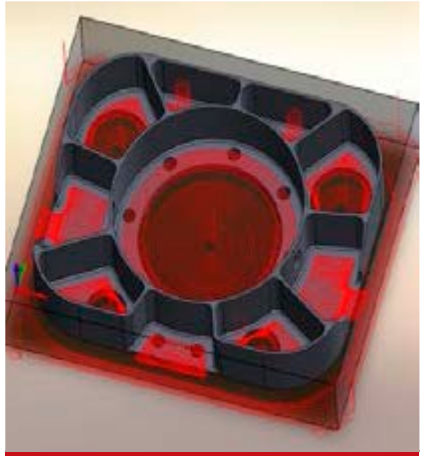

Geometry

- Depth

Machine

- Max spin
- Max feed
- Max power
- Memory size

Solution: Optimal Speeds & Feeds by the iMachining Technology Wizard

- **Technology Wizard** automatically ***takes the guess work out*** of setting how fast your CNC machine should **spin** and **feed** the Cutting tool**,** adjust the **step-overs** and **how deep to cut**.

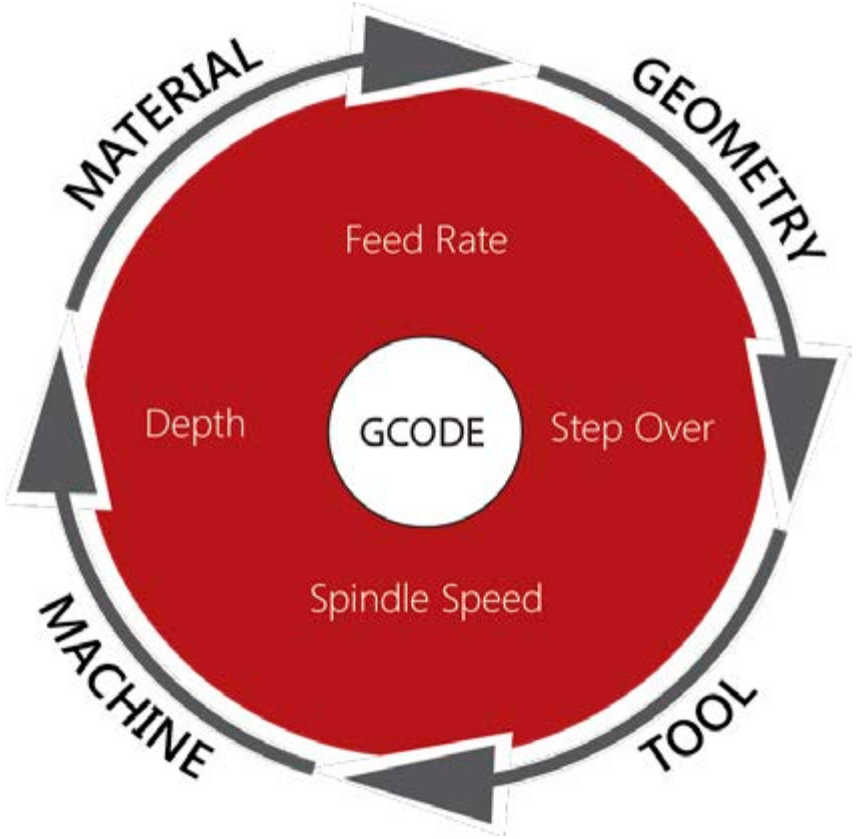

The unique, revolutionary Milling technology

iMachining®

patent by SolidCAM

1 Material & Machine Databases

2 Synchronize All Parameters

3 Seamless Integration

iMachining 2D/3D Patents

- iMachining 2D/3D patents

US Patent No. 8,489,224 B2 Computerized Tool Path Generation – July 16, 2013

US Patent No. 9,052,704 B2 Computerized Tool Path Generation – June 9, 2015

Computerized tool path generation

US 8489224 B2

Publication number	US8489224 B2
Publication type	Grant
Application number	US 13/036,726
Publication date	16 Jul 2013
Filing date	28 Feb 2011
Priority date	28 Feb 2011
Also published as	CA2828372A1, 5 More »
Inventors	Michael Berman, Doron Osovlanski, Christopher Calderone, Anthony Calderone
Original Assignee	Solidcam Ltd.
Export Citation	BiBTeX, EndNote, RefMan

Patent Citations (34), Non-Patent Citations (3), Classifications (12), Legal Events (1)

External Links: USPTO, USPTO Assignment, Espacenet

ABSTRACT

An automated computer-implemented method for generating commands for controlling a computer numerically controlled machine to fabricate an object from a workpiece, the method including the steps of selecting a maximum permitted engagement angle between a rotating cutting tool and the workpiece, selecting a minimum permitted engagement angle between the rotating cutting tool and the workpiece, and configuring a tool path for the tool relative to the workpiece in which the engagement angle gradually varies between the maximum permitted engagement angle and the minimum permitted engagement angle.

IMAGES (62)

DESCRIPTION

FIELD OF THE INVENTION

The present invention relates to systems and methodologies for automated tool path design and computer controlled machining and products produced thereby.

BACKGROUND OF THE INVENTION

The following publications are believed to represent the current state of the art and are hereby incorporated by reference:

U.S. Pat. Nos. 4,745,558; 4,907,164; 5,363,308; 6,363,298; 6,447,223; 6,591,158; 7,451,013; 7,577,490 and 7,831,332; and

US Published Patent Application No.: 2005/0256604.

CLAIMS (80)

The invention claimed is:

1. An automated computer-implemented method for generating commands for controlling a computer numerically controlled machine to fabricate an object from a workpiece, the method comprising the steps of:

selecting a maximum permitted engagement angle between a rotating cutting tool and said workpiece;

selecting a minimum permitted engagement angle between said rotating cutting tool and said workpiece; and

configuring a tool path for said tool relative to said workpiece in which said engagement angle gradually varies between said maximum permitted

The role of the iMachining level Slider

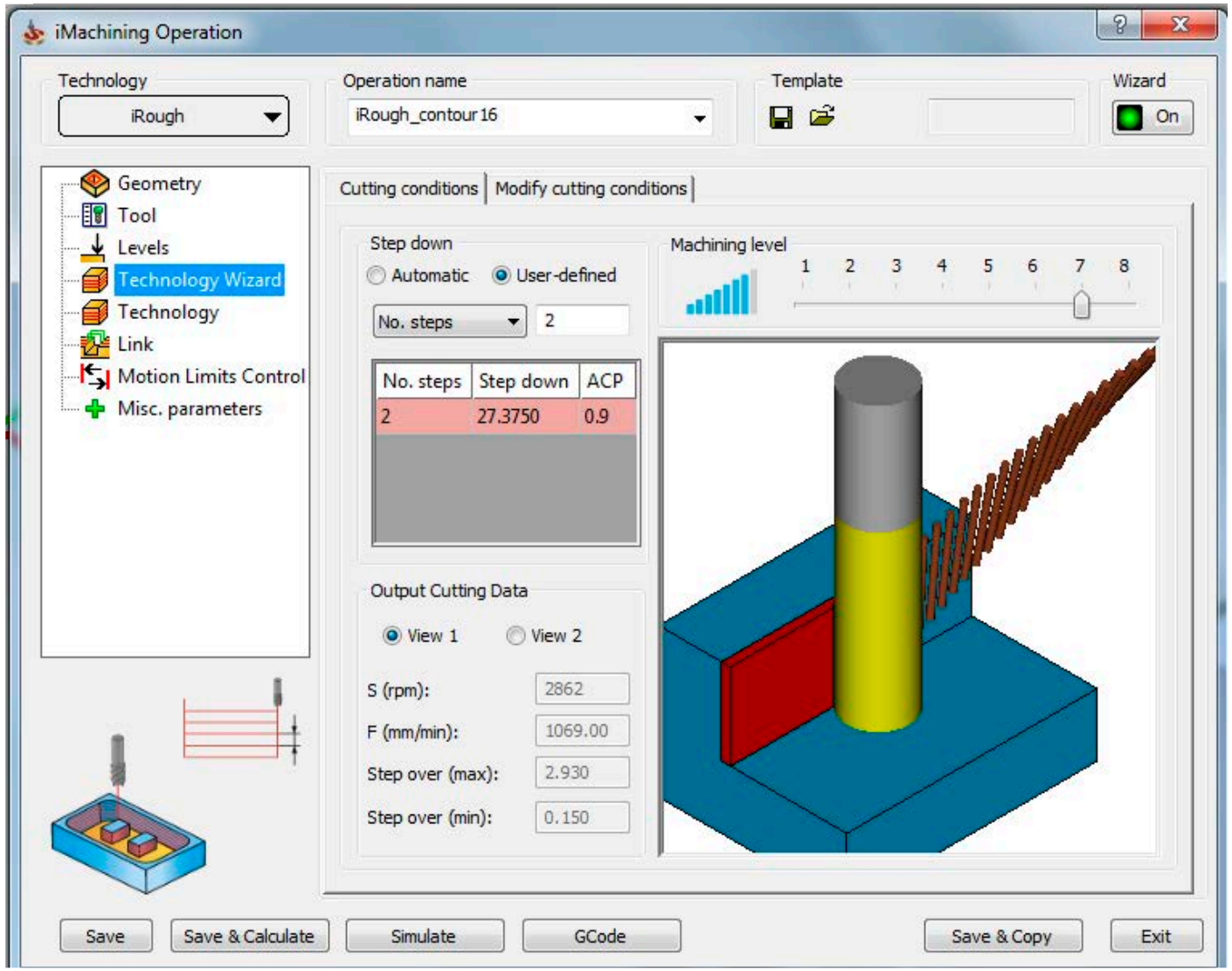

The role of the iMachining level Slider

- The Machining level slider provides the user the means to **conveniently and intuitively control the Material Removal Rate (MRR)** when machining their part.
- The Machining level selected by the user informs the Technology Wizard **how aggressively to machine the part**.
- The machining level slider has **8 selectable levels-** understanding its role is **crucial to the successful use of iMachining**

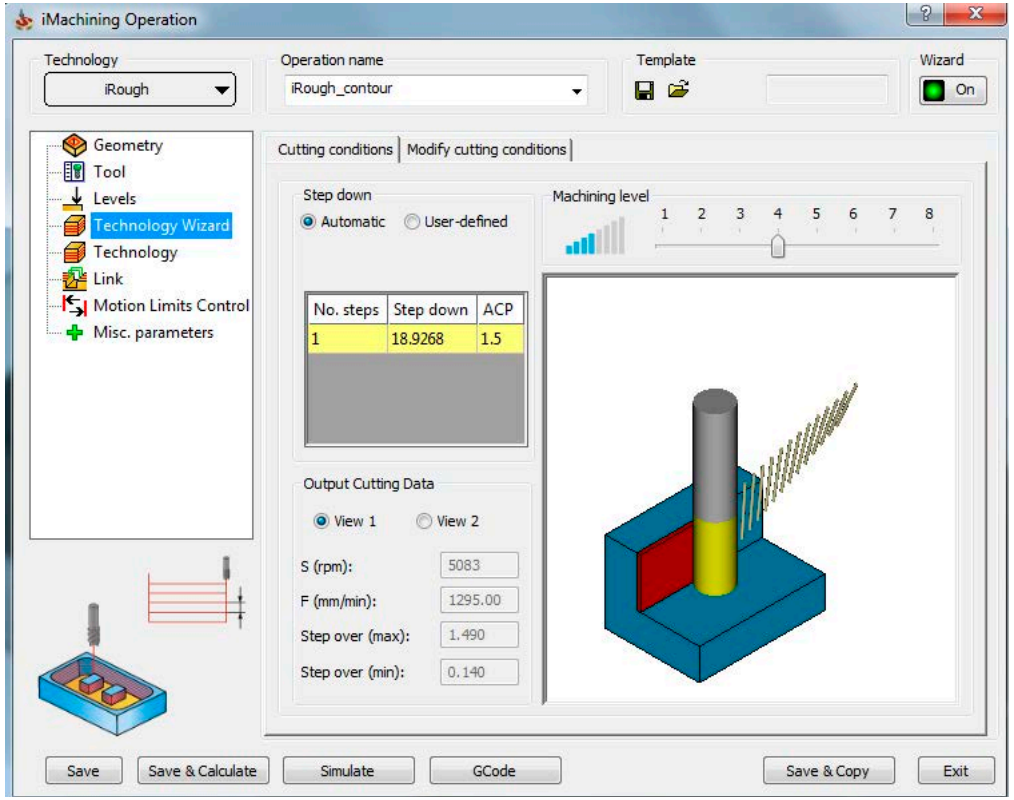

iMachining Cutting Conditions

- The Technology Wizard **makes its decisions,** knowing the **interdependence** of the properties and limitations which characterize the machining set up:
  - **Part geometry**
  - **Material properties**
  - **Tool properties**
  - **Machine limitations**

- The **Technology Wizard algorithms** work hand-in-hand with the iMachining High Speed **Tool Path Generator** to produce:
  - **Optimal** and **Fast Cutting conditions** (Spin (S), Feed (F), Max and Min Cutting (CA) or Max and Min Step Over)
  - **Safe CNC program** that guarantees **First Part Success**

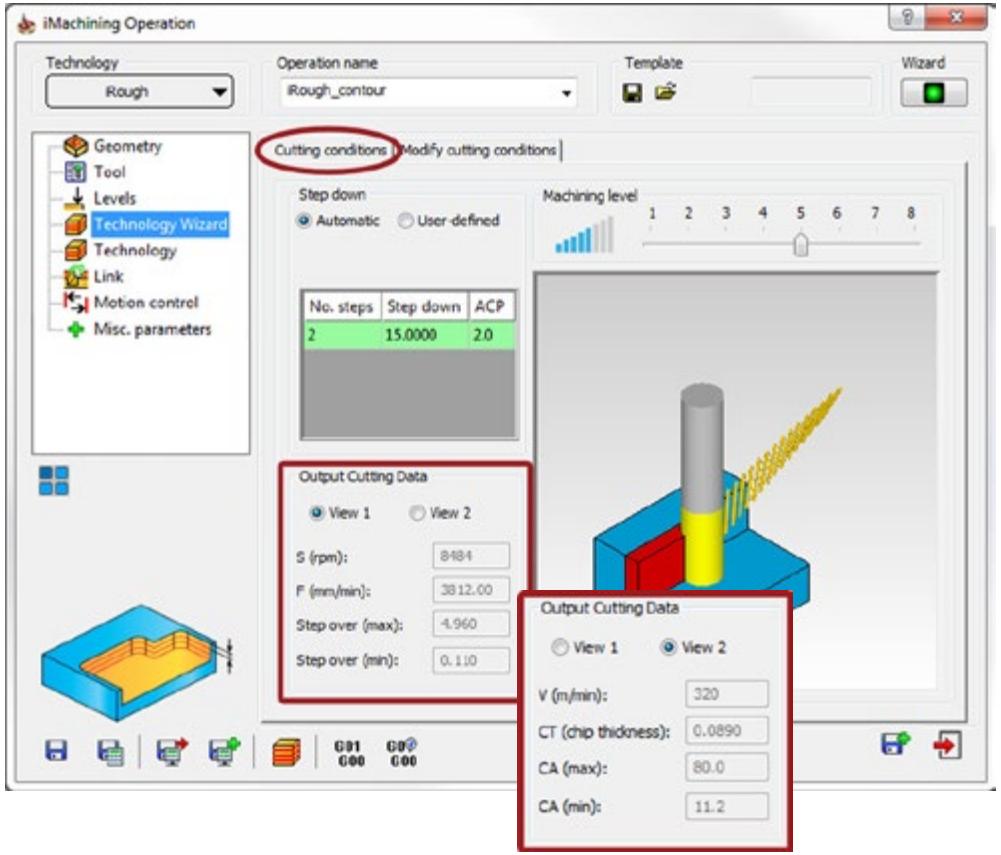

Which iMachining Level to use?

Who needs the iMachining Level Slider? Why not **always work with Level 8**?

➢ The answer is **potential vibrations**.

The **Technology Wizard** has no knowledge of:

- The **rigidity and state of the machine - the backlash, the level of wear in the spindle bearings**, machine's **level of maintenance**...
- The **rigidity of the clamping** of the **workpiece** or of **the tool holding.**

For these reasons the **iMachining Level Slider** was created..

iMachining Slider Level 1 to Level 8

- The **Minimum MRR** (Metal Removal rate) is associated with **Level 1** of the iMachining Level Slider
- The **Maximum MRR** (Metal Removal rate) is associated with **Level 8** of the iMachining Level Slider.
- **Levels 2-7** are associated with combinations of **intermediate (interpolated) levels of MRR**.

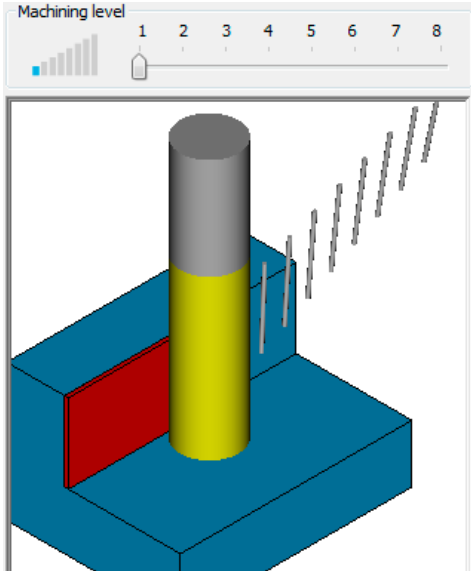

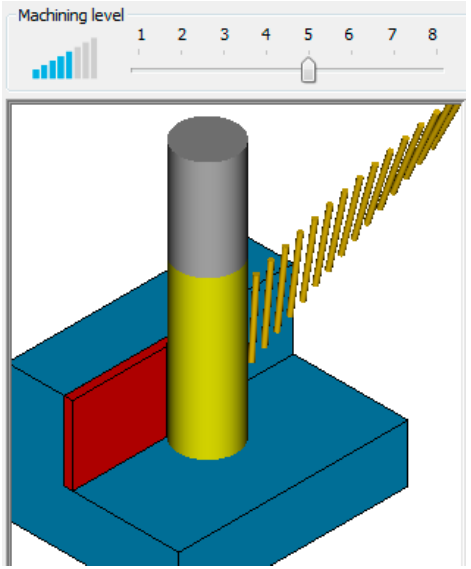

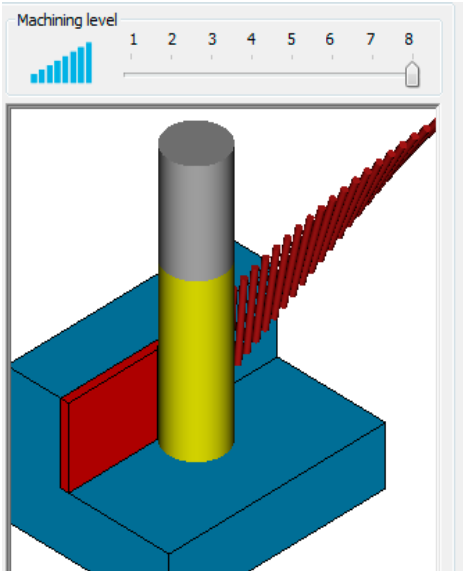

Turbo Mode

- The **Turbo Mode** option is available for selection under the Modify cutting conditions tab on the Technology Wizard page.
- If you select this option, all the levels of the Machining level slider become **more aggressive to the extent that the MRR of each level is about 25% higher than before**.
- This option was added for customers who need a higher MRR than the MRR of level 8.

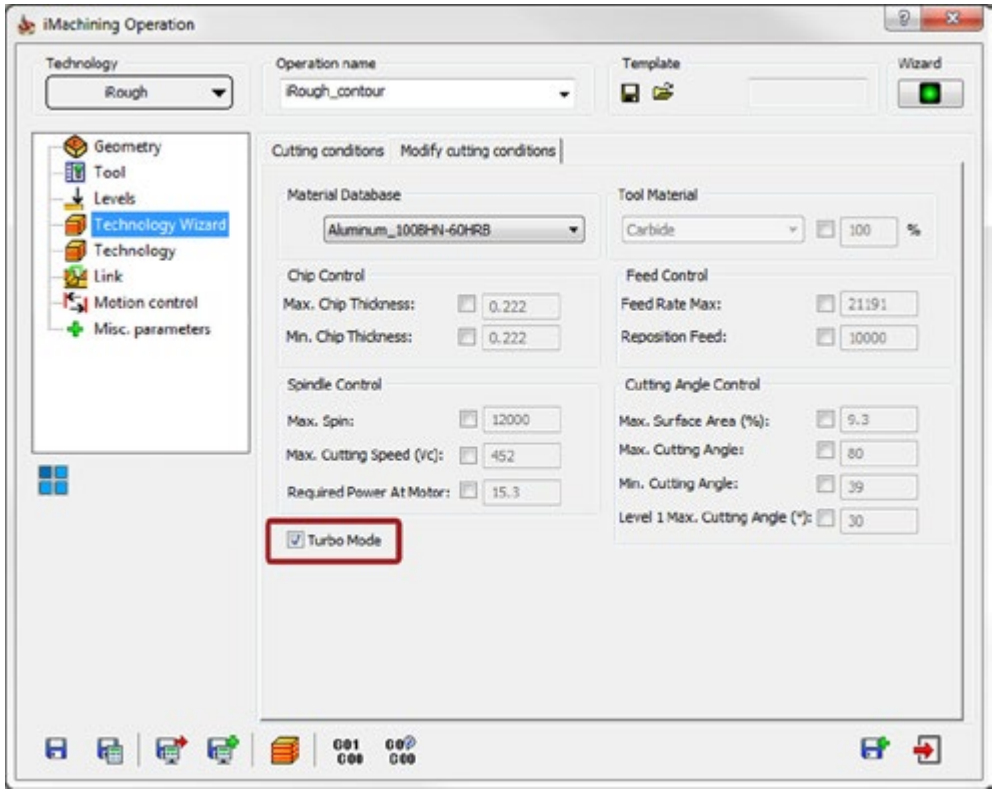

Machine’s default Machining Level

- **Assign each machine in the workshop** with a **Machine Default Level**, which reflects the **basic machine rigidity and its state of maintenance.**

- The **assigned Machine Default Level** should **not** be influenced by **inherent capabilities of the machine** (**Spindle speed max, Feed rate max..)** - these parameters are known to the Wizard from the Machine Database.

- The Machine Default Level should only **reflect the machine's tendency to develop vibrations**:
  - An **older, ill-maintained, non-rigid machine** should be assigned a very **low default level**: between 2 and 4.
  - A **brand-new, rigidly constructed machine** should be assigned a **high default level**: level 6 Turbo – can be pushed later to level 7 or 8 Turbo, after listening to the first cut, providing everything sounds and looks perfect).

- The Machine Default Level is **defined only once** and is stored in the **Machine Database**

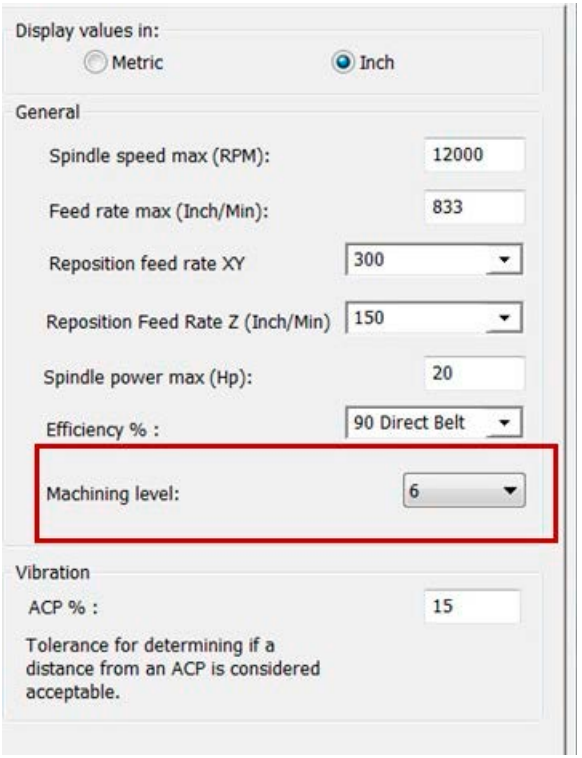

Axial Contact Point (ACP) parameter

ACP = Depth / Fine Pitch

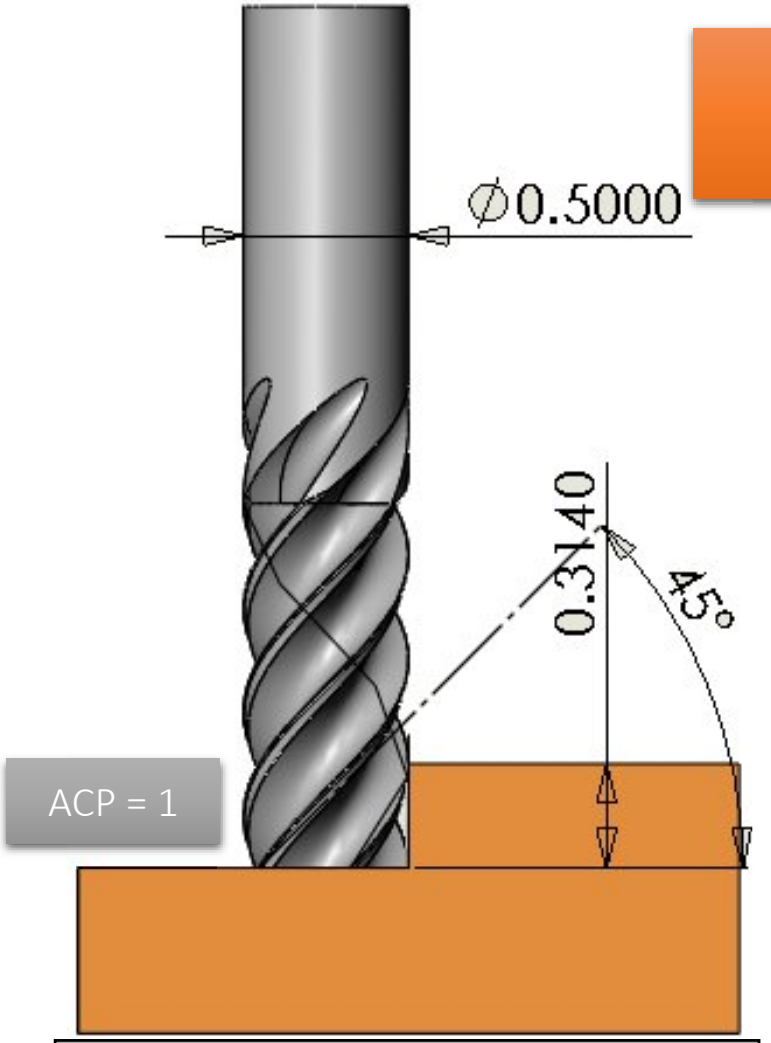

Few contact points

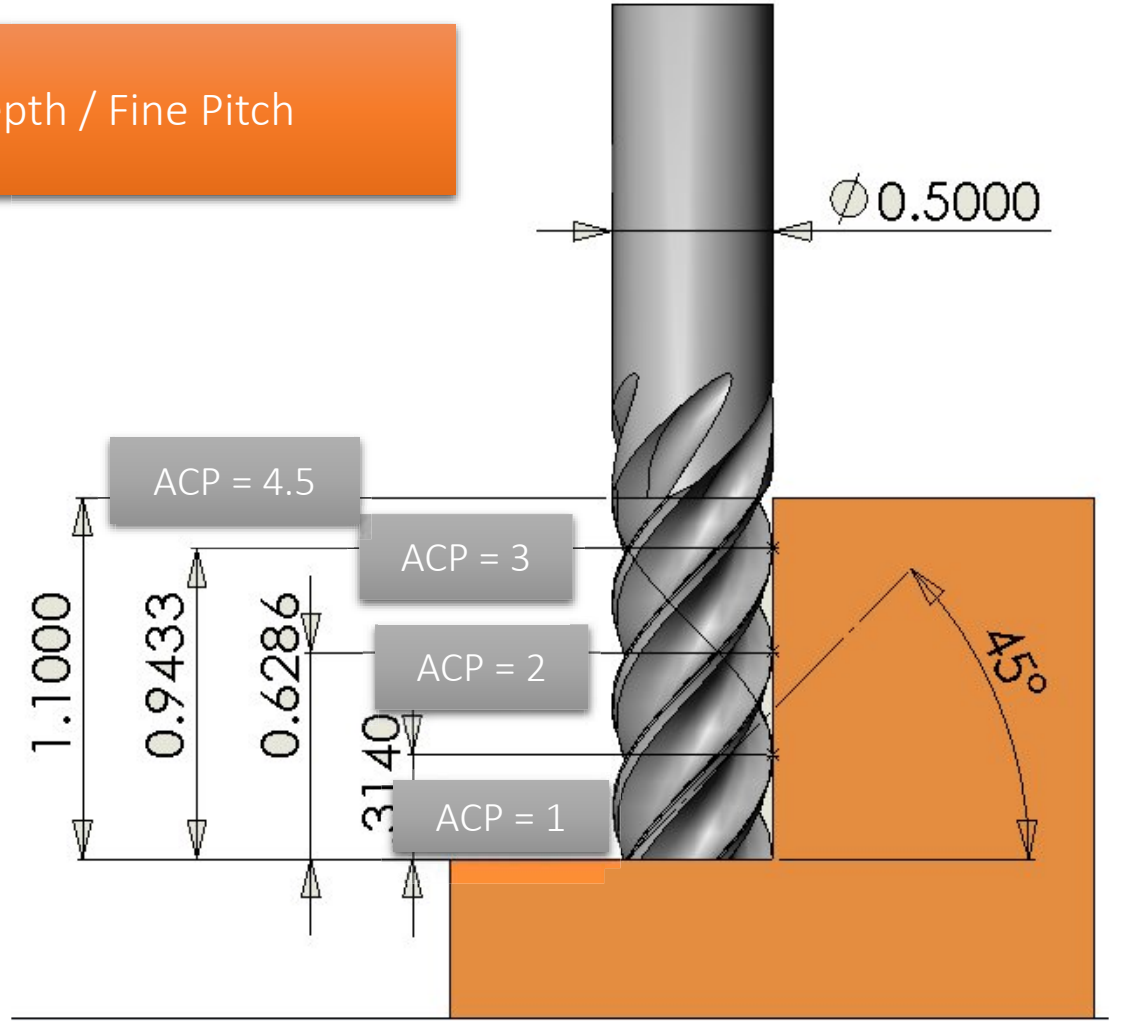

Many contact points

Axial Contact Point (ACP) paremeter

- The **ACP value is calculated by the Wizard**, reflecting the **number of contact points** the tool has with the vertical wall it is cutting, along a vertical line.
- According to iMachining theory, **the closer the ACP is to a whole number, the less likely it is that vibrations will develop**.
- An **ACP** of **1.0, 1.1, 1.2** or **1.8, 1.9**, is safe - having **vibrations is less likely**.
- An **ACP** of **1.4, 1.5, 1.6** or **2.4, 2.5, 2.6**.., must be changed: either **change the number of down steps** or **change the tool**, or **reduce the Machining level**.

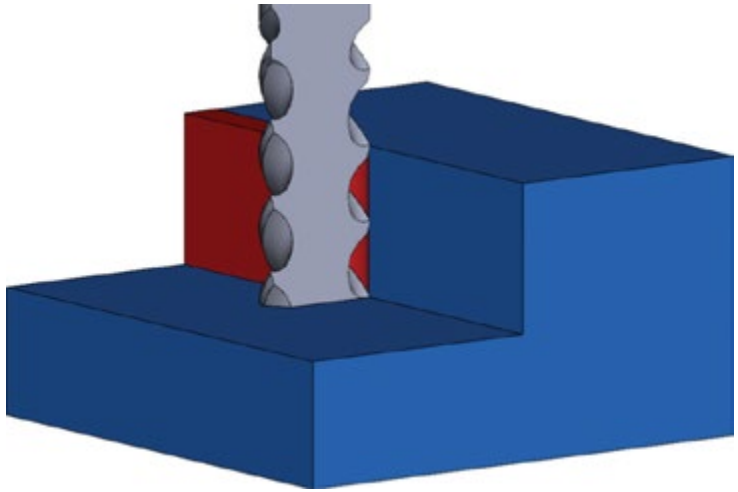

Axial Contact Point (ACP) parameter

- The **Technology Wizard will alert the user** whether or not the **situation for stability is good, based on ACP parameter.**

- The **output grid changes color** to show the current situation:

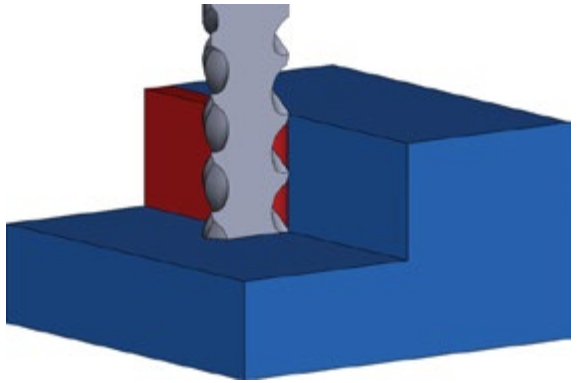

- **Red** = Bad - High likelihood of vibrations
- **Yellow** = Not so good - Medium likelihood of vibrations
- **Green** = Good

No. ste...	Step do...	ACP
5	15.9000	0.8

No. ste...	Step do...	ACP
3	26.5000	1.3

No. ste...	Step do...	ACP
2	39.7500	1.9

Vibration prevention

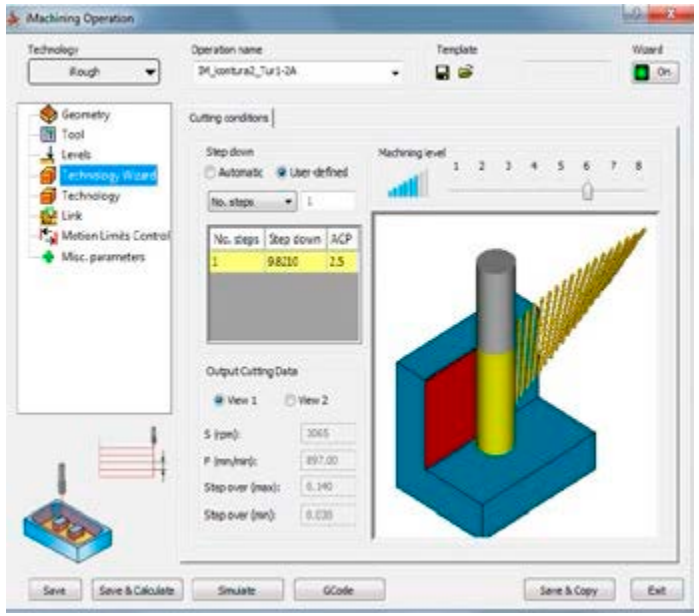

- **Vibration** is a main disruptive element that breaks the delicate balance of smooth high speed cutting
- **To prevent vibration**, strict attention must be paid to: **Stability & Rigidity of Workpiece holding**, **Tool Holding**, **Tool TIR**, Maintenance state of CNC machine, Wear in Spindle bearings, Depth, Speeds & feeds..
- iMachining with its **Machining Level Slider** of the Wizard enables compensating for less than optimal conditions and **avoids vibrations by selecting a suitable machining level**

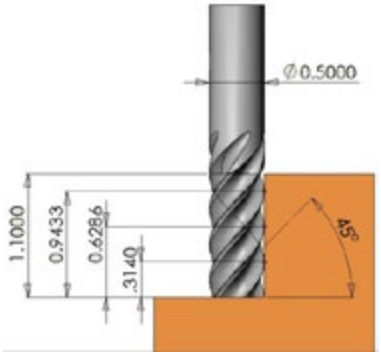

Cut the First Part...

- We must assess the **Rigidity of the work clamping**, and that of the **Tool holding** and its **Balance and eccentricity** - any one of those may require lowering the machining level another notch.

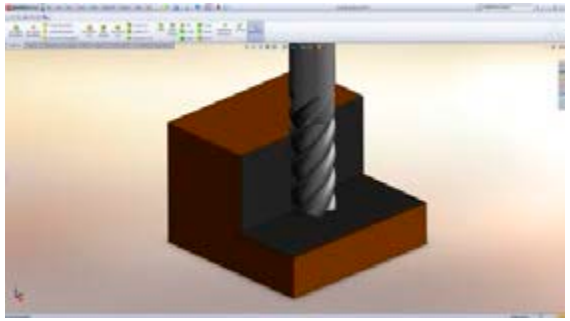

Now we are ready to cut

- Cut **the first part - listen to the sound of the cutting**, and assess the resultant **surface quality of the part** and the **tool wear**.

Cutting more parts…

- If there are more parts to cut, and the previous cut was good, you may want to **increase the MRR by moving the level slider up** a notch or two and try again.

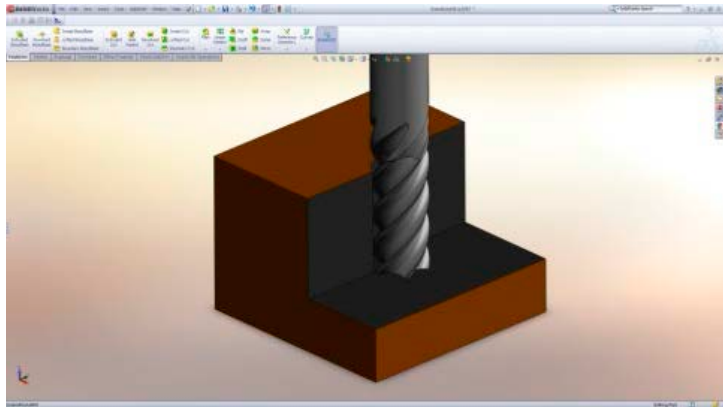

- The reason why it is possible to **increase the level** is because the Wizard **always uses Cutting conditions values that are below the safe maximum by a reasonable margin**, leaving enough room for taking a **more risky cut.**

.

Clamping Situation 1

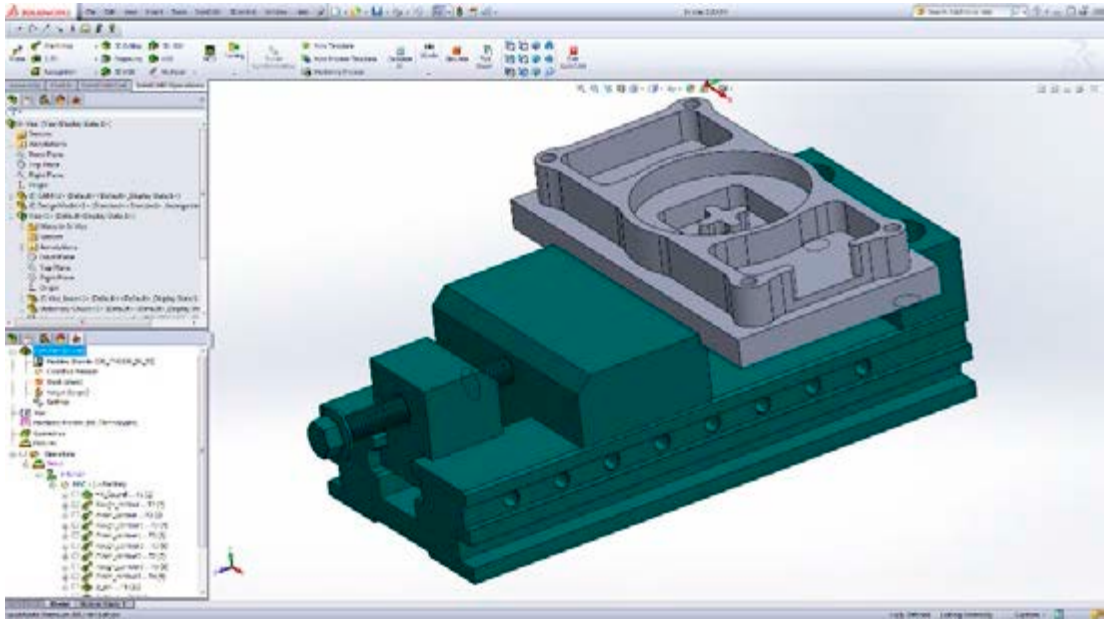

Part clamped in a machining vice

=

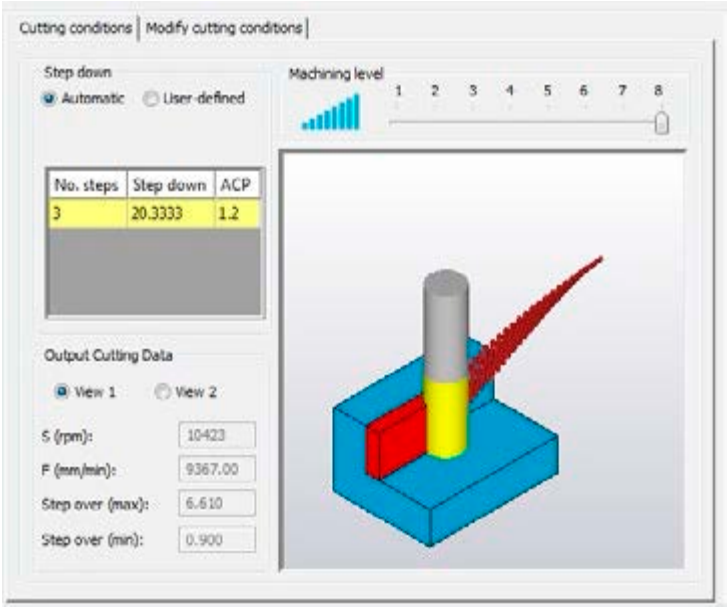

High machining level

- Securely clamped by vice
- Part sides pre-machined parallel
- Use High Machining Level (e.g. 8)

Clamping Situation 2

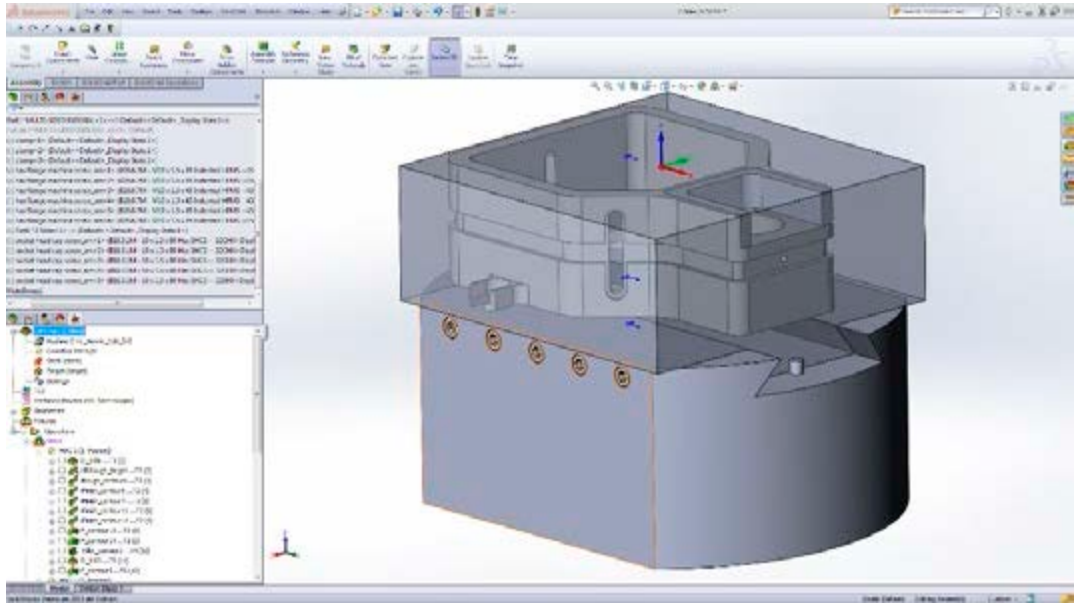

Part clamped in a 5 Axis fixture

=

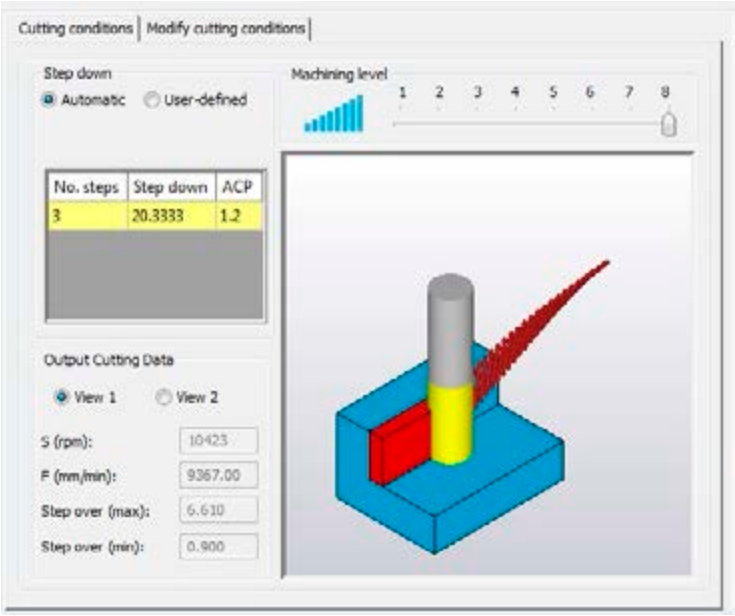

High machining level

- Securely clamped by fixture
- Part stock pre-machined for fixture
- Use High Machining Level (e.g. 8)

Clamping Situation 3

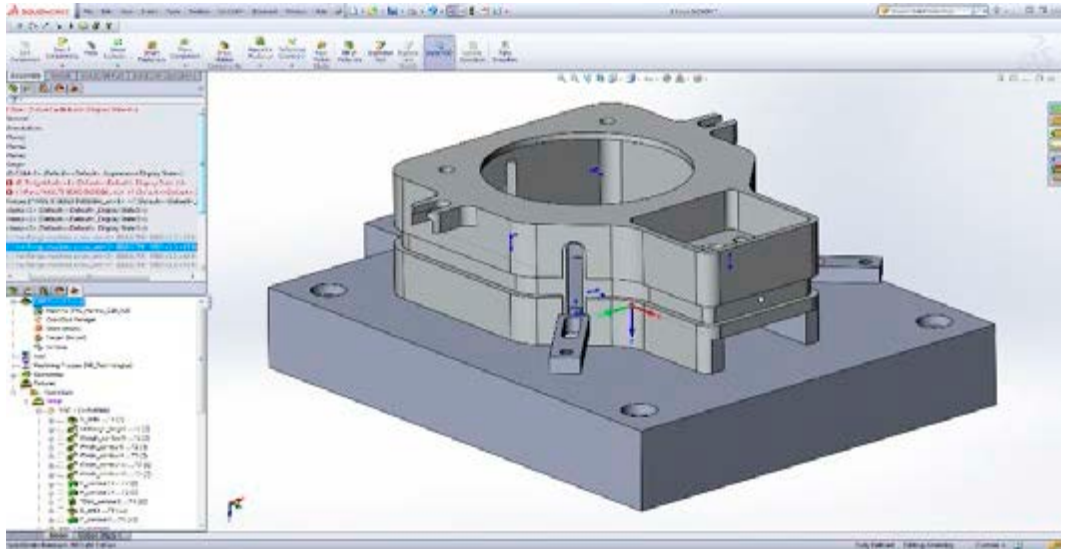

Part clamped in a plate fixture

=

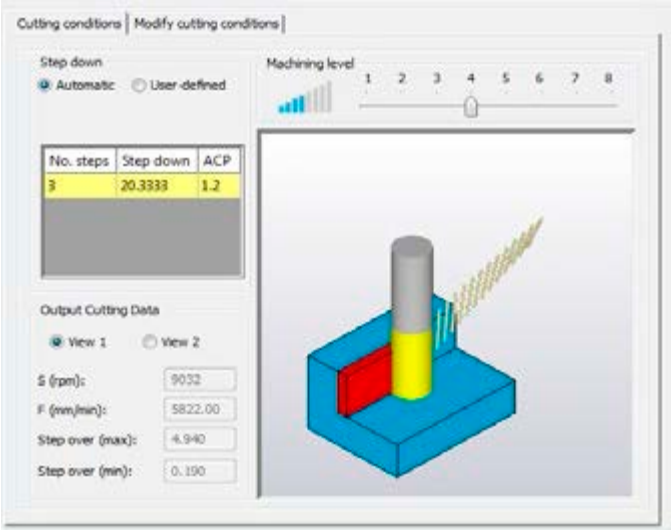

Mid-range machining level

- Securely clamped
- Part sitting on thin walls
- Thin walls above clamping tend to vibrate
- Use Mid-range machining level (e.g. 4)

Clamping Situation 4

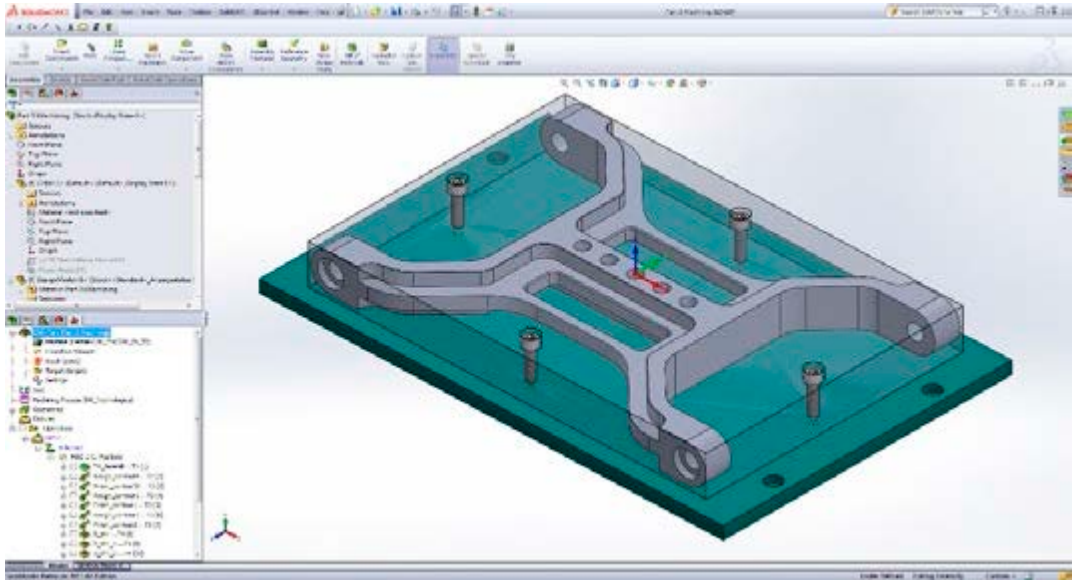

Part clamped on a thin plate

=

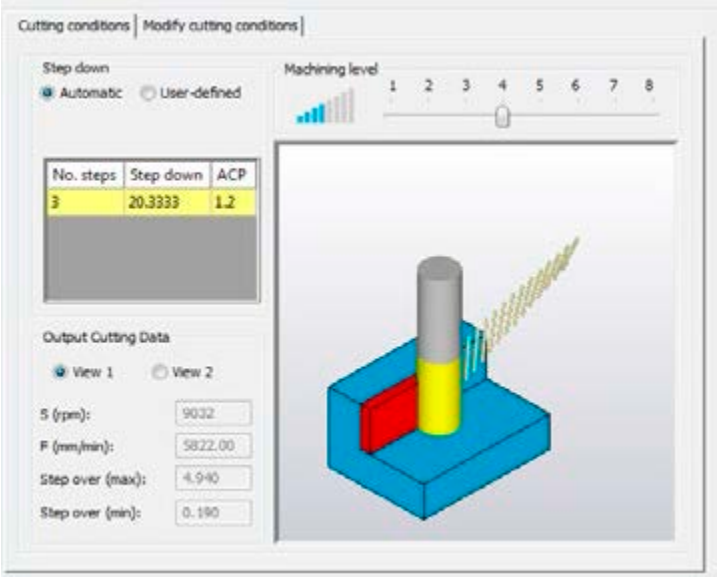

Mid-range machining level

- Securely clamped on thin plate
- Thin plate tends to vibrate in the middle area
- Use Mid-range machining level (e.g. 4)

Clamping Situation 5

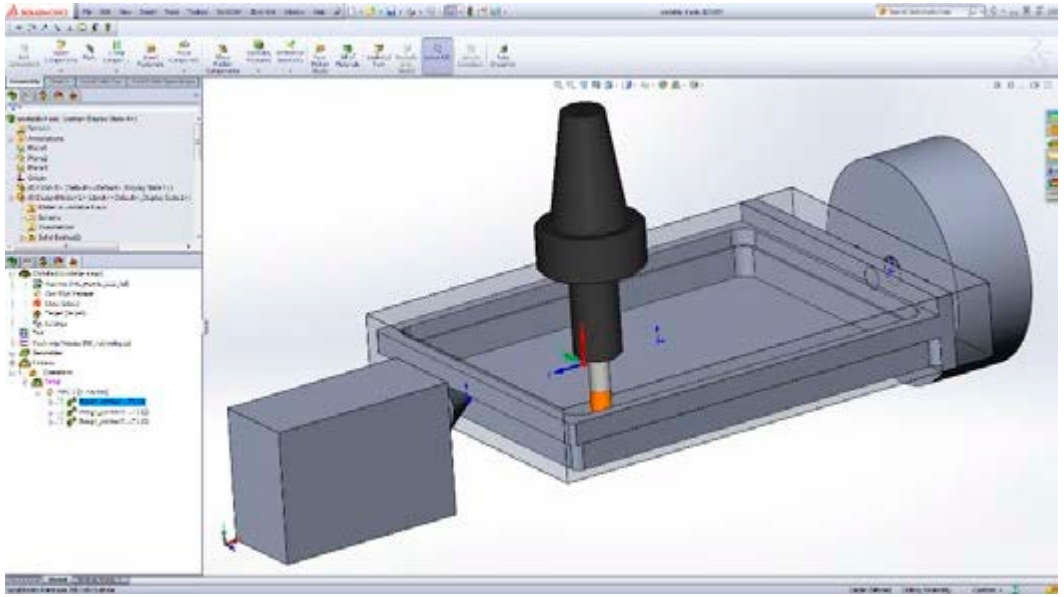

Part clamped in a 4th Axis indexial head

=

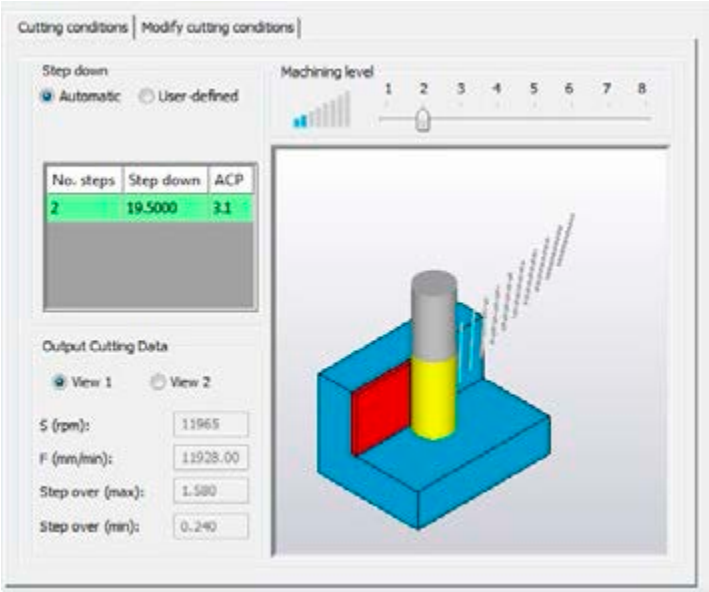

Low-range machining level

- Clamping not secure
- Part vibrates when machined laterally away from center rotation axis
- Use Low-range machining level (e.g. 2)

Machinability factor of a material

- After machining, you may discover that **you can cut your material faster than the Machining level slider** or **Turbo Mode permits**.
- This means that the **material is less hard than specified by the property data resource (www.matweb.com)** - same materials are made by different manufacturers and **tolerances can exist between your material and its given UTS value**, making it more or less machinable.
- The **Machinability factor** enables you to **alter the hardness of a material without changing its given UTS value**.
- **Moving the slider in positive direction** informs iMachining that **your material is less hard than indicated by its UTS** value.

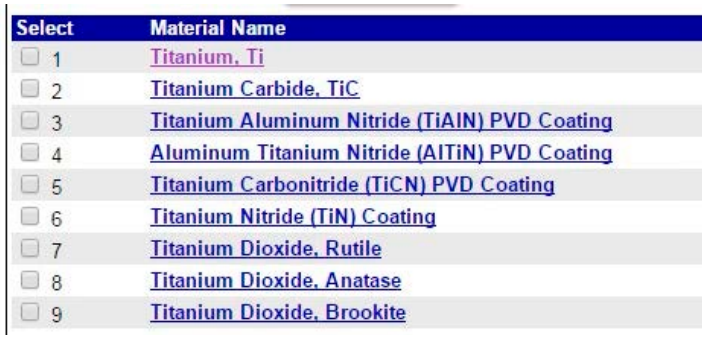

Select	Material Name
1	Titanium, Ti
2	Titanium Carbide, TiC
3	Titanium Aluminum Nitride (TiAlN) PVD Coating
4	Aluminum Titanium Nitride (AlTiN) PVD Coating
5	Titanium Carbonitride (TiCN) PVD Coating
6	Titanium Nitride (TiN) Coating
7	Titanium Dioxide, Rutile
8	Titanium Dioxide, Anatase
9	Titanium Dioxide, Brookite

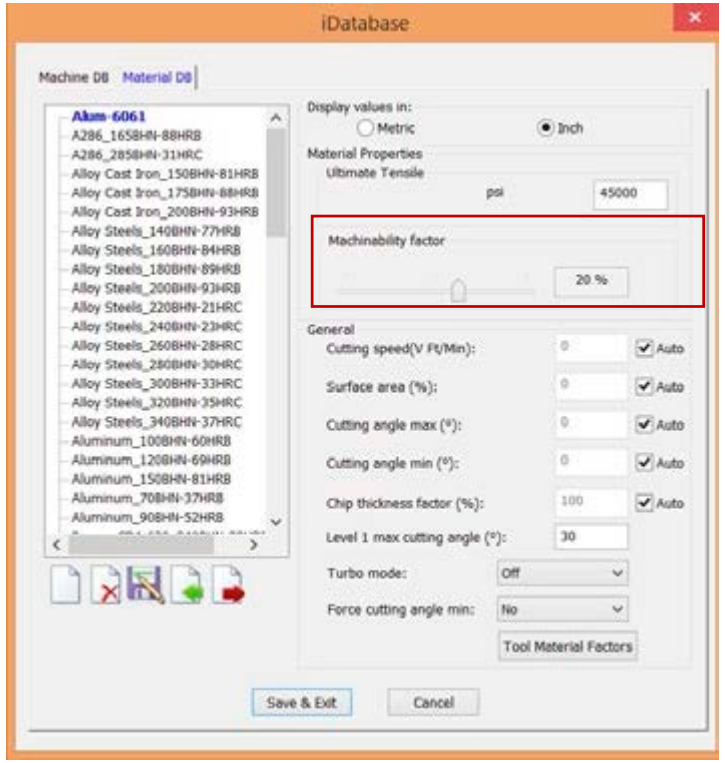

SolidCAM and ISCAR iMachining Cutting in the UK at Gardner Aerospace (Titanium)

The unique, revolutionary Milling technology

iMachining®

patent by SolidCAM

3.5 Minutes to Machine

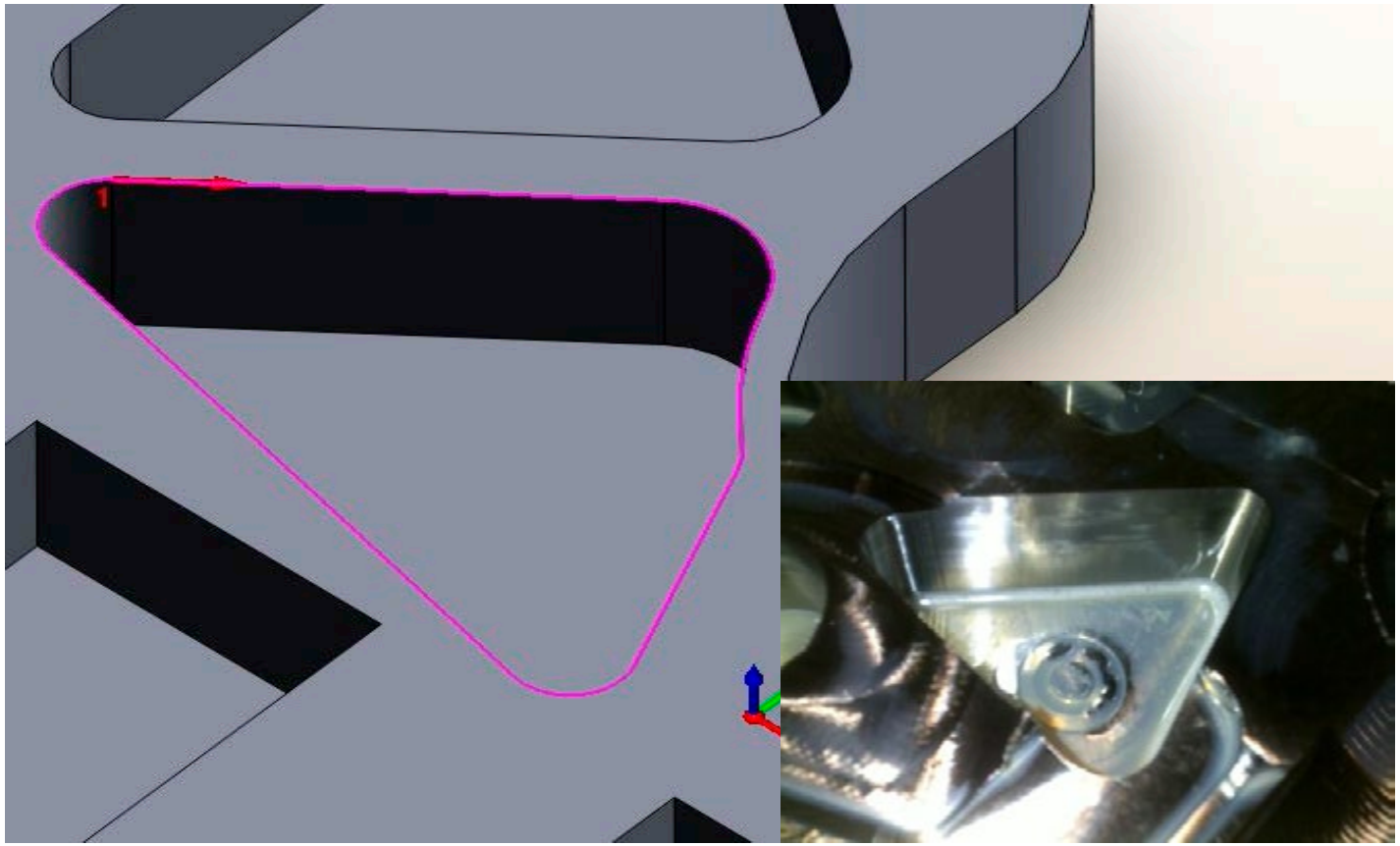

CATIA

14 Minutes to Machine

iMachining 2D savings in Aluminum

Customer: Terlidor produces **electronic products**.

Stock material size : 200 * 120 * 45 mm
Material : **AL- 6061**
The customer had **400 pieces** to produce

Depth of Cut : 38 mm

Standard cutting time:17 min

iMachining cutting time: **6 min**

Saving by iMachining: 65% saving

Total cycle time saving for the 400 piece series: **73 hr 20 min**

Read Full Success Story

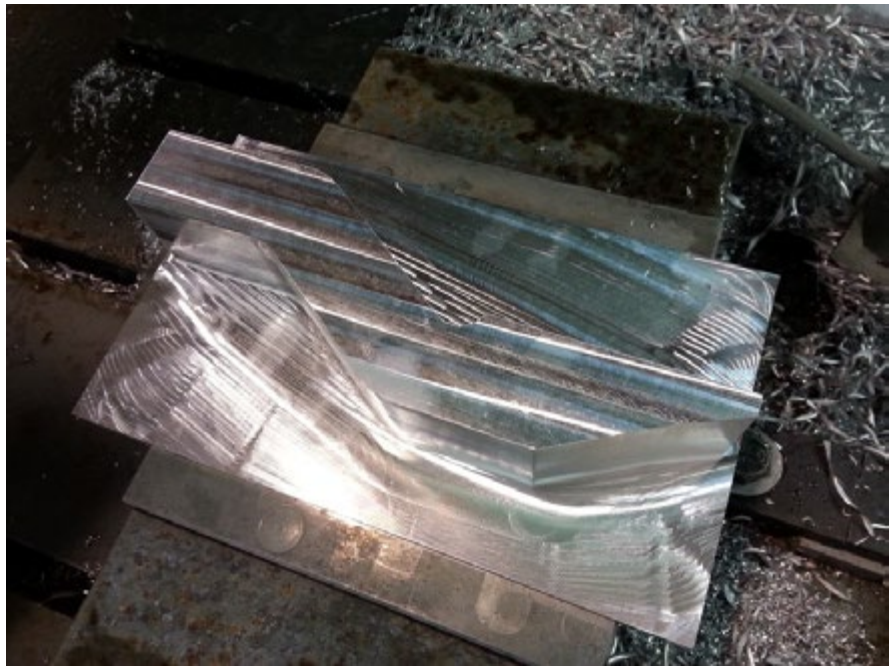

iMachining Successes
Benchmarks results and savings

iMachining 2D savings in Titanium

Customer: NIV Haritot

.

Material: **Titanium**

The customer had **75 pieces** to produce

Standard cutting time:17 min

iMachining 2D = **3.5 minutes**

Saving by iMachining: **80%** saving

Total time saving for **75 parts**: **16 hr 52 min**

Read Full Success Story

iMachining Successes
Benchmarks results and savings

iMachining 3D – Utilizing Proven iMachining 2D & Technology Wizard Algorithms

- Used both for **3D surfaced** and **prismatic parts.**
- **Optimized machining of each Z-Step**, using proven iMachining 2D technology
- **Deep roughing** uses the whole length of the flute, shortening cycle time and increasing tool life
- **Rest material machining** in small upward steps, optimized for constant scallop height, further shortens cycle time

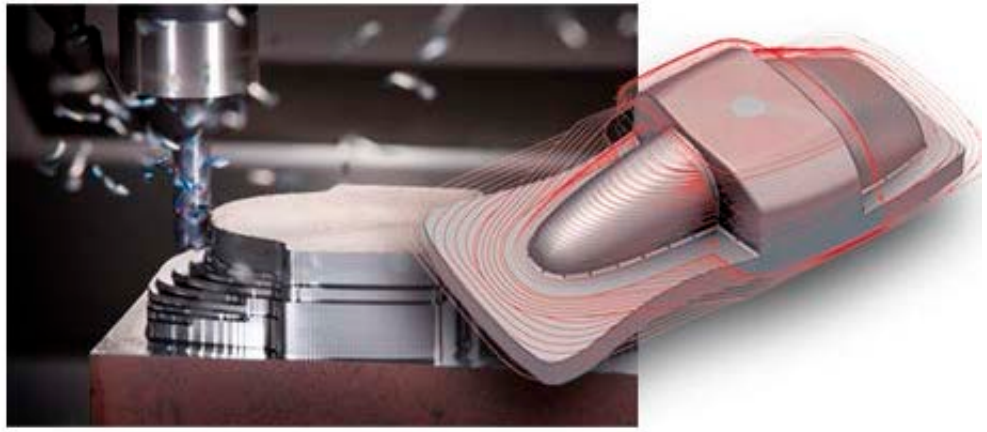

- **Intelligent localized machining** and **optimal ordering** eliminates almost all long positioning moves and retracts
- A **dynamically updated 3D stock** model **eliminates air cutting**
- Tool path automatically adjusts to **avoid contact between the holder and updated stock**
- Combined with **HSM Fin**ish, iMachining 3D provides a complete machining solution for 3D parts.

1. Optimal Z-Slice Machining

- Uses proven 2D iMachining algorithms to generate Morphing Spiral Tool Paths
- Analyzes and determines which volume to remove next, at what Z level
- Achieves shortest possible cycle time

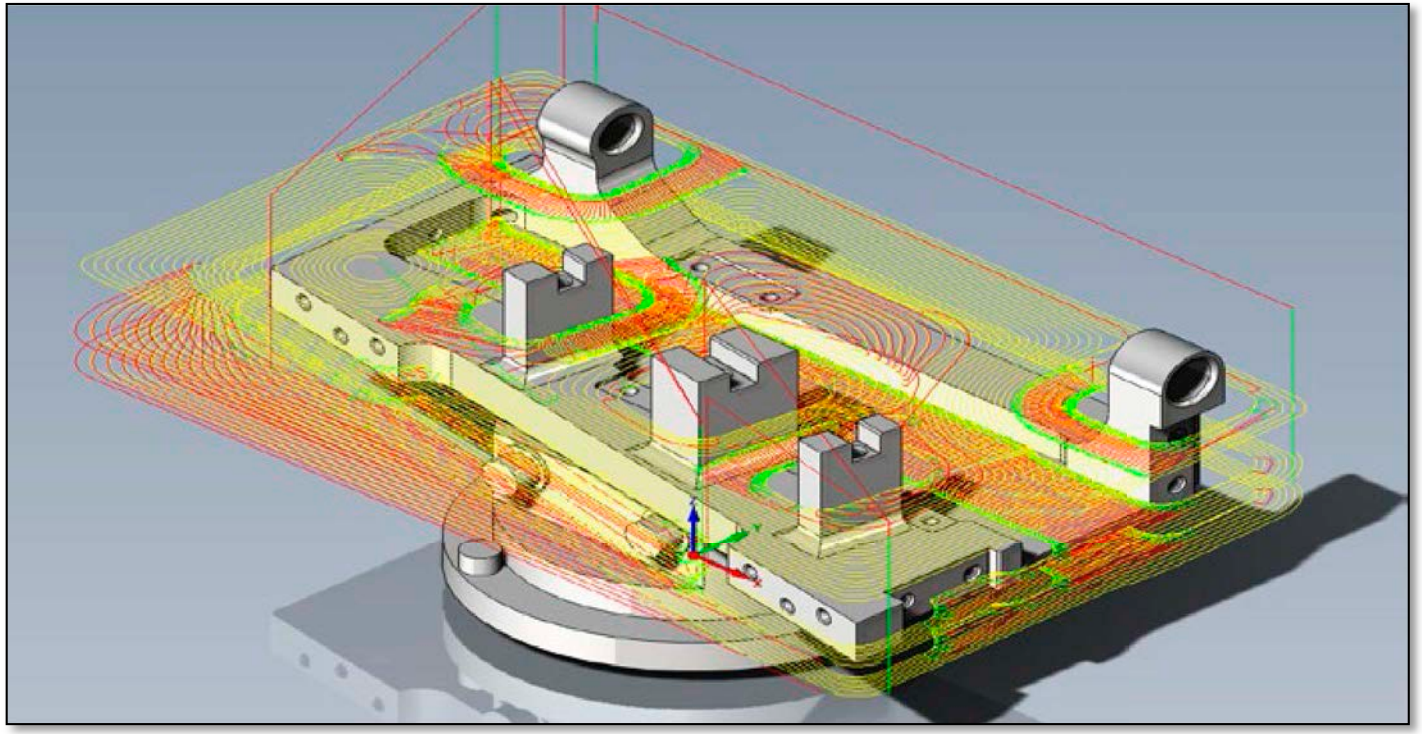

2. Deep Step-Down Roughing

- Takes full depths of Step-Down cuts first, generating roughing tool paths

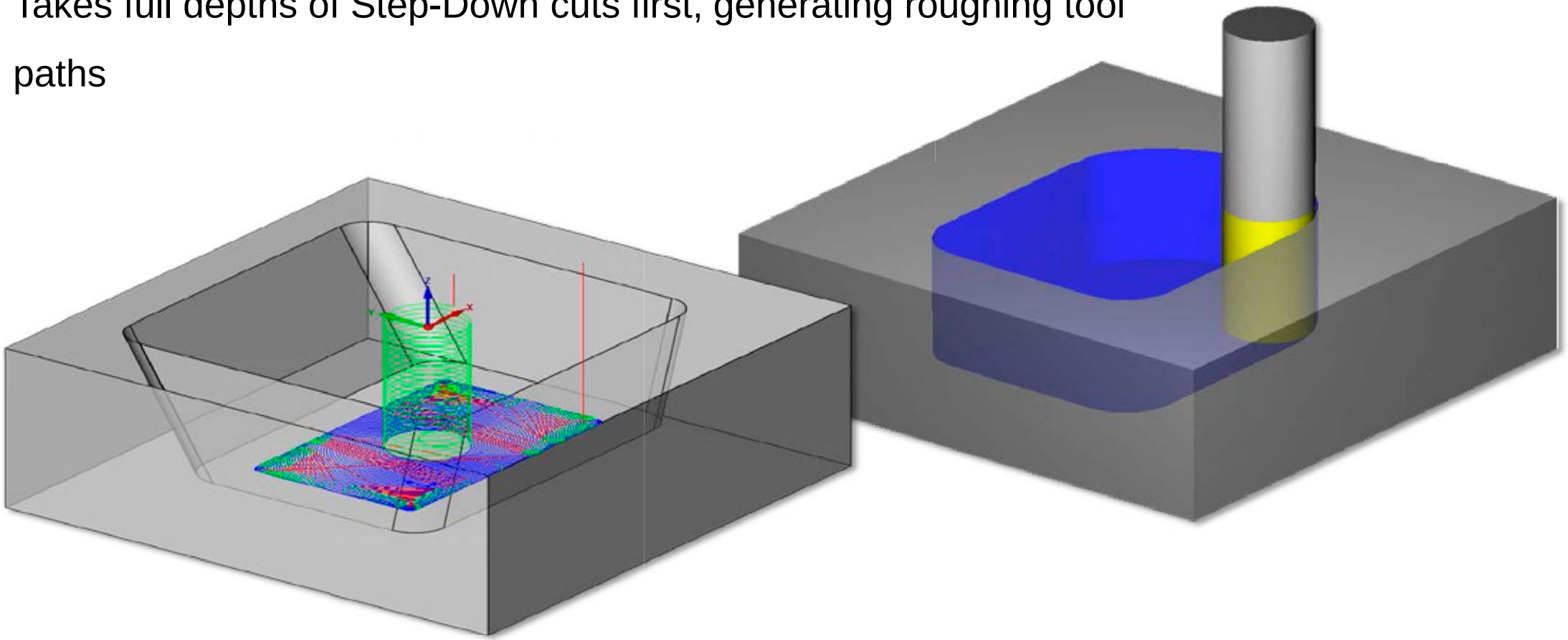

Tool takes full depth of cut first...

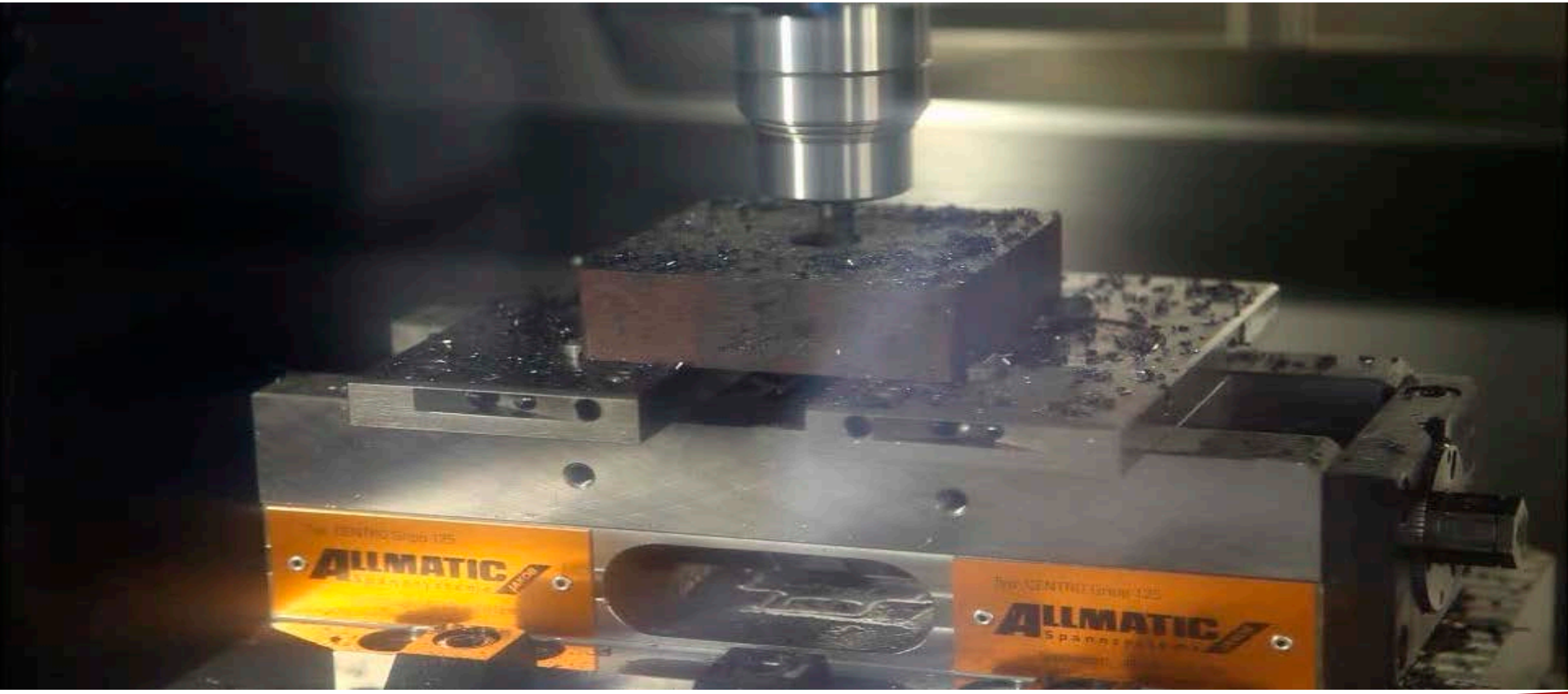

3.1 Scallop-Driven Intelligent Step-Up

- Rest Roughing in Step-Up mode removes rest material on slopes
- Per slope, Step-Up changes dynamically to maintain same Scallop size throughout operation

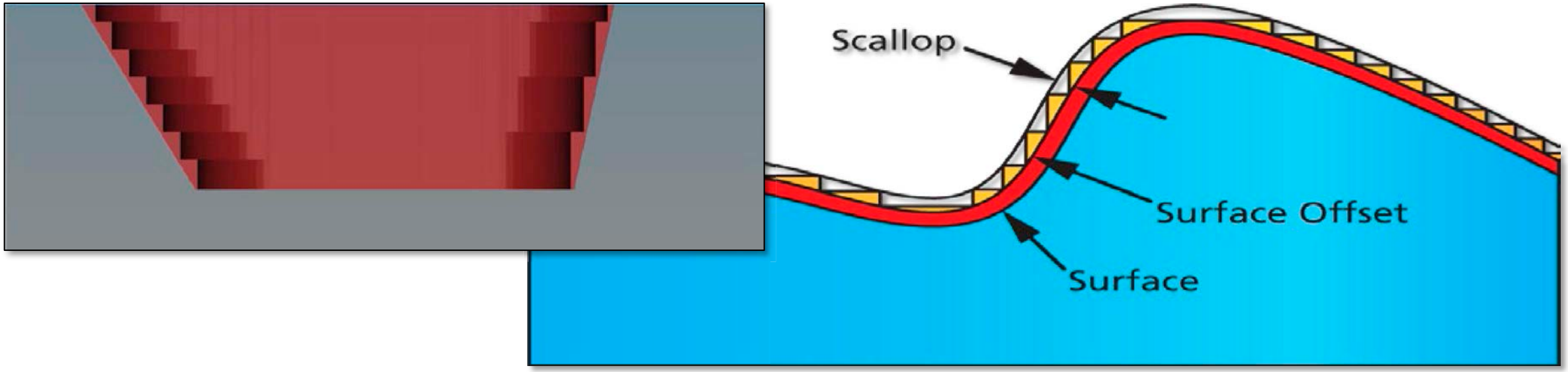

3.2 Scallop-Driven Intelligent Step-Up

- Scallop value set by user - important parameter in calculation of 3D iMachining tool path

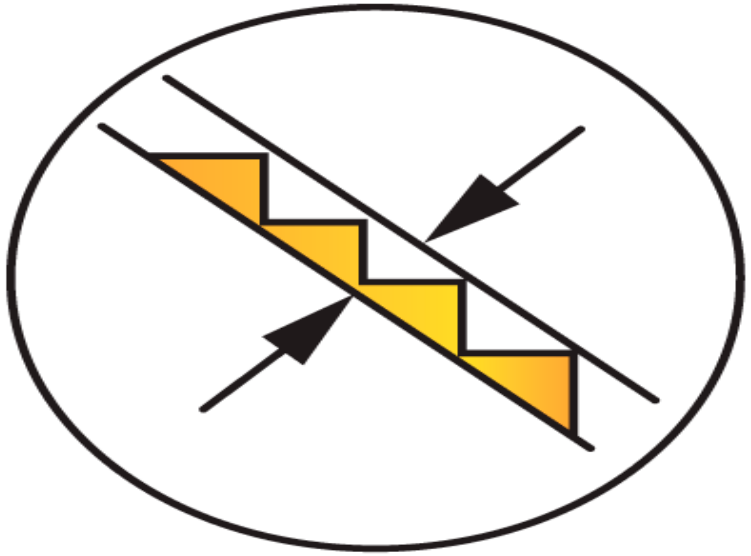

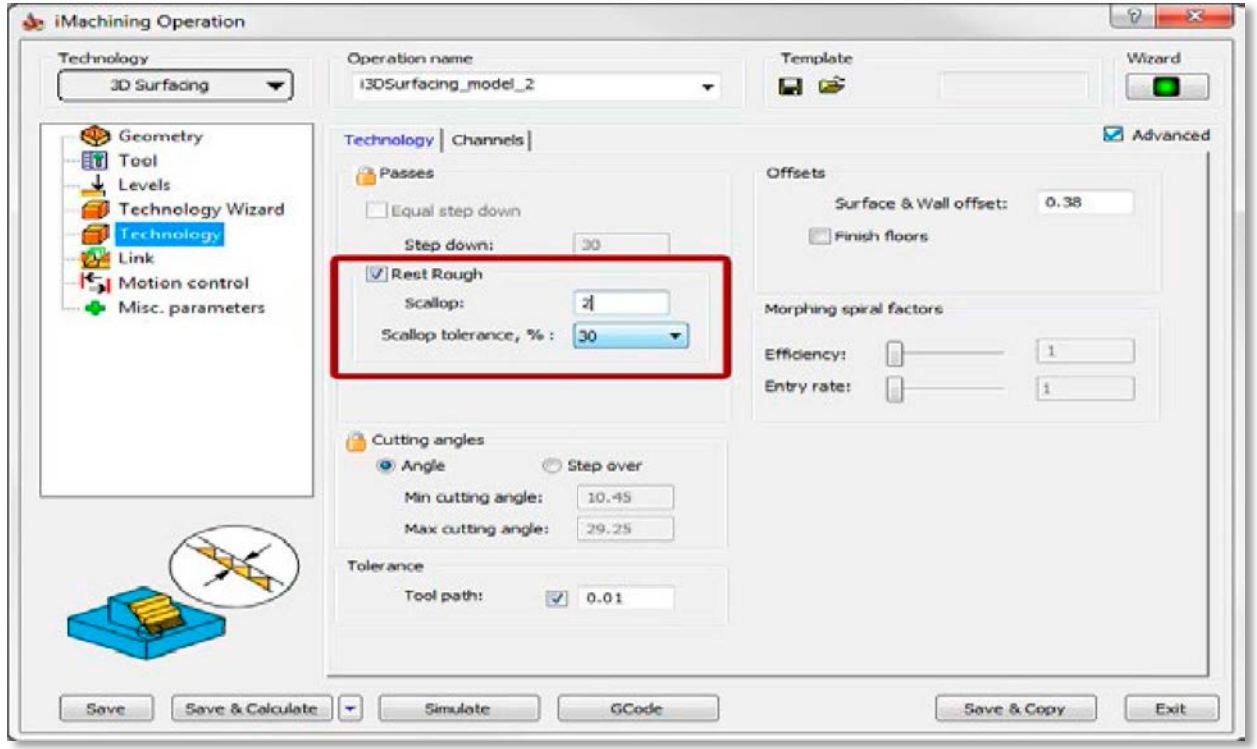

The difference between the peak and the valley is the Scallop.

Step-up rest machining on sloped surfaces

- During the **Step up procedure**, the axial depth of cut gets smaller, every time a new higher step is machined.

- iMachining **increases the feed and engagement angle of the tool paths that machine the higher step**, by the exact amount required to maintain the Wizard specified constant load on the tool, as it cuts the smaller depth.

- As a result, the **machining time of that step is shorter** than it would have been without the feed and angle increase.

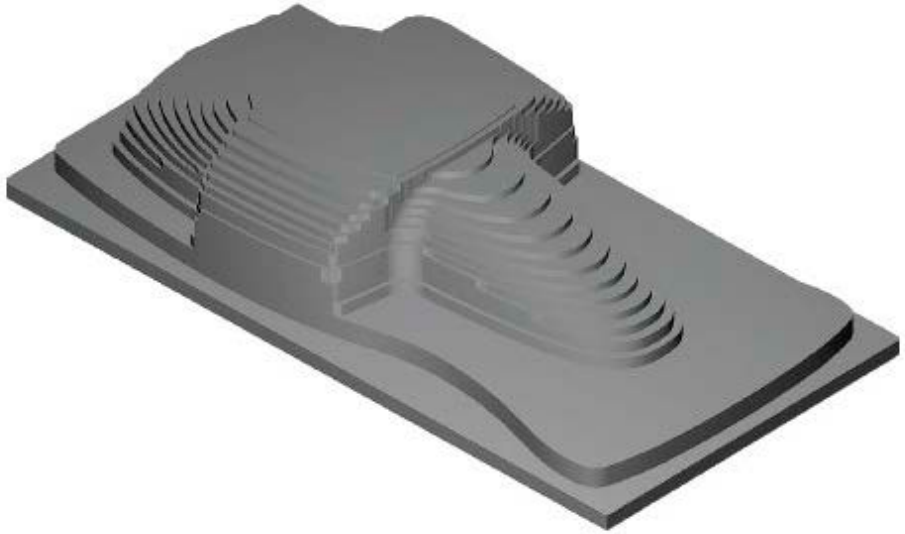

4. Negligible Repositioning

- Reduced retracts, long position moves and non-cutting motions by:
  - Tool Path Sorting
  - 3D Z-Level Linking

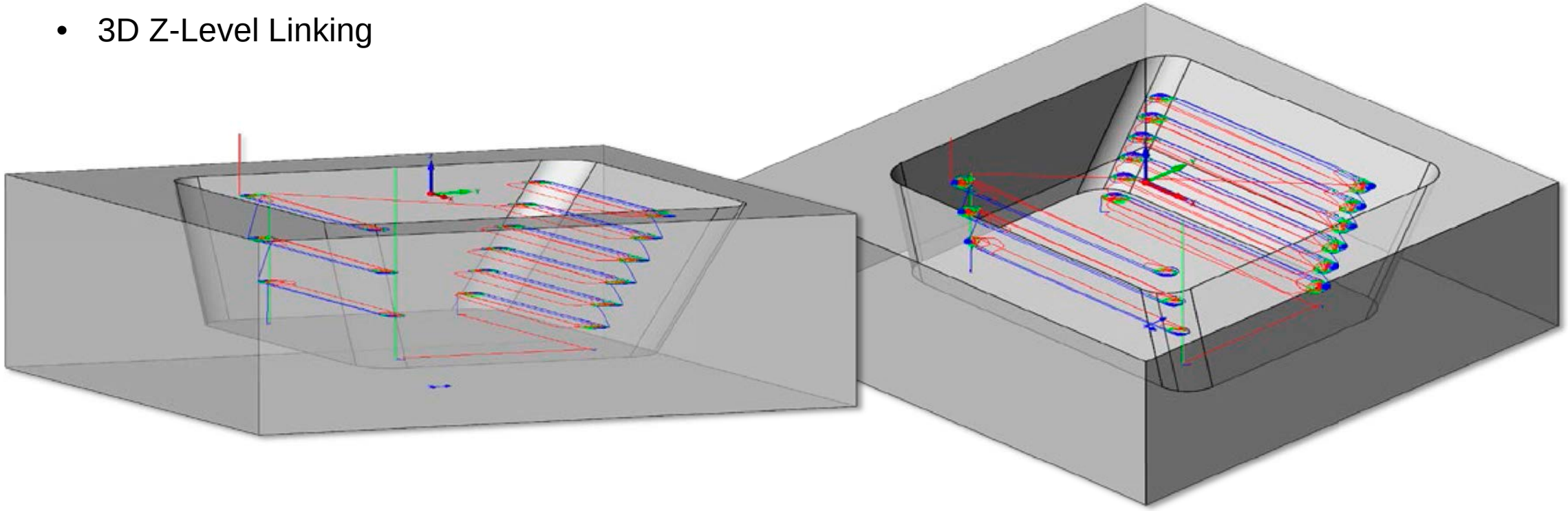

Step-Up mode…

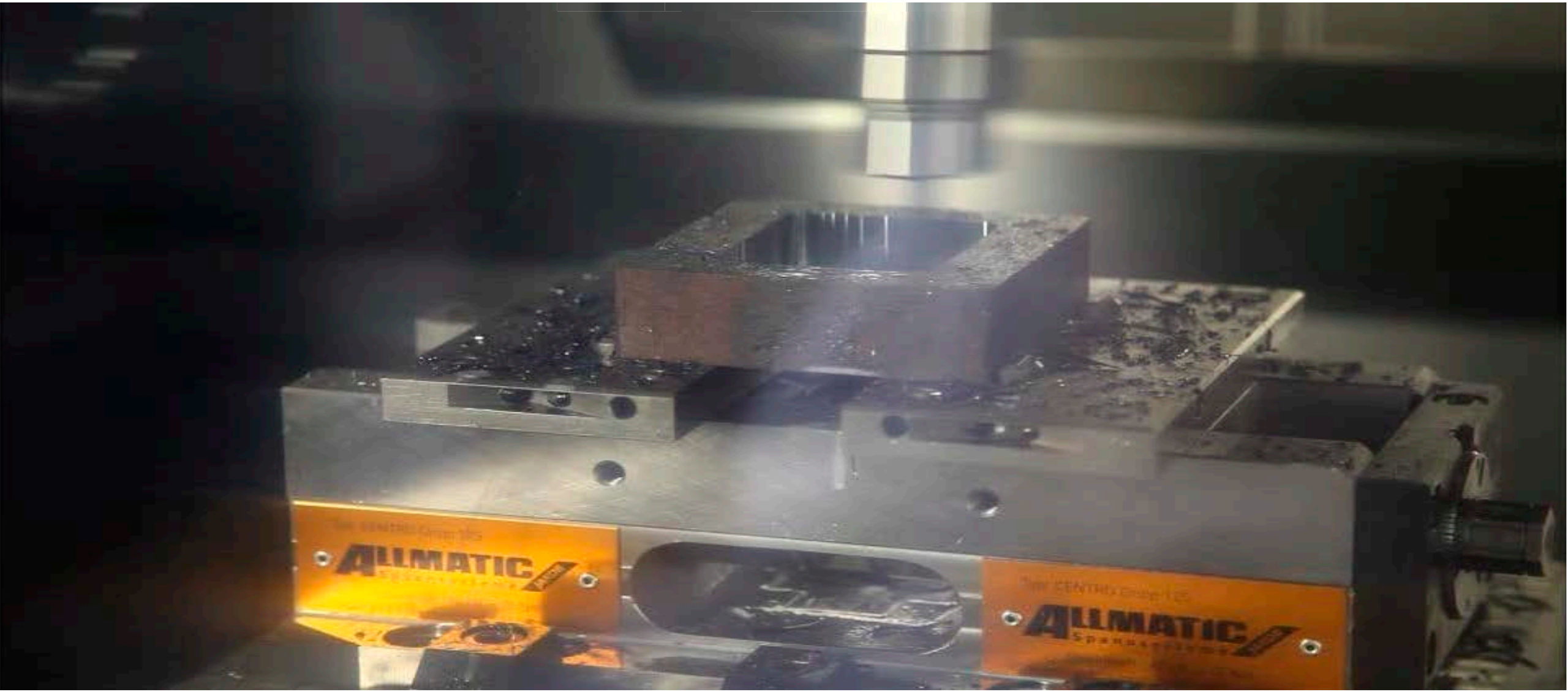

5. No Air Cutting

- Tool path optimized when cutting of Updated Stock
  - Cuts only where needed

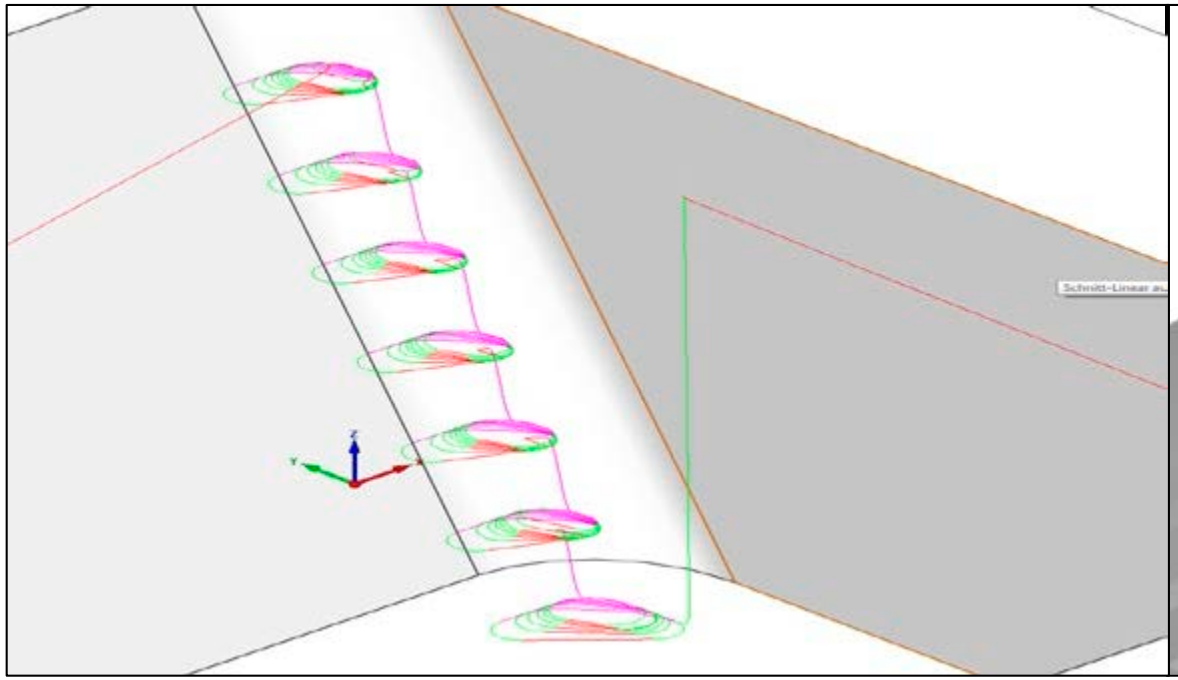

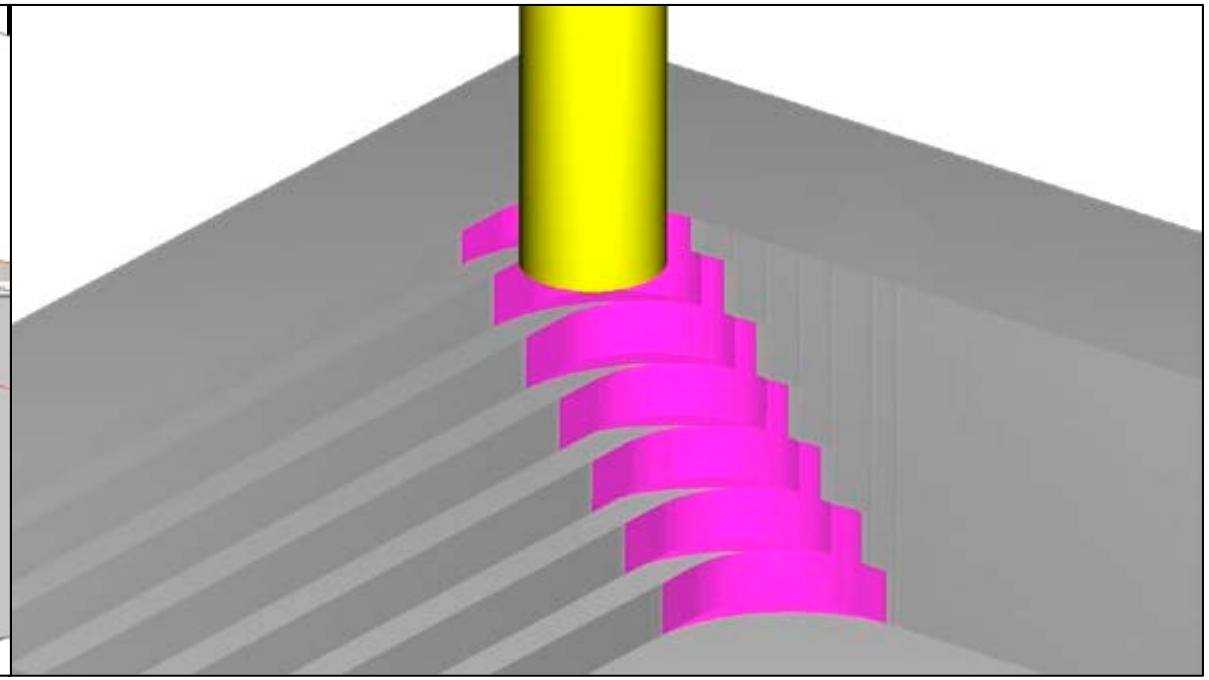

Tool cuts only where needed...

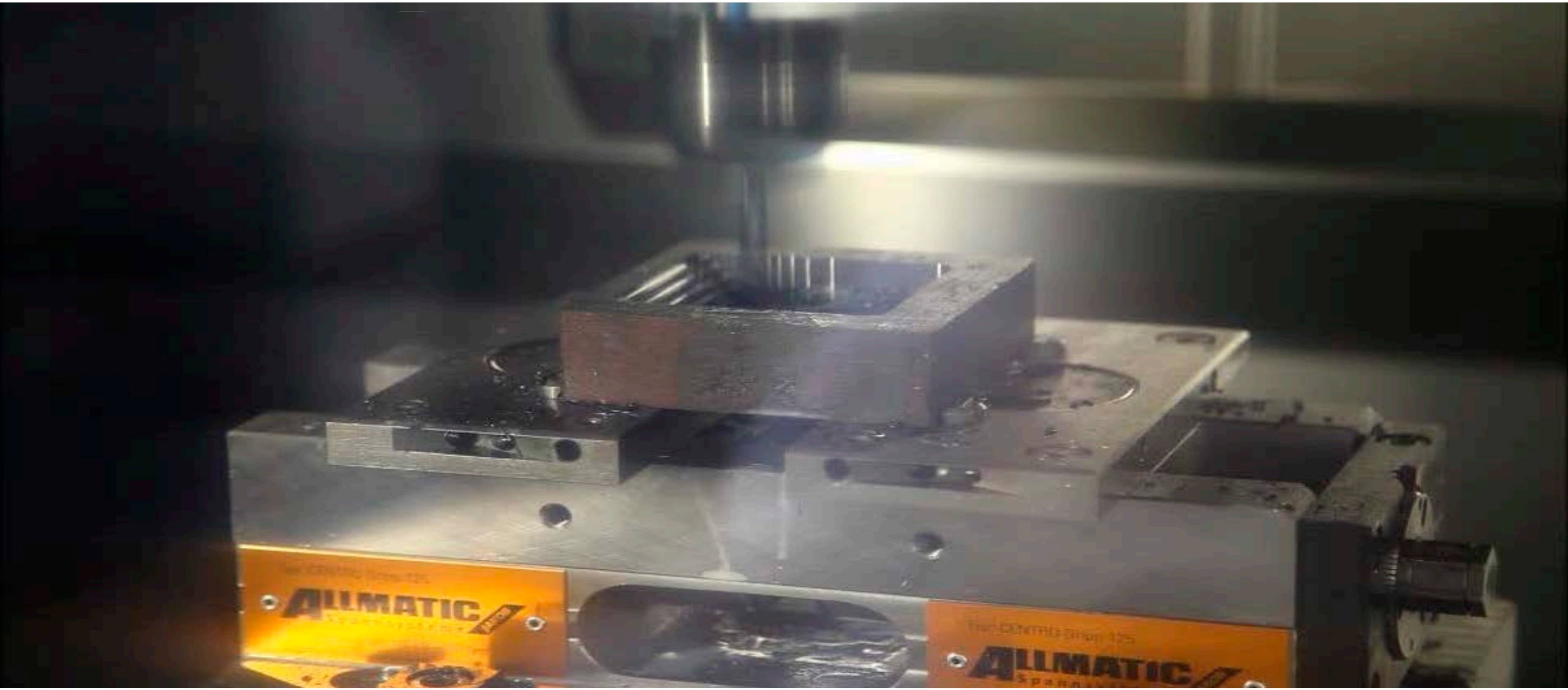

6. Tangent Lead-in / Lead-out Arcs

- Automatically performed when entering and exiting “the cut”
- Smooth motion allows for faster, more efficient machining
- Increases tool and machine life

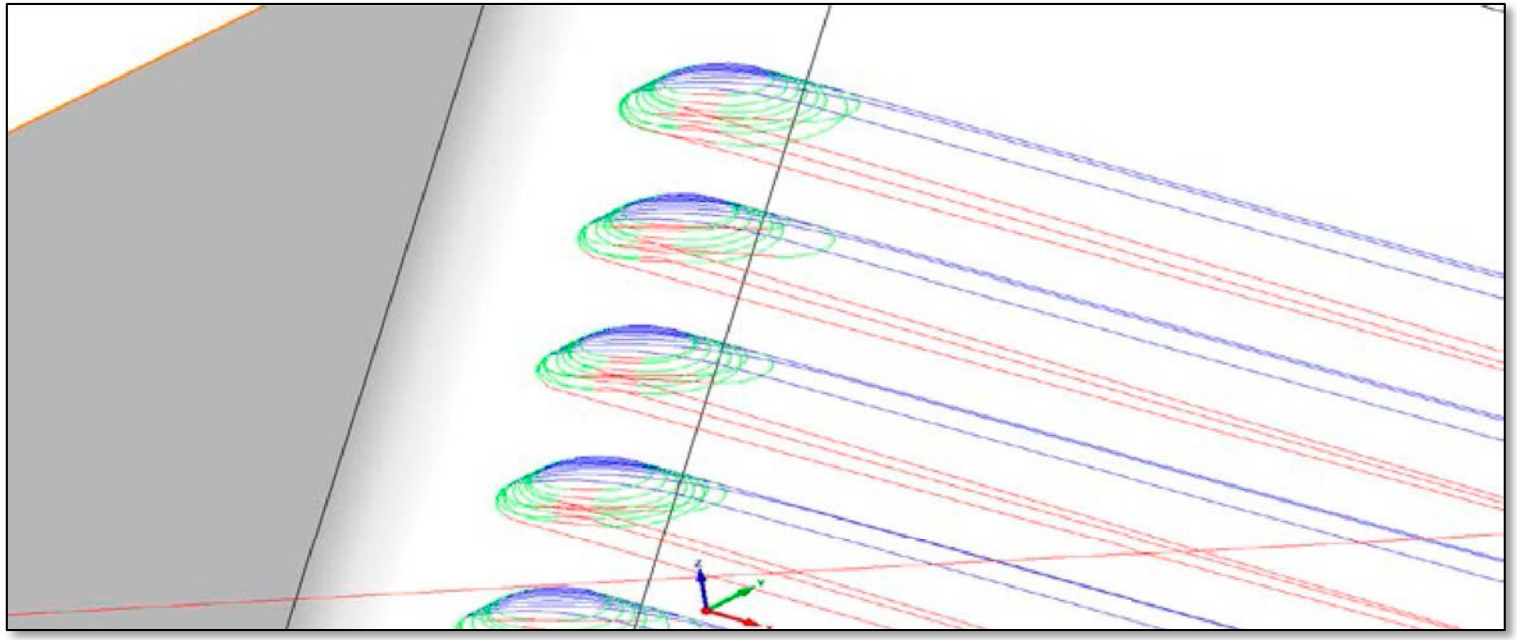

7. Automatic Z-Level “Cutting conditions” adjustments

- “Cutting conditions” automatically adjusted at every Z level
- Technology Wizard algorithms maximize performance and efficiency

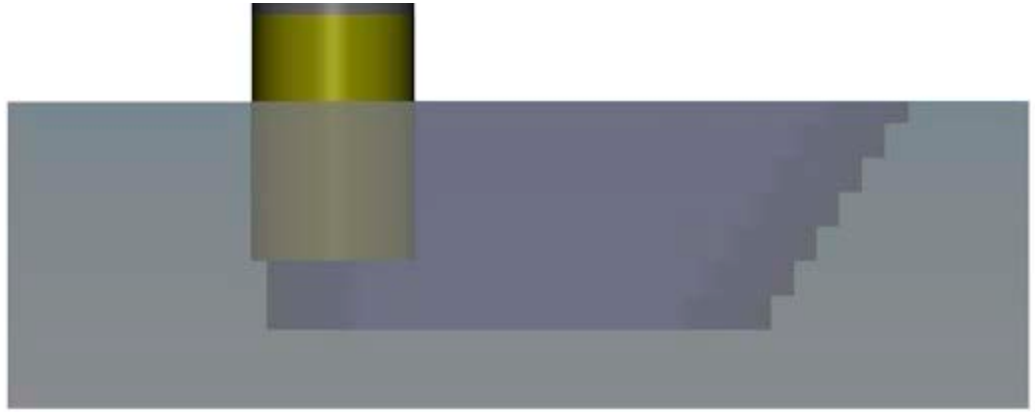

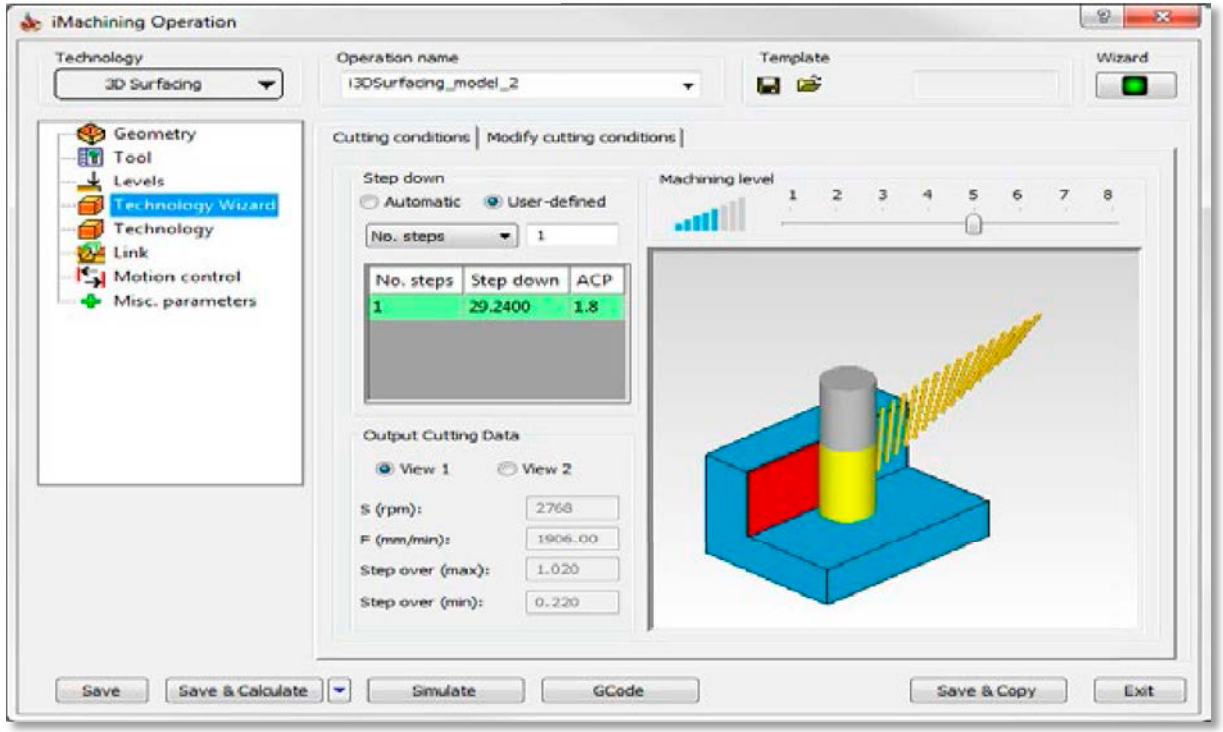

8. Wizard automatically determines “Cutting conditions”

- Utilizes proven Technology Wizard algorithms, like 2D iMachining
- “Cutting conditions” generated for step down, same as 2D iMachining
- Feed increased for step up, where there is less material to cut
- Achieves shortest possible cycle time

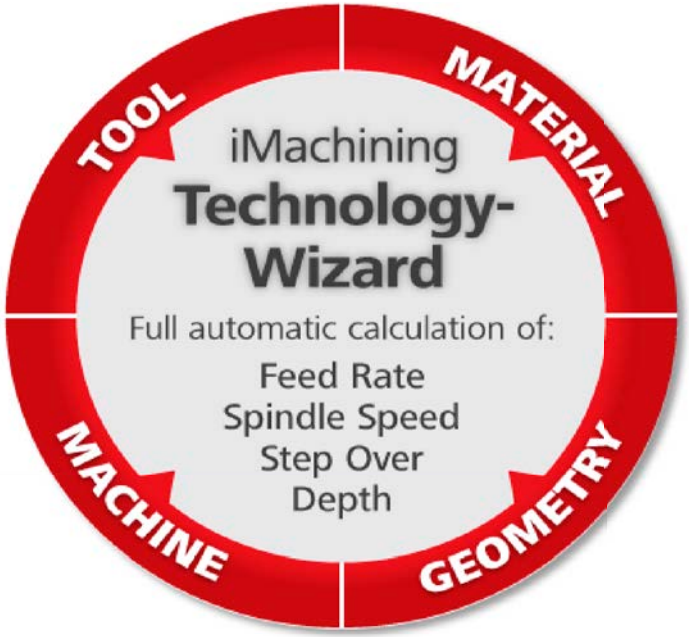

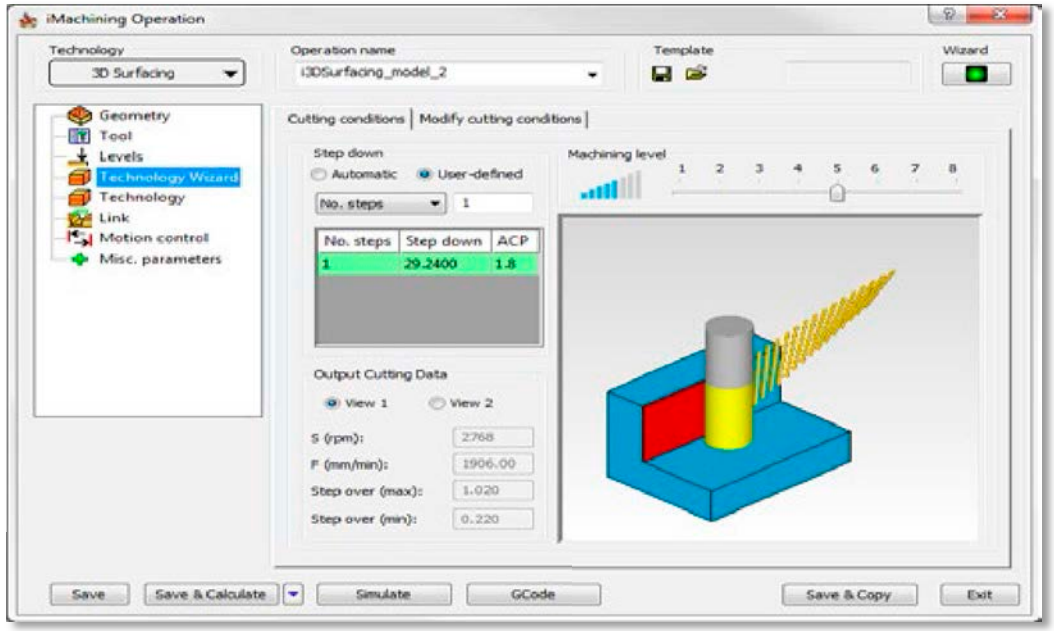

iMachining 3D cutting video

iMachining 3D for Prismatic Parts

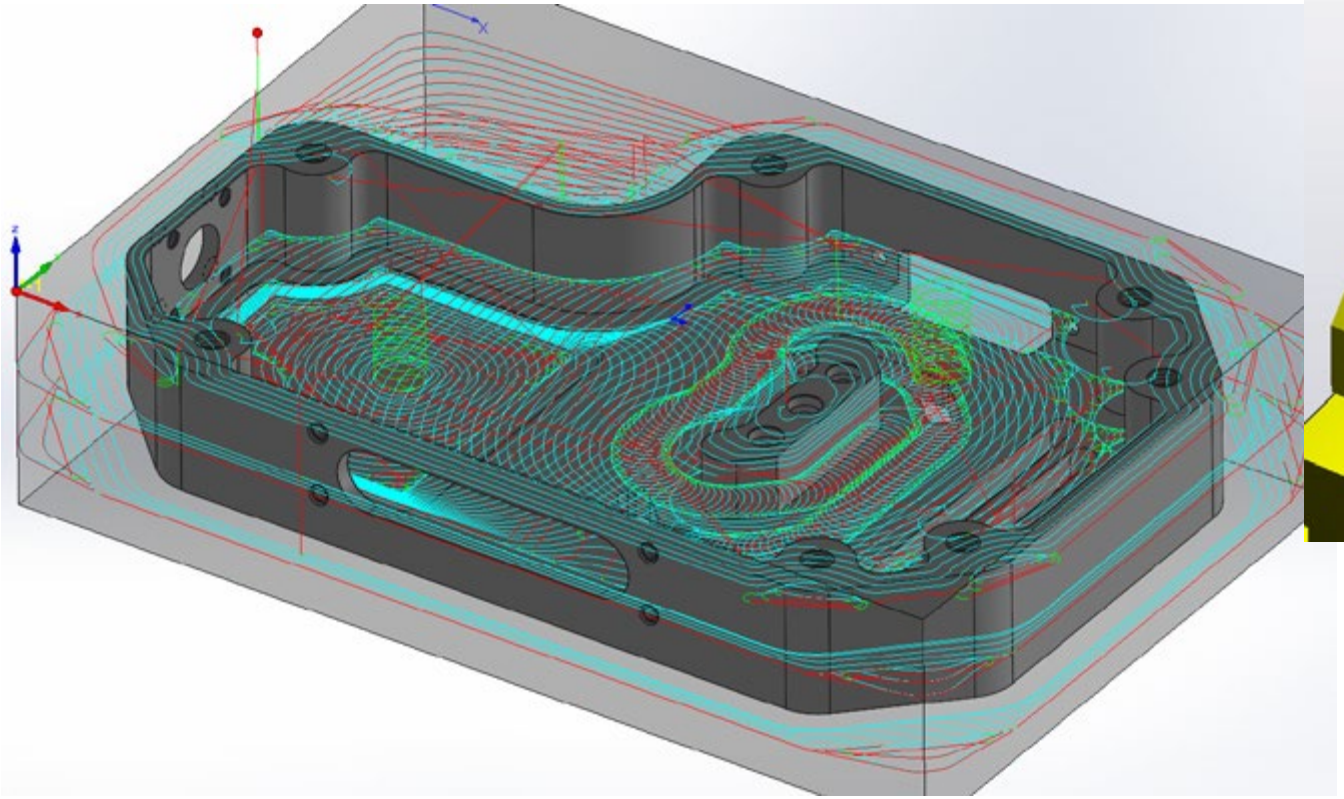

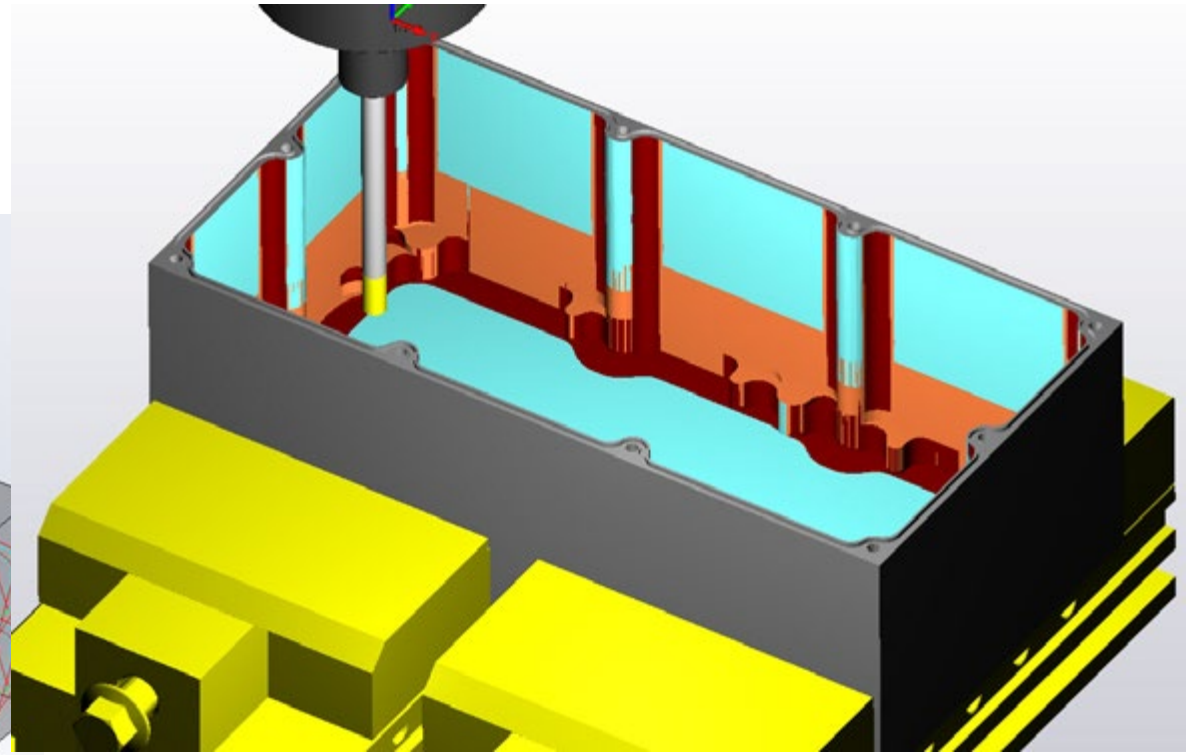

iMachining 2D vs iMachining 3D for Prismatic Parts

- **iMachining 2D** requires user definition for each geometry (its chain and depth), resulting in several operations

- **iMachining 3D** automatically identifies geometries and their depth, performing Roughing and Rest Roughing in a single operation

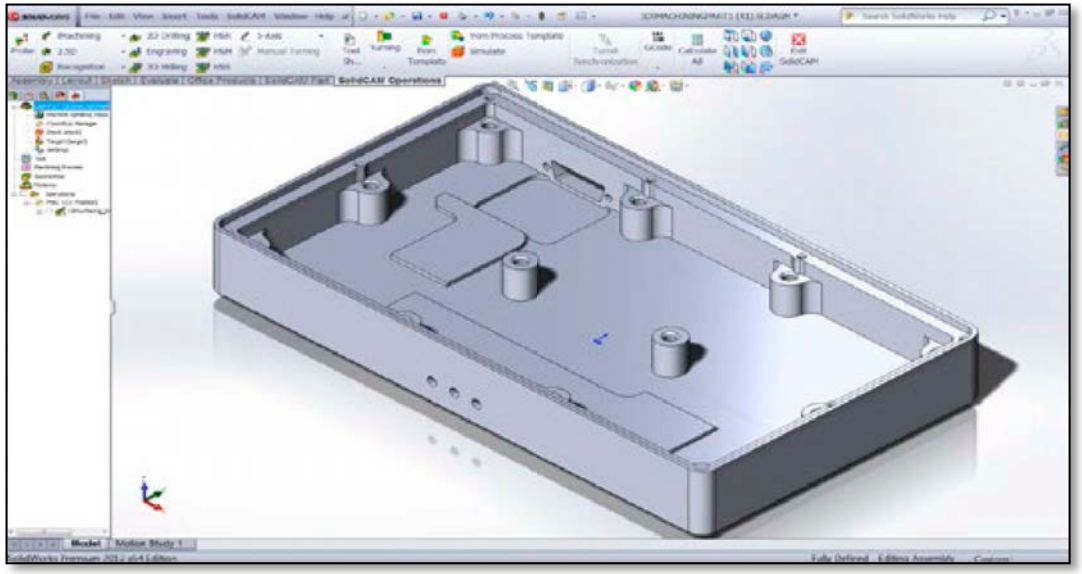

Prismatic Part Programmed with iMachining 2D

- **iMachining 2D** requires user definition for each geometry (its chain and depth), resulting in several operations

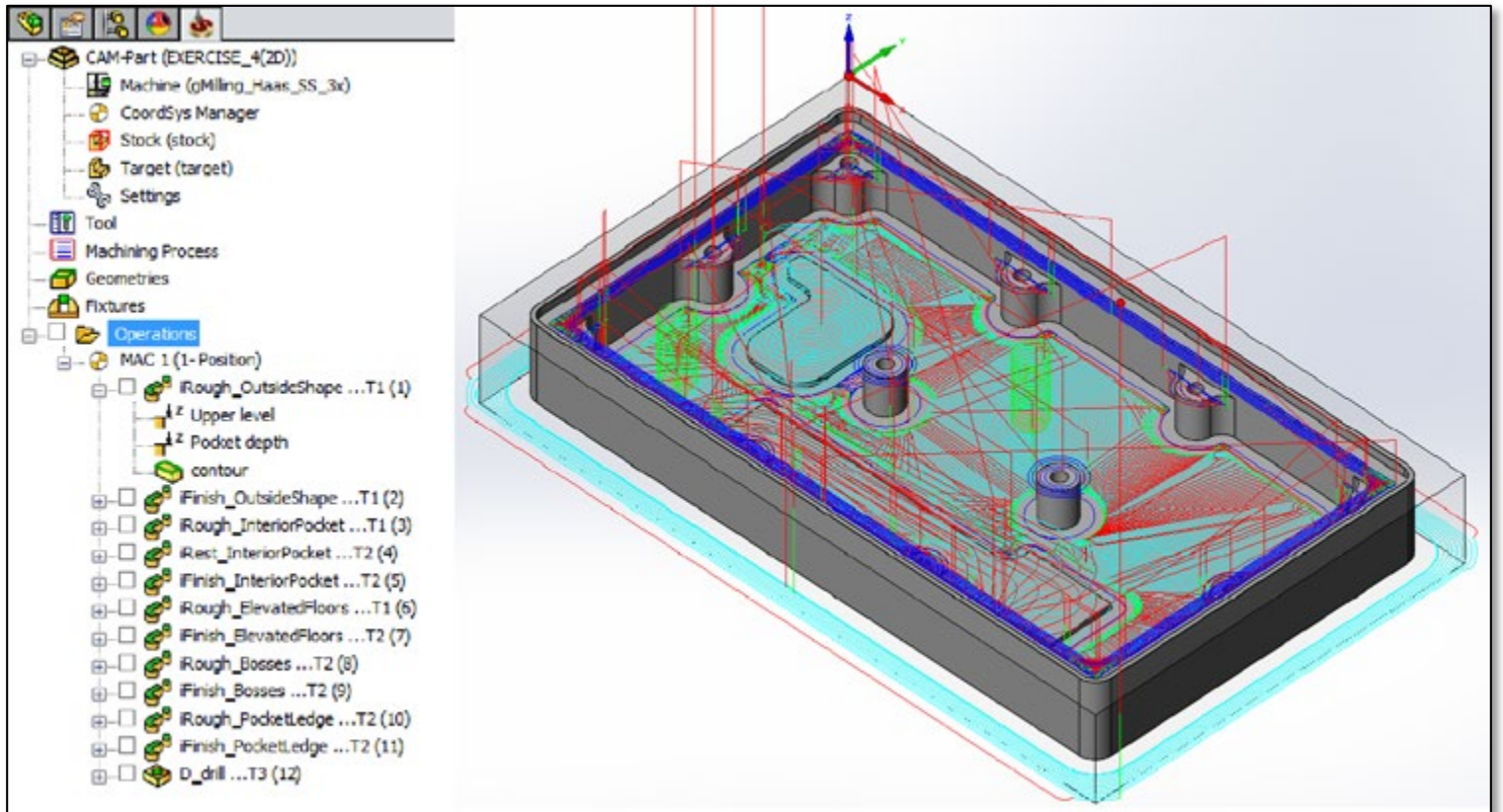

Programmed with iMachining 2D

Prismatic Part Programmed with iMachining 3D

- **iMachining 3D** automatically identifies geometries and their depth, performing Roughing and Rest Roughing in a single operation

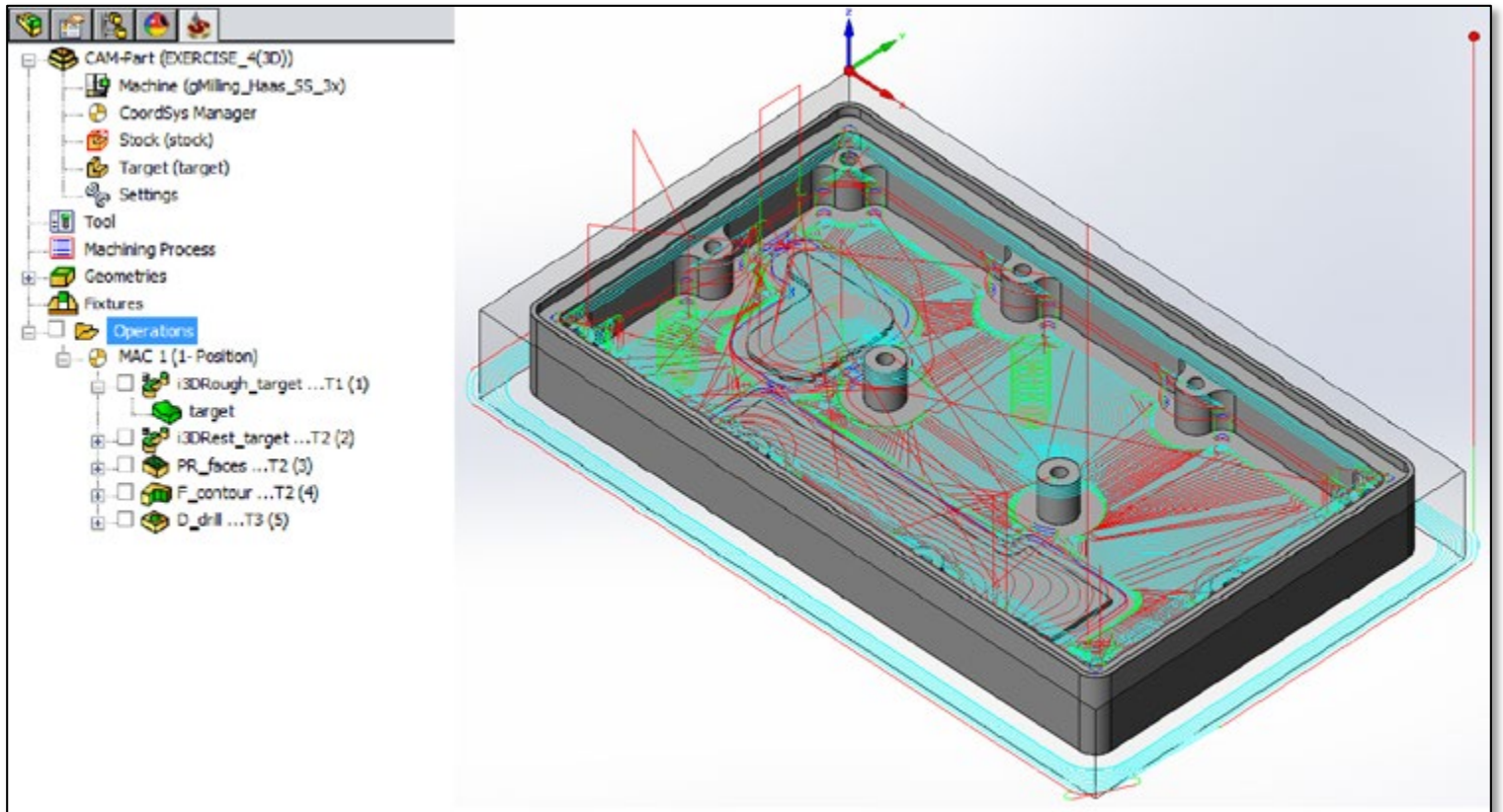

Programmed with iMachining 3D

Roughing and Rest Machining of Prismatic Parts with iMachining 3D

- Morphing spiral tool paths are generated in iMachining 3D, using proven iMachining 2D algorithms

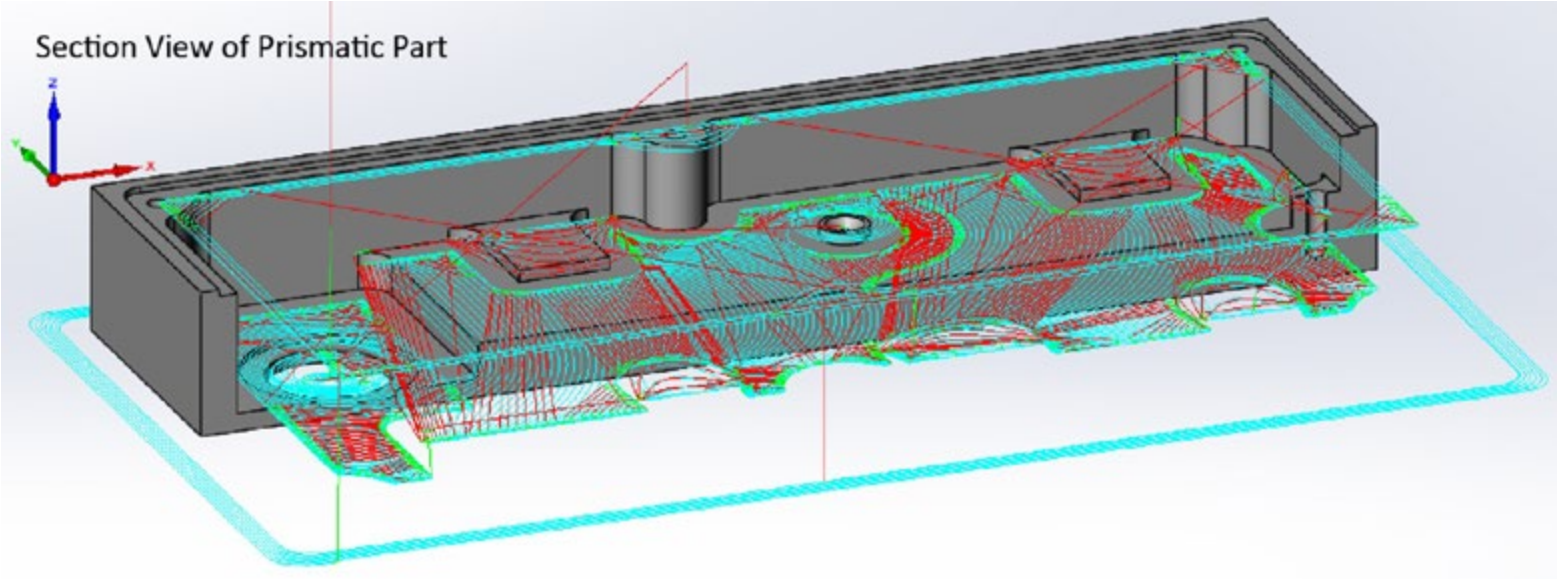

- Performance and efficiency is automatically maximized to achieve shortest possible cycle time
  1. Optimized Depths of Cut
  2. Optimal Sorting of 2D regions
  3. Optimal Positioning between 2D regions

Optimized Depths of Cut in iMachining 3D

- **iMachining 3D** performs the <u>deepest Step downs</u> first to remove the most amount of material
  1. Maximizes Material Removal Rate (MRR)
  2. Increases tool life
  3. Eliminates the need for full retracts

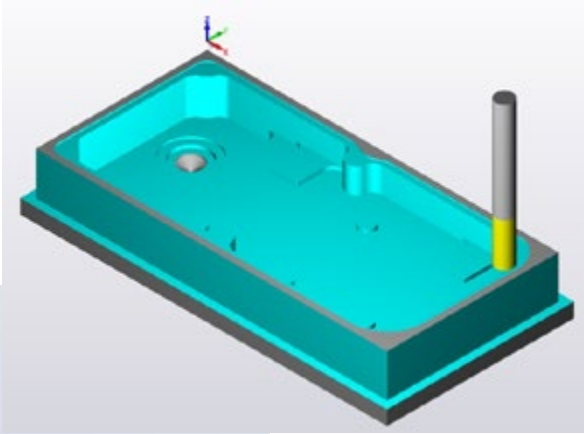

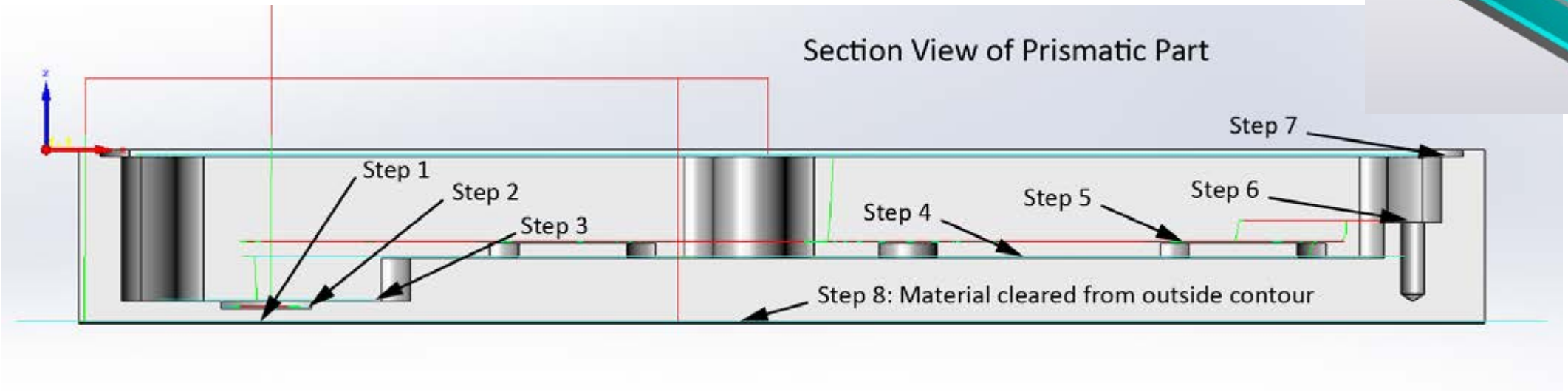

To achieve this with multiple iMachining 2D operations, it would be programming time intensive.

Optimal sorting of 2D Regions in iMachining 3D

- iMachining 3D performs intelligent sorting of **2D toolpath regions,** located at different Z-levels
  1. 3D Z-level ordering of 2D toolpath regions
  2. Localized machining reduces non-cutting moves

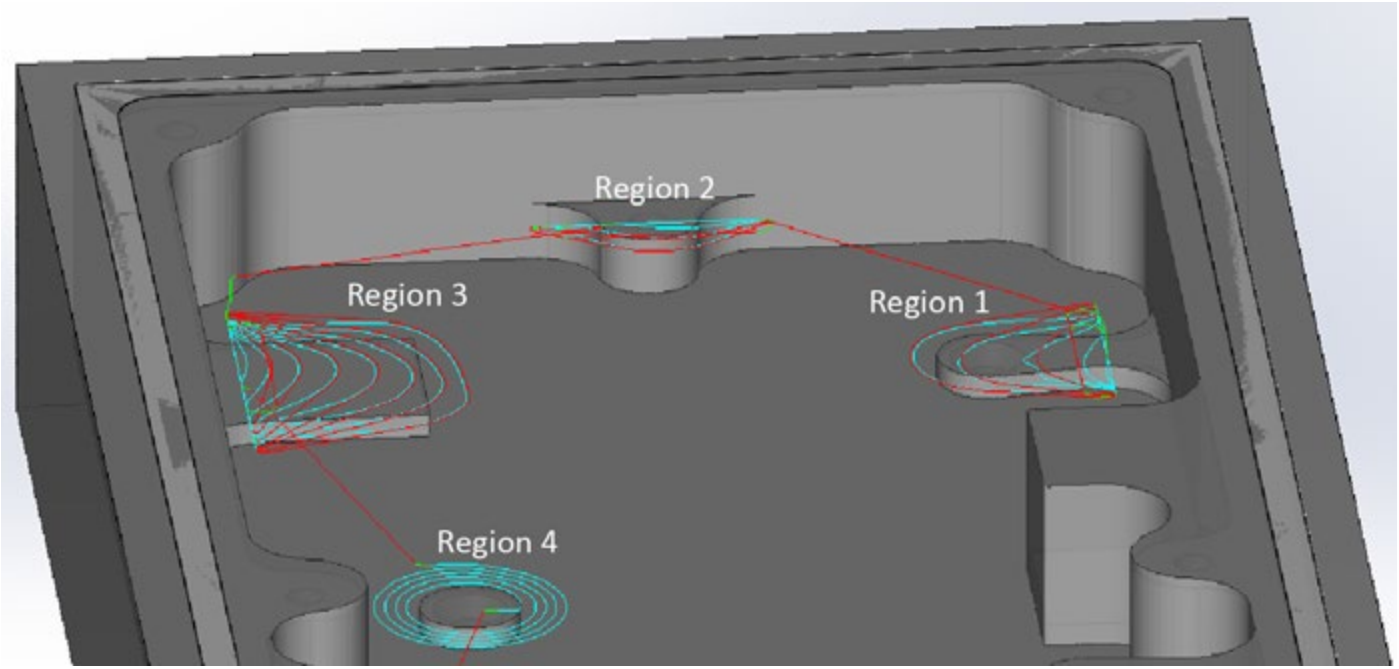

To achieve this with multiple iMachining 2D operations, it would be programming time intensive.

Optimal positioning between 2D regions in iMachining 3D

- iMachining 3D performs intelligent positioning between 2D toolpath regions
  1. 3D Z-level linking between 2D tool path regions
  2. Localized machining reduces long position moves

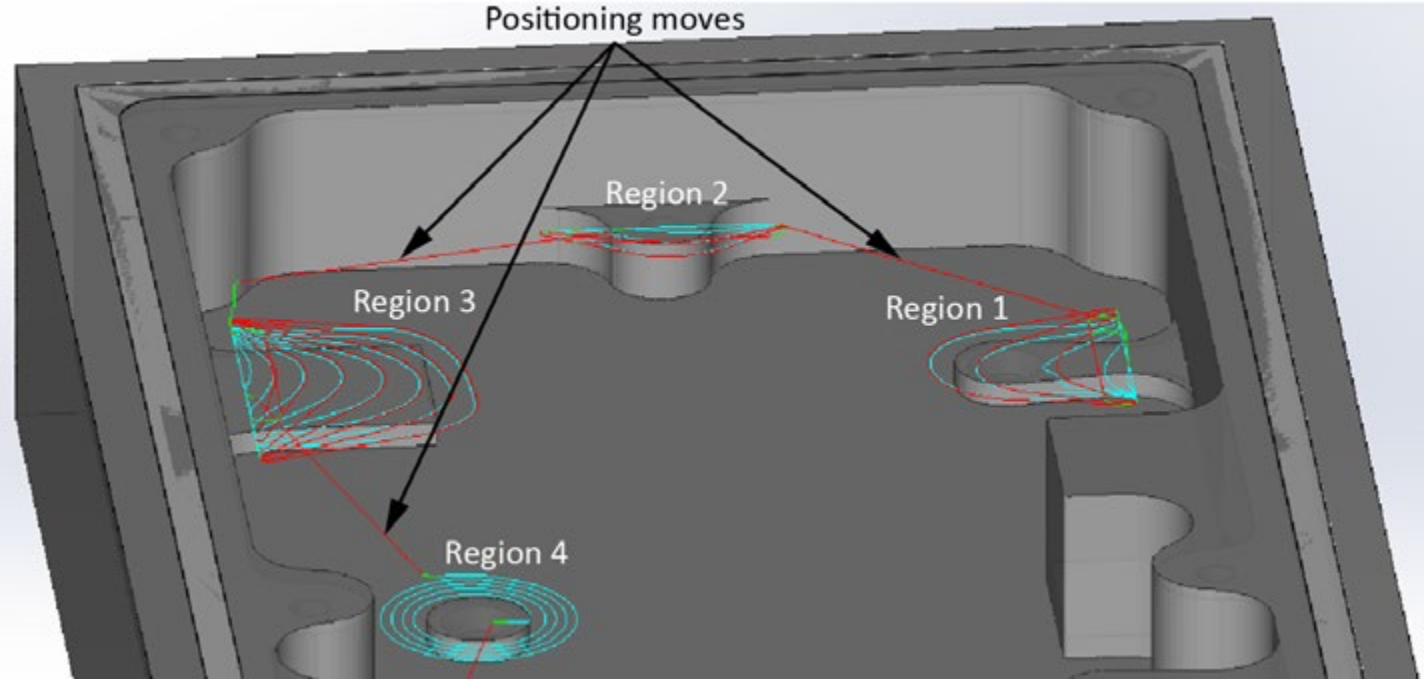

With multiple iMachining 2D operations, full retracts will occur between 2D regions.

Machining a Prismatic Part with iMachining 3D

- Define the **Stock** and **Target** models
- An **Updated Stock model** is automatically generated after each operation and is used as the starting Stock model for the next operation

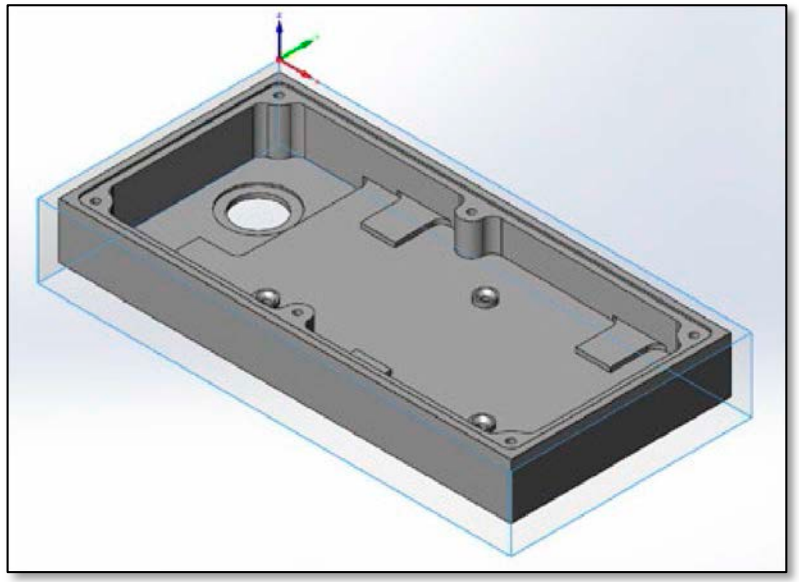

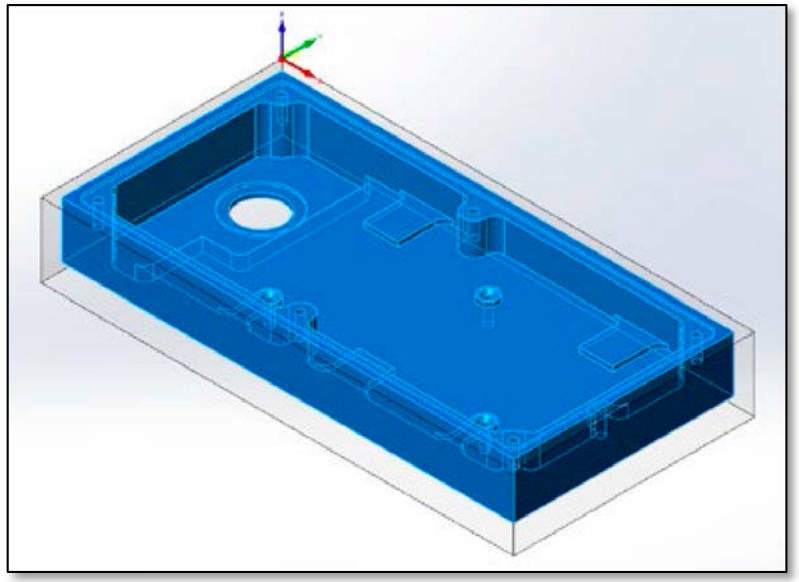

Note: For both models, it's important to set a **small Facet tolerance value** (Recommended: 0.01 mm/0.0004 in), because of the precision needed to remove all material (e.g., primarily in corners).

Roughing & Rest Roughing with iMachining 3D

- The Roughing and Rest roughing is performed in a single operation
  - All areas where the roughing tool can fit will be machined

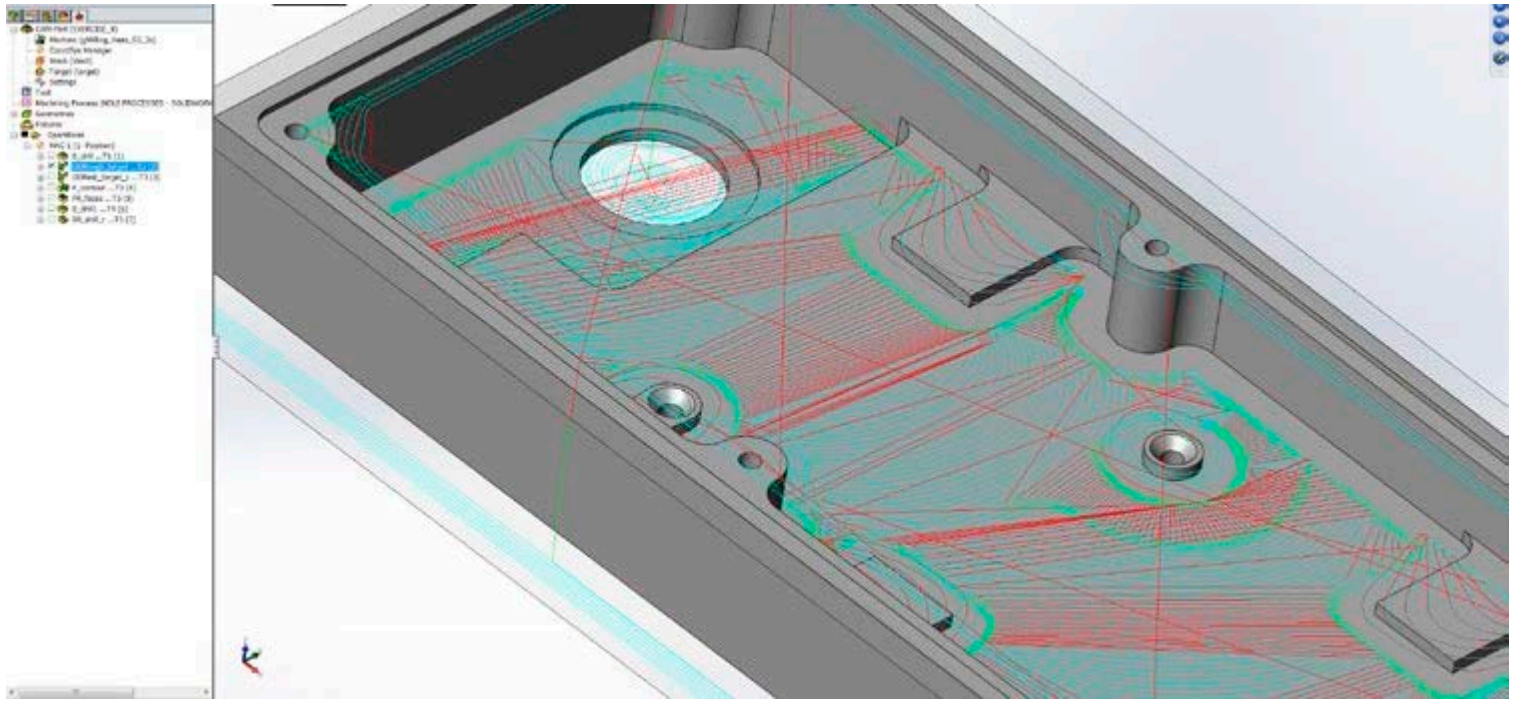

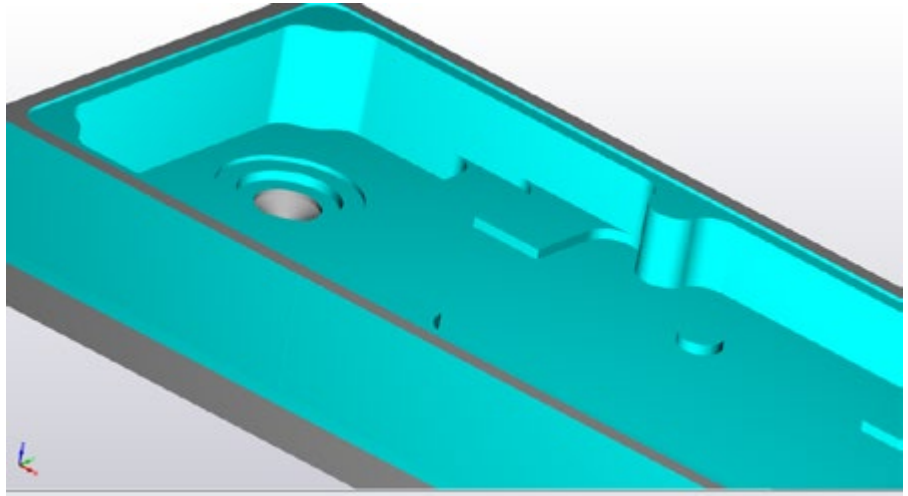

Rest Machining with iMachining 3D

- With a smaller tool, any number of **rest machining** operations can be performed
  - According to the **Updated Stock model** and always working in the mode of Cut only the Rest Material, only the tight areas and corners will be machined

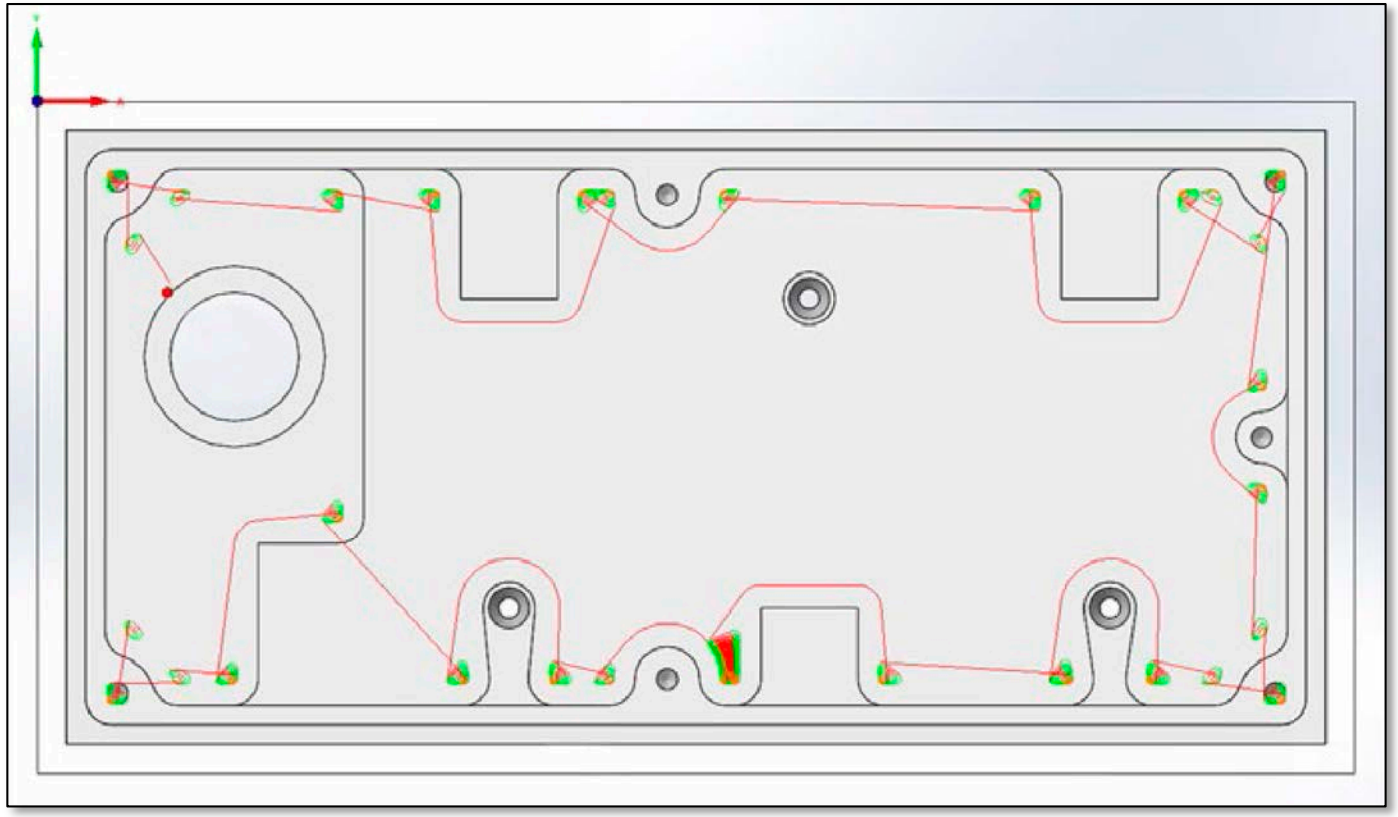

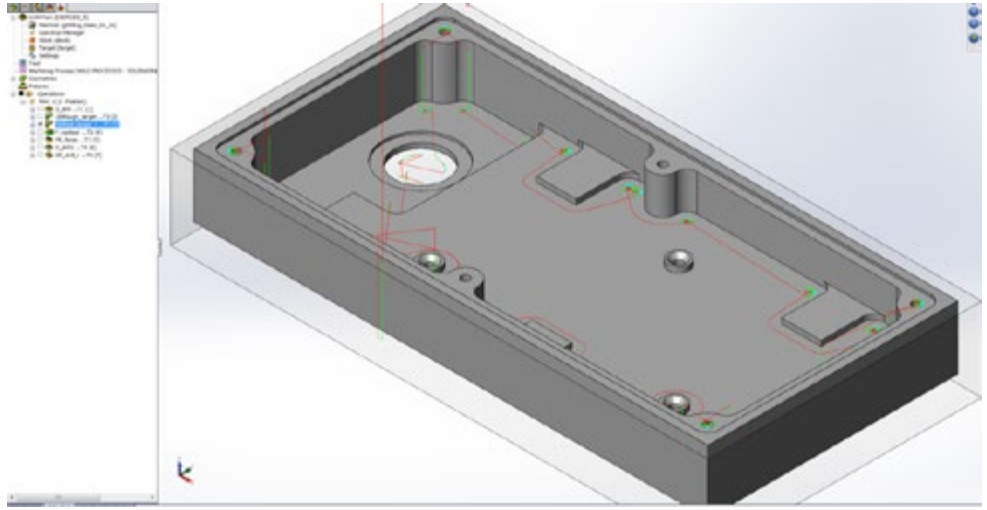

Scallop Setting when Rest Machining Prismatic Parts with iMachining 3D

- On the Technology page, the **Scallop default value** is based on the **tool diameter**.
- <u>Best Practice</u>: For prismatic parts, set the **Scallop value** equal to your desired **Wall offset**

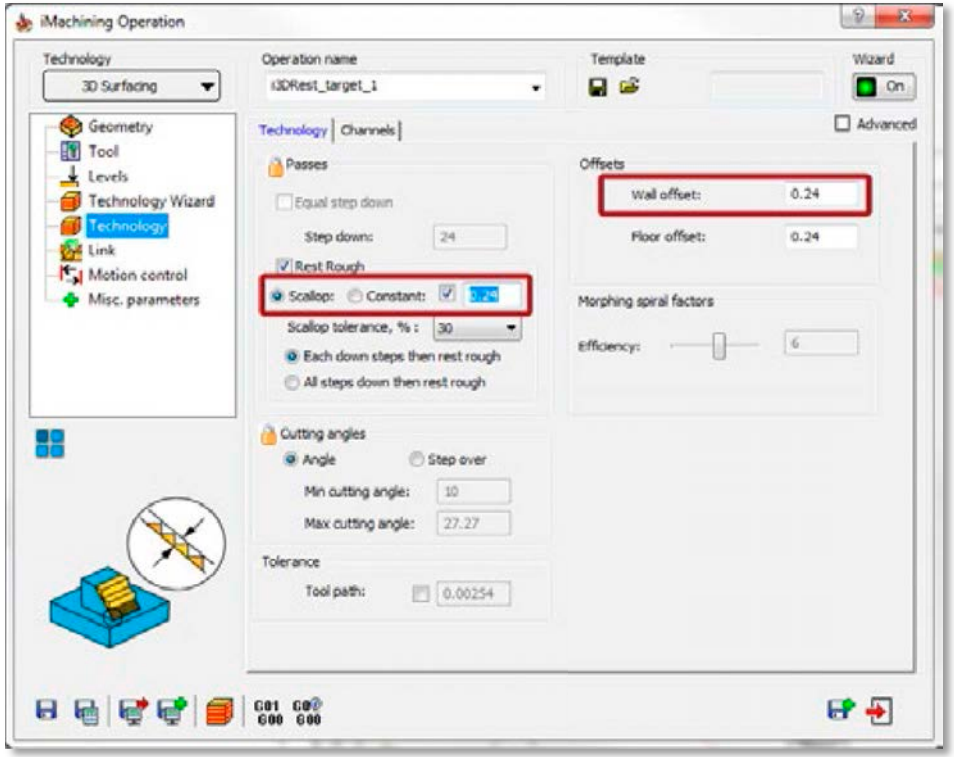

Default Scallop value: material ignored

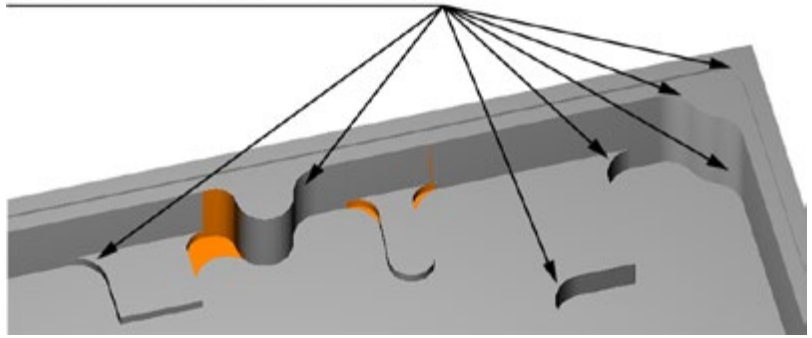

Decreased Scallop value: material machined

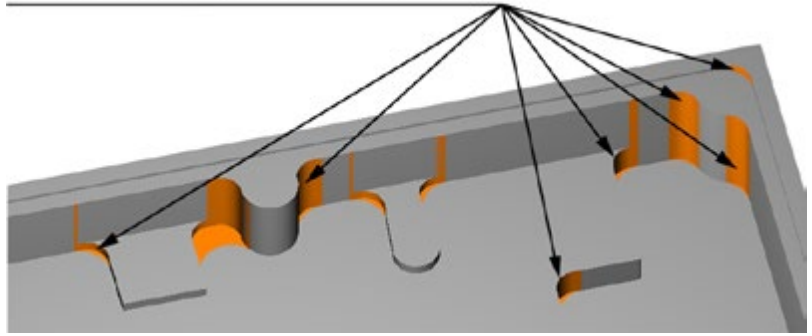

iMachining 3D - Automatic Target Protection

- **iMachining 2D** could gouge the Target when working with large tools in confined spaces

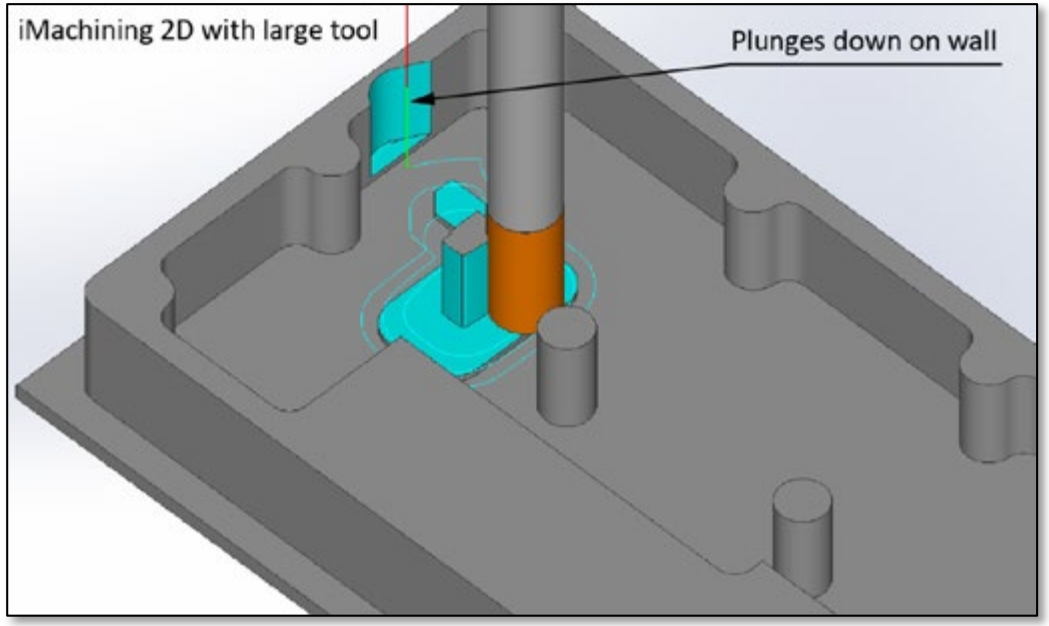

- **iMachining 3D**, on the other hand, provides automatic protection of the Target model

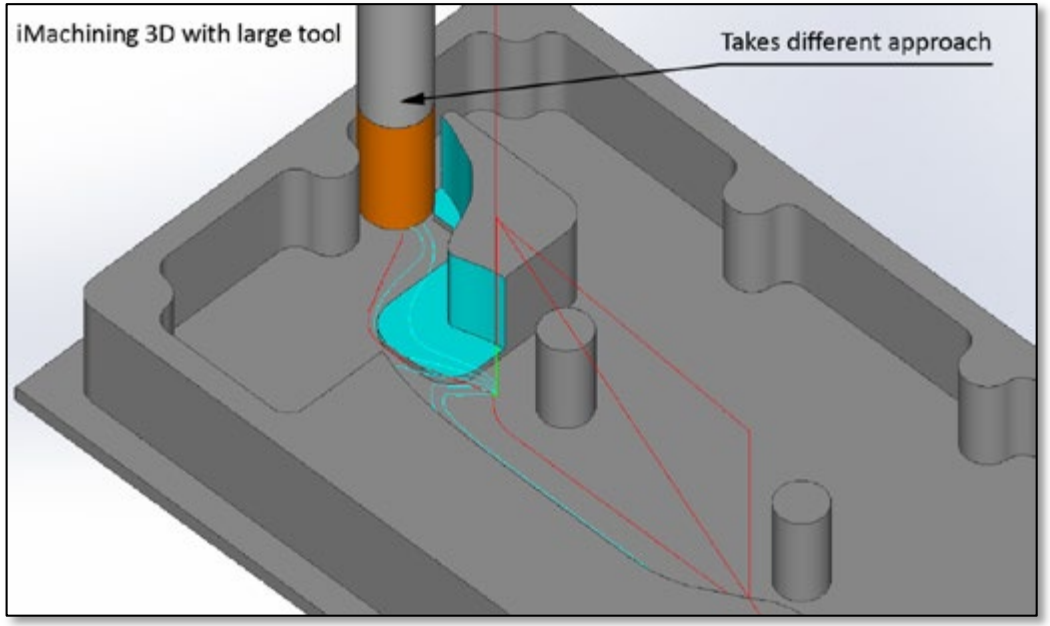

iMachining 3D - Holder Collision Protection

- **iMachining 3D** adjusts the tool path to avoid contact between the defined tool holder and the Updated Stock model, at every stage of the machining

- **Without holder consideration**, the extension of the tool from the holder would have to be long in order to machine deep pockets

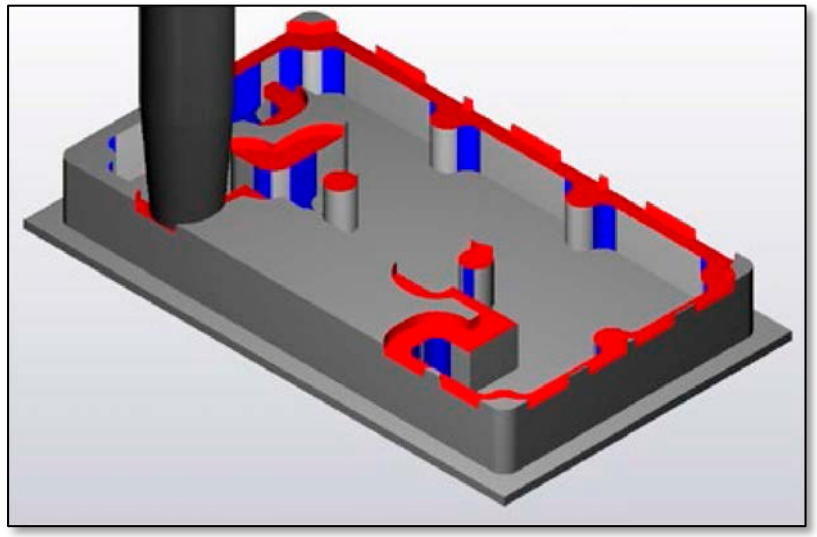

- **With holder consideration**, the extension of the tool from the holder can be short and strong, enabling the tool to run faster and more aggressive

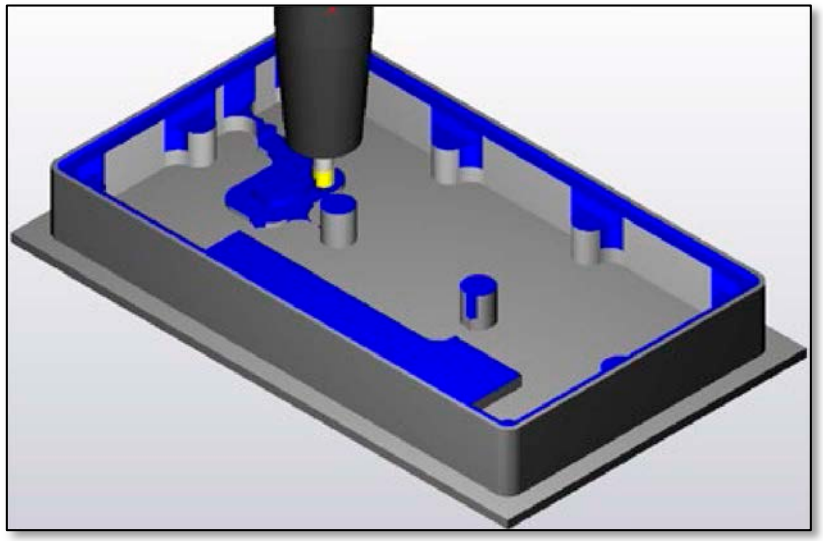

Finish Prismatic Parts with Pocket Recognition

- **Pocket recognition** automatically identifies all pockets (with different depths and at different levels), and processes them in a single operation, drastically reducing your programming time
- In most cases when finishing, the default operation settings can be used
  - For optimal results, simply select the **Final cut** and **Wall Finish** options on the Technology page

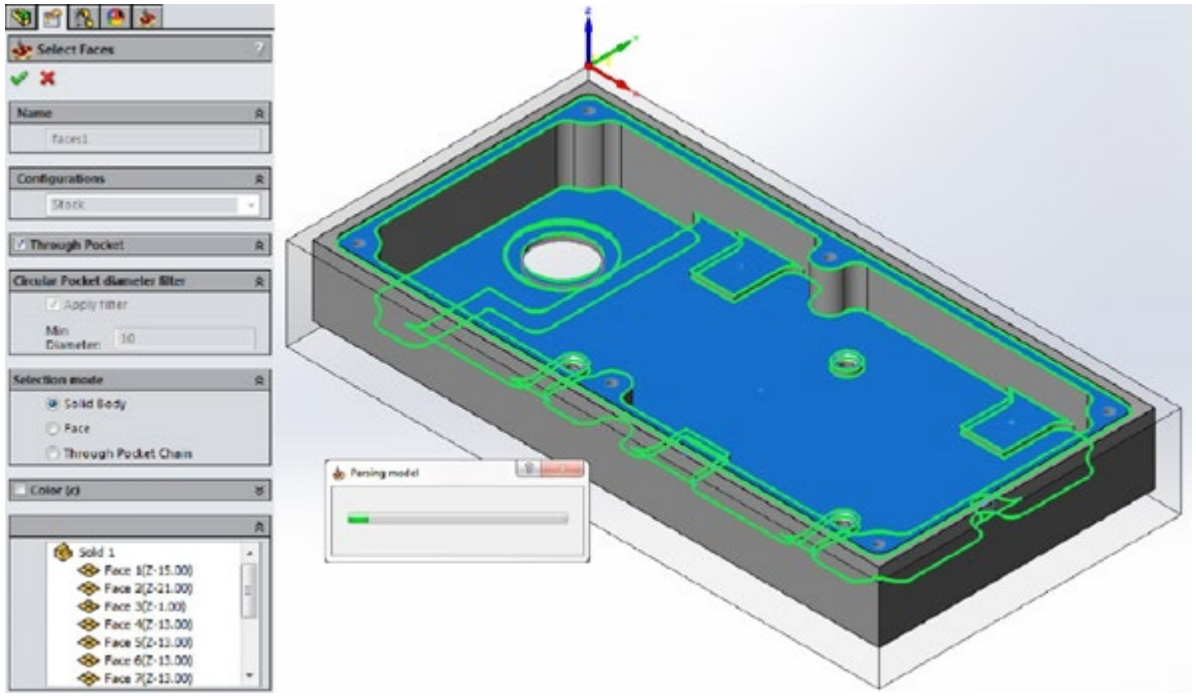

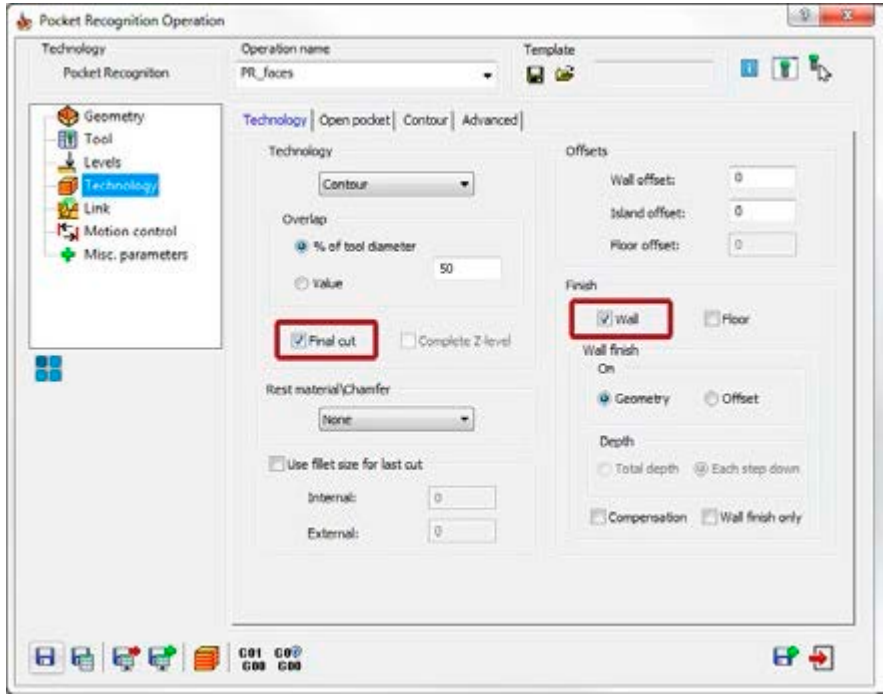

Finish Prismatic Parts with Pocket Recognition

- Pocket recognition provides optimal finishing of recognized pocket features in a single operation
- Finishing is performed using a pattern (contour shown)

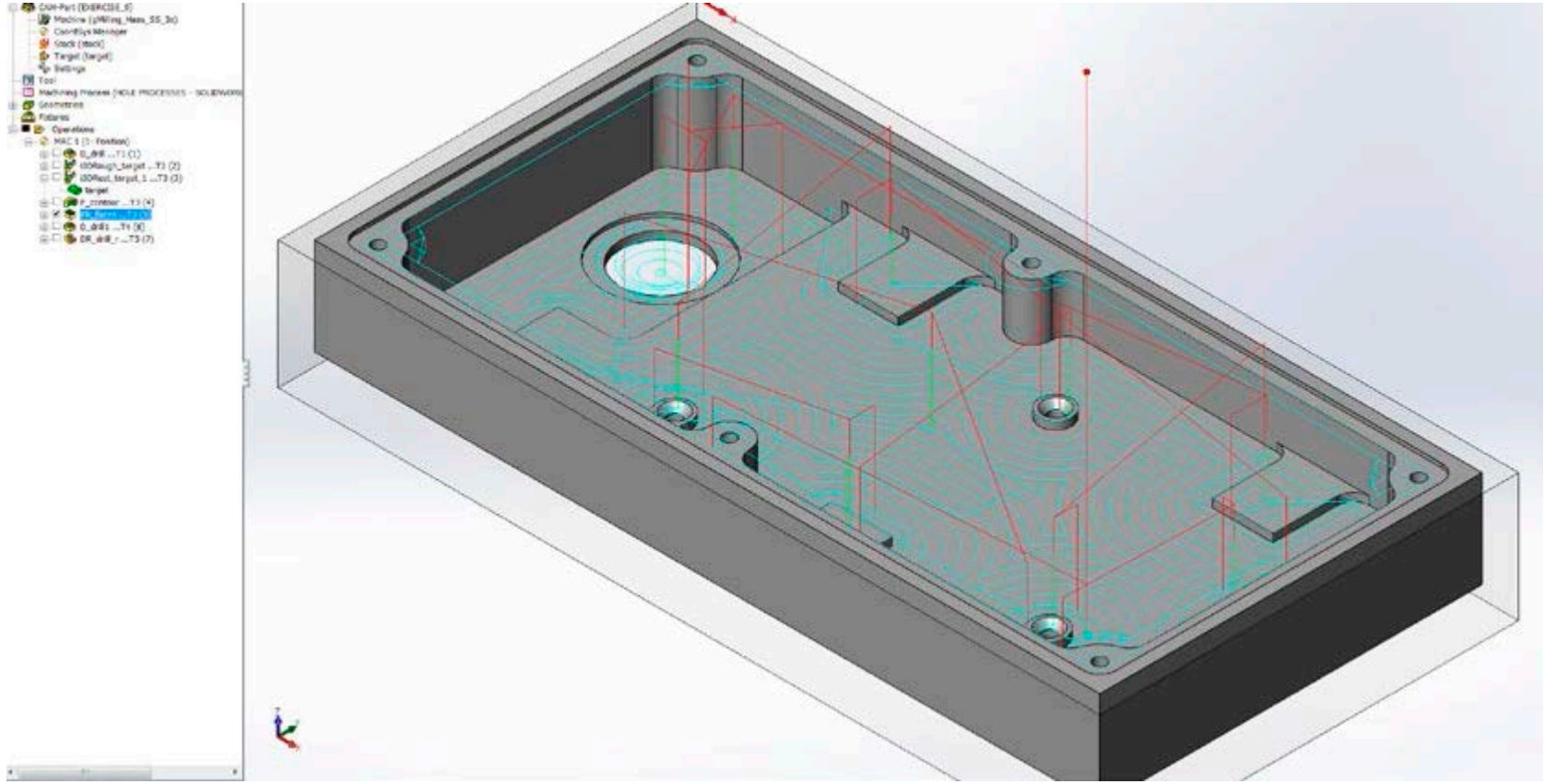

iMachining 3D for Prismatic Parts + Pocket Recognition

- Combine the **amazing power of iMachining3D** with **Pocket Recognition** to automate completely the **programming of 3D Prismatic parts**, while **saving 70% and more in machining time.**

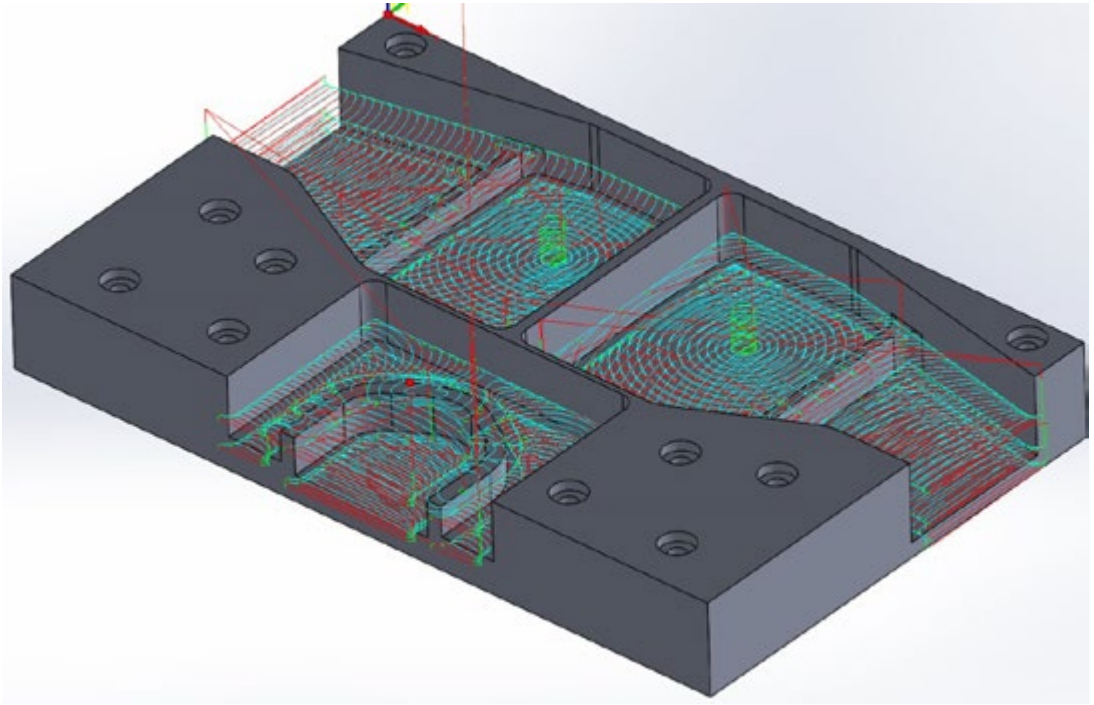

iMachining 3D for Roughing & Rest Rough

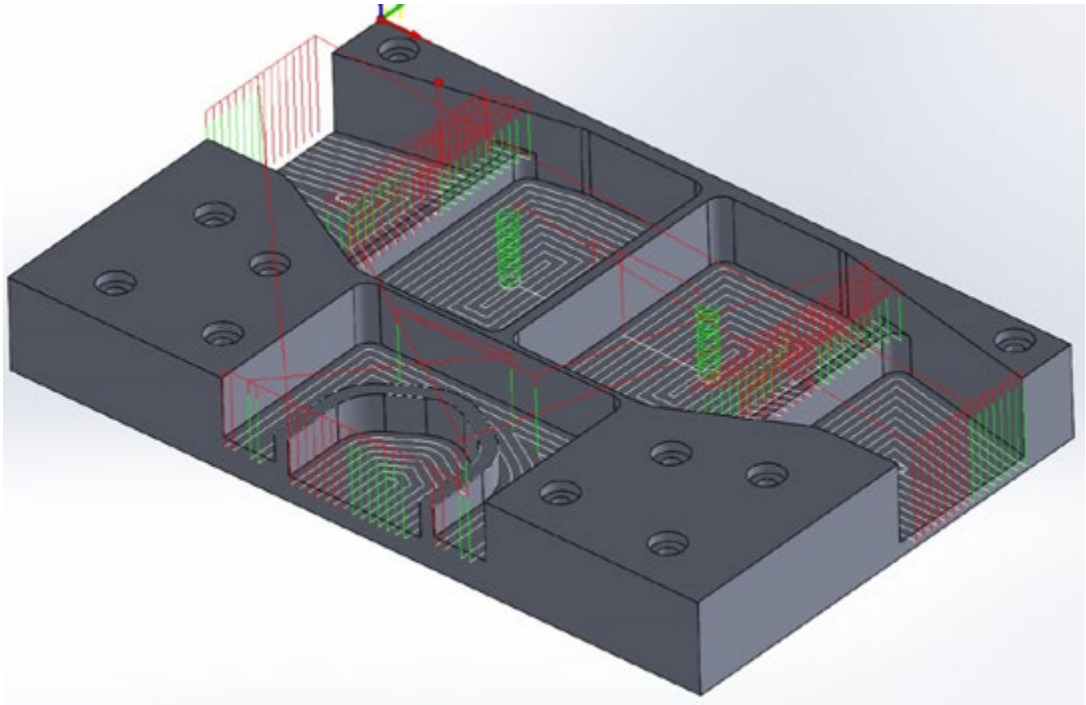

Pocket Recognition for Finish

iMachining 2D+3D savings in Aluminum

Customer: Heidkamp metalworking, Germany

- **Uses iMachining 2D + 3D modules**..
- The customer worked mainly with **aluminum**, from **several sides**, on various machine tools.

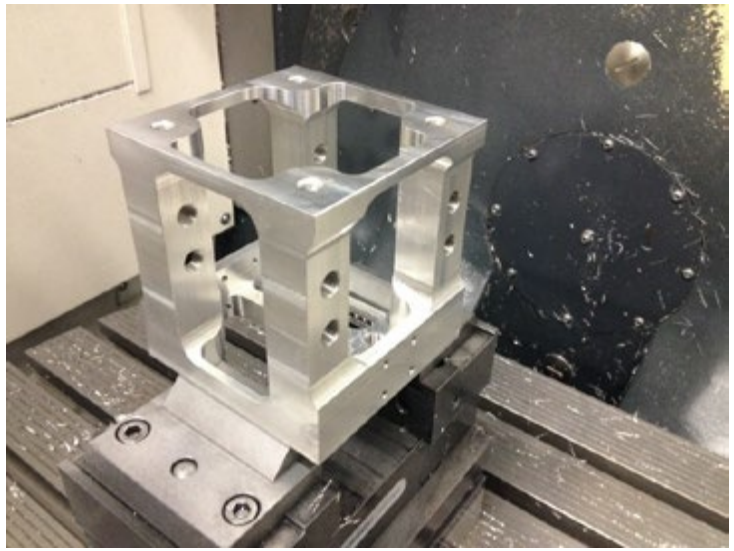

"It was just amazing - iMachining worked immediately - For all components, we now achieve savings of 65 to 75%."

Read Full Success Story

iMachining Successes
Benchmarks results and savings

iMachining 3D savings in Steel

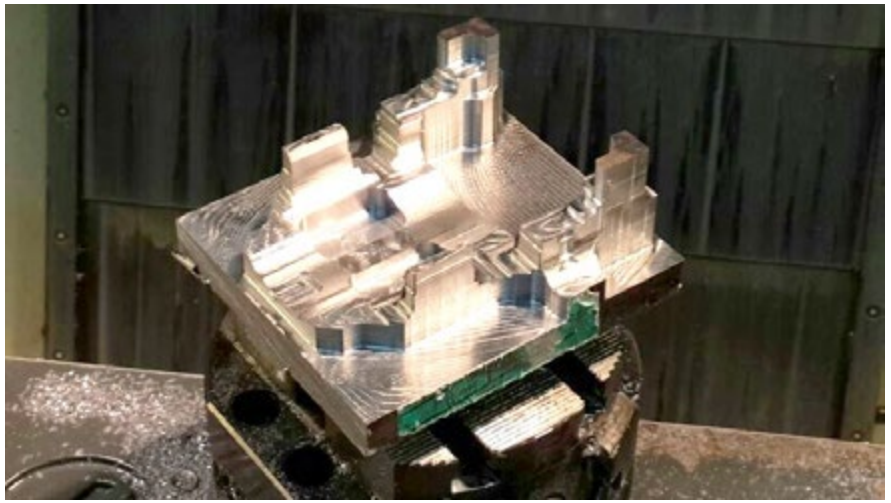

Customer: Haargaz Techno-Pach

Material: **AISI 1020 Steel**

Milling: Finish Diam 12 (ISCAR)
Cutting depth: 43 mm
iMachining level: 5

Customer previous time: **146 min**
iMachining time: **28 min**

Savings: 81%

Read Full Success Story

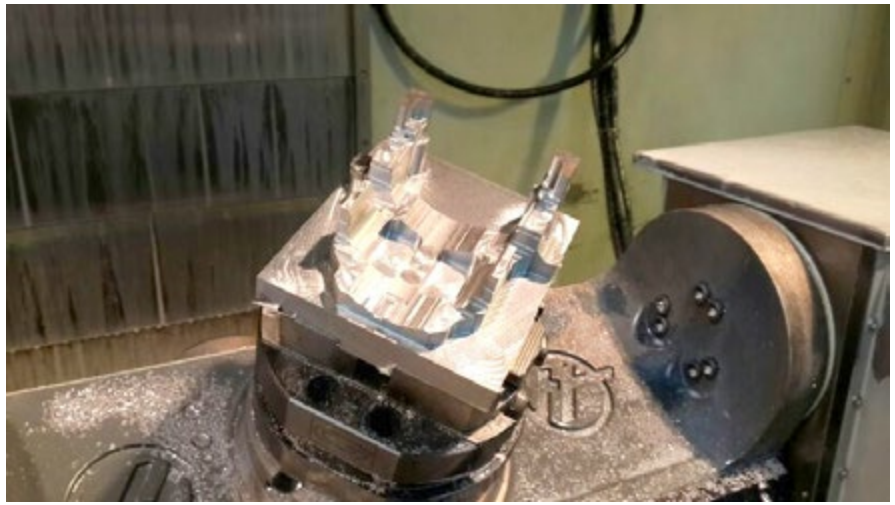

iMachining Successes
Benchmarks results and savings

iMachining in Mill-Turn Cutting video

iMachining3D + Sim5X Milling Cutting Video

Reduced CNC machine wear with iMachining

- The **iMachining Tool p**ath, combined with optimum cutting conditions provided by the Technology Wizard, ensure **constant load on the tool** in any situation.

- iMachining makes sure that the constant load on the tool will be such that the **spindle load w**ill range from **4% to 17%** of the maximum possible spindle power load (depending on the LEVEL of the slider in iMachining Wizard)

- **Hermle** company concluded that with iMachining, the forces acting on the their Spindle are the smallest of all CAM systems using High Speed Machining.

- **Makino** company also tested iMachining on its machines (MAKINO A55 & A61) and reached similar conclusions

Technology Partners – Cutting tool, CNC machine tool & Controller manufacturers

Hoffmann Group®

MAPAL

HERMLE besser fräsen

HURCO® mind over metal℠

GÜHRING

Member IMC Group ISCAR

Mazak

OKUMA

OKK OKK CORPORATION

HAAS

GROB

müga

WIDIA™

SIEMENS

ALZMETALL we drive productivity

SANDVIK

HEIDENHAIN

DMG MORI SEIKI

SolidCAM iMachining: Gives you the biggest competitive edge!!

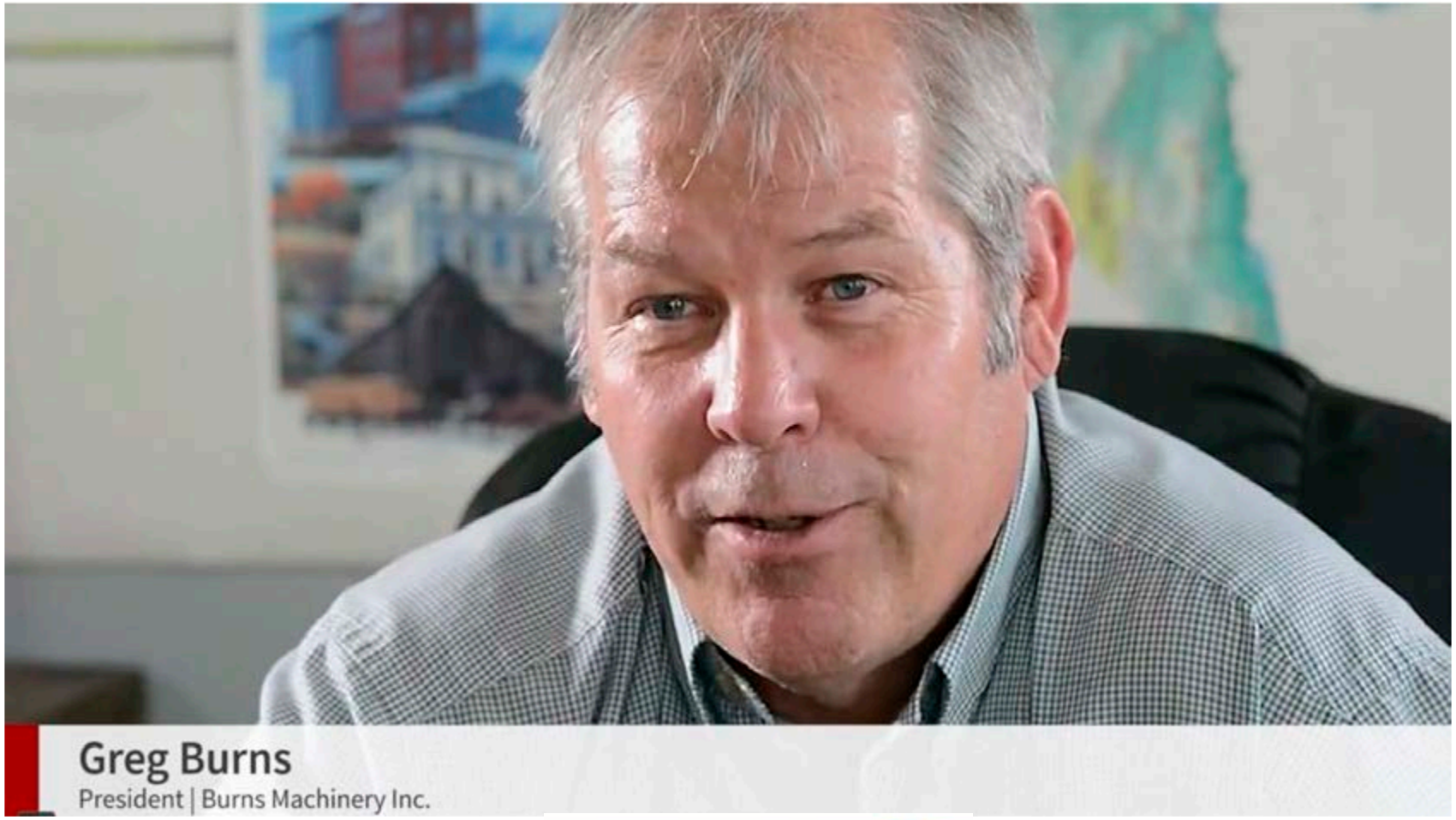

iMachining Successes
Benchmarks results and savings