Task-based CAD/CAM Training

VDW Nachwuchsstiftung

Design with SolidWorks
Manufacture with SolidCAM

Part 1: CAD/CAM

CAD/CAM Basics

Nachwuchsstiftung

Design with SolidWorks
Manufacture with SolidCAM

VDW-Nachwuchsstiftung GmbH
Gildemeisterstraße 60, D-33689 Bielefeld, Tel.: +49 (0) 52 05 / 74 - 25 52,
Fax: +49 (0) 52 05 / 74 - 25 54, kontakt@vdw-nachwuchsstiftung.de
www.vdw-nachwuchsstiftung.de

Disclaimer

The information in this document was compiled to the best of our knowledge. We, however, assume no liability for any mistakes or damages that may be caused by using this book.

ISBN 978-3-942817-28-8
08/2012_V1.0

Most up-to-date knowledge for vocational education

Dear students,

In recent years, technological advancements in the machine tool industry has grown exponentially. This acceleration of advancements is a challenge for vocational education. The VDW-Nachwuchsstiftung (foundation for secondary education) aims to strengthen and improve the transfer of knowledge between industry and vocational education.

This task-based educational training manual was created by the collaboration of vocational educators and industry trained personnel.

Part 1 of this manual is intended for students and is designed to introduce the techniques used in CAD/CAM. It is important that the students exercise self-organization throughout the learning process. Part 2 is intended for the instructor and consists of additional information on the technical and methodical aspects of CAD/CAM, which is also designed to support personalized teaching styles.

We would like the say “Thank You” to all our partners who supported us during the creation of this document, especially SolidCAM.

We would like to wish you fun and success in learning.

VDW-Nachwuchsstiftung
Bielefeld/Frankfurt

SolidCAM

Introduction

Students,

This training manual was developed for you as both an informational and instructional booklet. It is provided to teach you the basics of CAD/CAM technology. The structure of this manual not only conforms to the teaching methods and curriculum guidelines required by schools and universities, but also the methodologies used by design and manufacturing professionals alike. For each task-based lesson, the final process is shown using part and assembly drawings. A general explanation accompanies each task to be performed, which should not be used as a direct solution. The process of determining an answer to each problem should be solved individually. In the same way, the content in this manual was created to help you develop the skills necessary to apply best practices related to CAD/CAM business operations.

Like in today's manufacturing departments, you will have to produce the components and final assembled part for an adjustable workpiece stop (vise stop). Each lesson is comprised of the following tasks:

- Analysis of the task in relation to the final goal
- Planning of a workflow
- Implementation of the workflow in the design, manufacturing and documentation
- Presentation of the results followed by discussion
- Reflection of the procedures and the end result

A note about the structure of this book

This book is made up of two main sections: CAD and CAM. Although these two processes can be carried out separately from one another, it is recommended to complete the lessons within the two sections in sequential order to familiarize you with the design and manufacturing process as a whole.

The CAD section is made up of 6 lessons (numbered 1 – 6) and the CAM section is made up of 3 lessons (numbered 1 – 3). Each specific objective is then arranged into chapters.

In the first section, the workpiece stop is designed with SolidWorks. In the second section, SolidCAM is used to define the machining of the components. Due to the complexity of the project, it is broken down into the two sections with increasingly challenging lessons.

For each lesson, an example design is provided and contains all the necessary information in order to complete the task. The examples serve as a guide to help the students actively develop an effective workflow when using SolidWorks and SolidCAM. The last chapter in the section on CAM is intended for students to apply the procedures that were learned in each of the preceding lessons.

All the templates, sketches and worksheets used in this book can be downloaded from the Knowledge Base of the VDW-Nachwuchsstiftung (www.vdw-nws-online.de) in A3 or A4 size. All training material was created using SolidWorks 2014 and SolidCAM 2013. The SolidWorks Student Edition Software can be downloaded from the SolidWorks website. The information required to download the software can be obtained from the CAD/CAM instructor. A demo version of SolidCAM may also be downloaded from www.solidcam.com.

We welcome any suggestions or contributions to improve this training manual.

We would like to again wish you fun and success in learning.

VDW-Nachwuchsstiftung Bielefeld / Frankfurt

B-SKS-33689-1000
Reference no.: Student booklet

Knowledge Base
www.vdw-nws-online.de

Legend

Programming procedure (only for Lesson 1)

Task / Topic

Help, examples, procedures

Exercise / Example

Solution for the exercise

Tips to facilitate work

Recommendations for the prevention of errors

Reference to other relevant documents

Reference in the Knowledge Base on the Internet. Here you will find interesting videos, drawings, exercises, examples, and information on the subject: **www.vdw-nws-online.de**

VDW Nachwuchsstiftung

CAD Contents

CAM Contents

Overview:
Design and Manufacturing of the Workpiece Stop

Notes

B-SKS-33689-1000

Video construction and function of the workpiece stop

Completed Project:
Adjustable Workpiece Stop

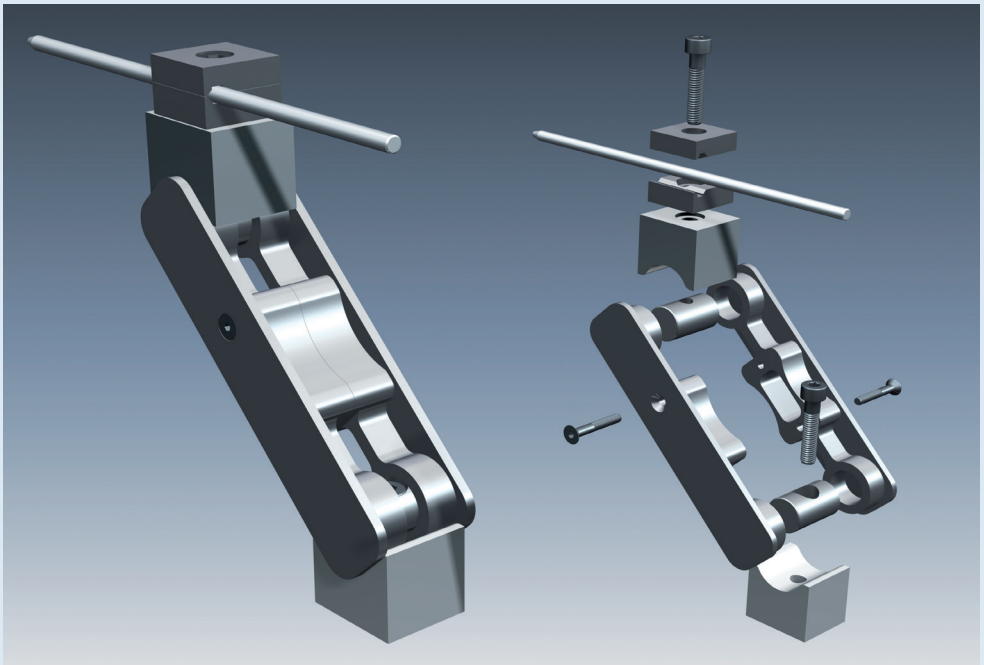

Lessons Overview

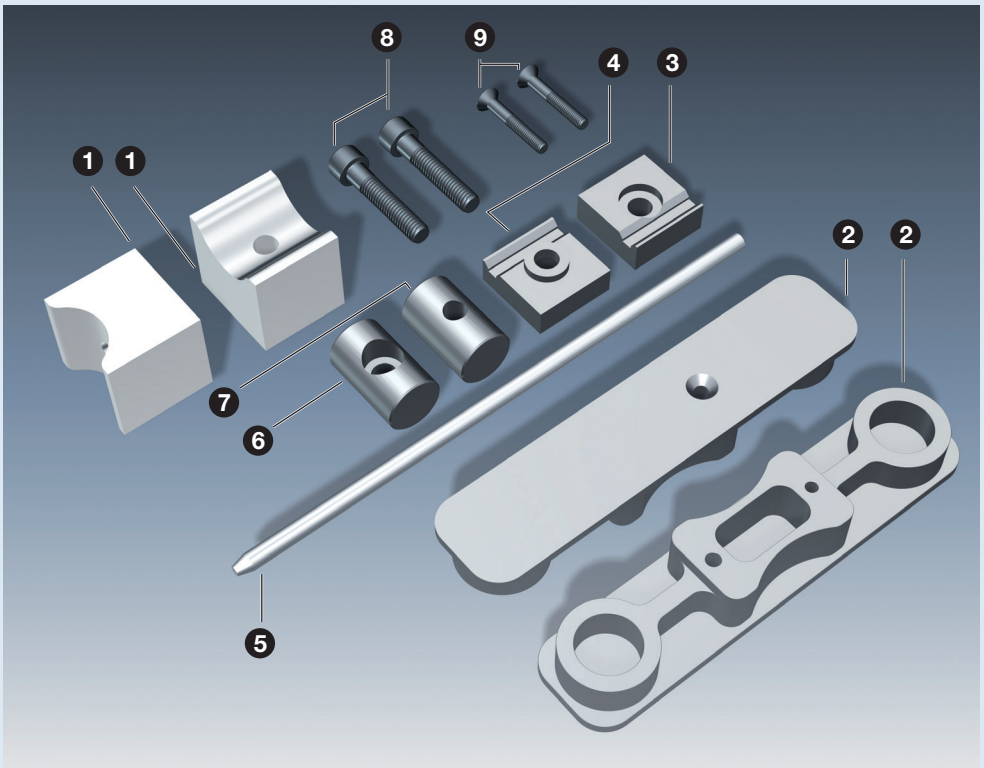

No.	Quantity	Name	Lessons	
			CAD	CAM
1	2	Foot	1 + 6	1
2	2	Side Part	3 + 6	3
3	1	Needle Holder Base	2 + 6	2
4	1	Needle Holder Top	2 + 6	2
5	1	Stop Needle	5 + 6	
6	1	Stud with Counterbore	4 + 6	
7	1	Stud with Thread	4 + 6	
8	2	Cylinder Head Screw ISO 4762 - M8 x 55	6	
9	2	Countersunk Screw ISO 10642 - M5 x 30	6	

Notes

All hand sketches and worksheets can be downloaded in a usable size from the Knowlege Base of the VDW-Nachwuchsstiftung (www.vdw-nws-online.de).

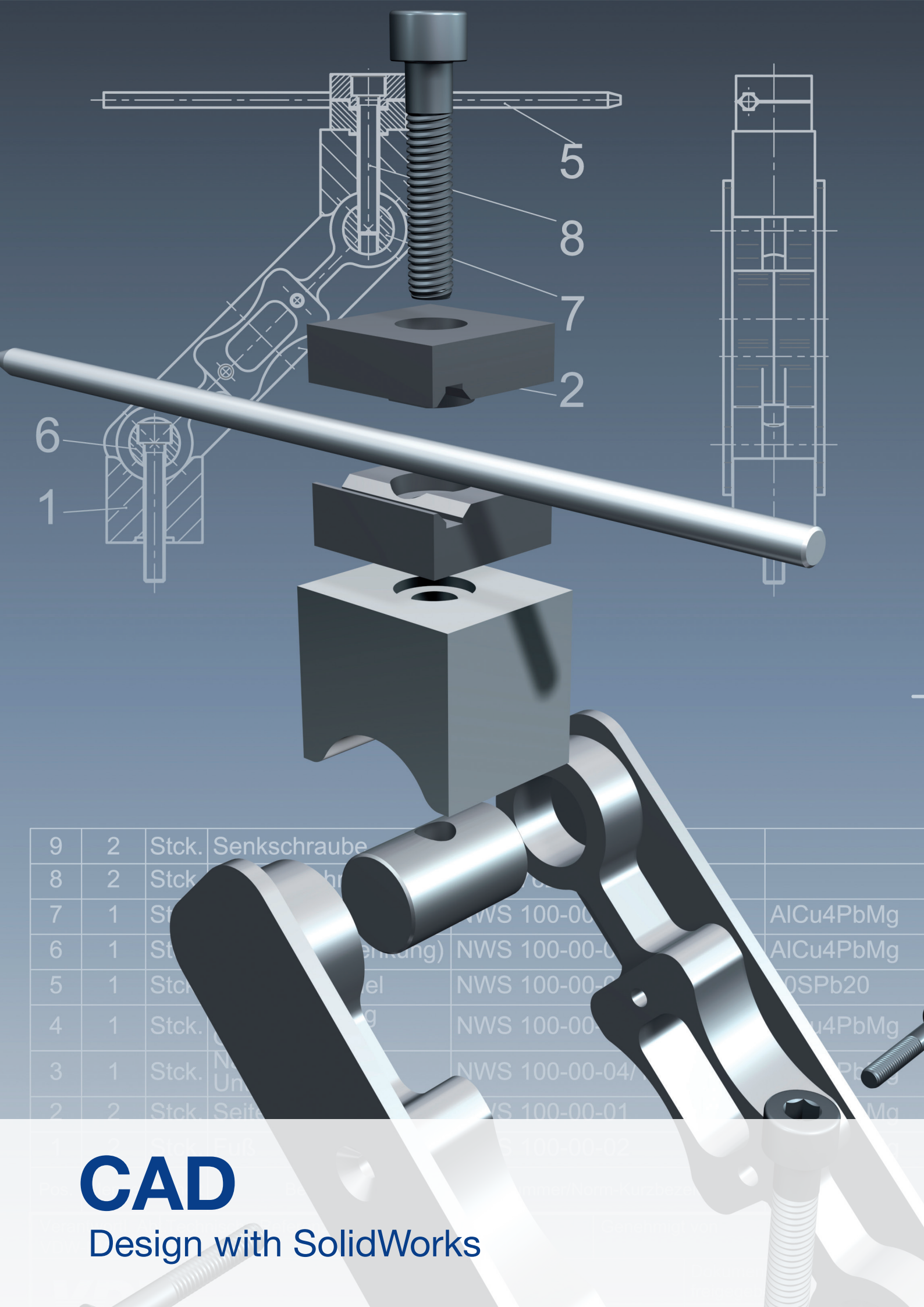

CAD

Design with SolidWorks

Notes

CAD Scenario

In your factory, the Assembly "Adjustable Workpiece Stop" needs to be produced in large numbers. It is your task to design the workpiece stop according to the provided hand sketches as well as prepare all the necessary documents such as component drawings, assembly drawings and bill of materials required for manufacturing. SolidWorks will be used throughout the design process.

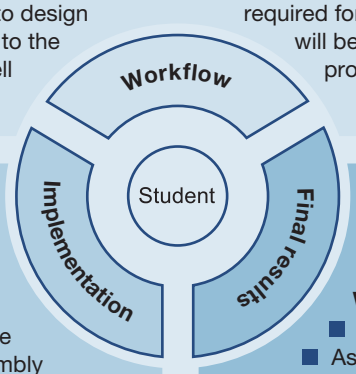

Procedures

1. Problem Analysis

- Understand and describe the function of the Assembly
- Discuss the problems and solutions
- Determine the objectives

2. Planning the solution

- Provide information
- Work specifications (designation of duties, regulations, working hours, responsibilities)
- Plan the sequence of Lessons

3. Prepare and present solutions

- Obtain the necessary information
  - What sketch entities are needed to create the geometries?
  - What features are needed to produce the solid model?
  - How are drawings produced?
  - How are tolerances set?
  - How are variations designed?
  - How are assemblies composed?
  - How are part lists generated?
- Select sketch entities and features
- Design the parts
- Specify the tolerances
- Create the drawings
- Assemble the components
- Generate the parts list
- Present the solutions

4. Review of the solutions

- Evaluate designed parts and drawings
- Analyze and evaluate the Assembly
- Analyze and evaluate the procedures
- Discuss the problems and solutions

5. Reflection of the procedures

- Assess the learning process
- Assess procedures and methodologies

Design Process

Work on the PC

- Design the parts
- Assemble the components
- Prepare the drawings and bill of materials

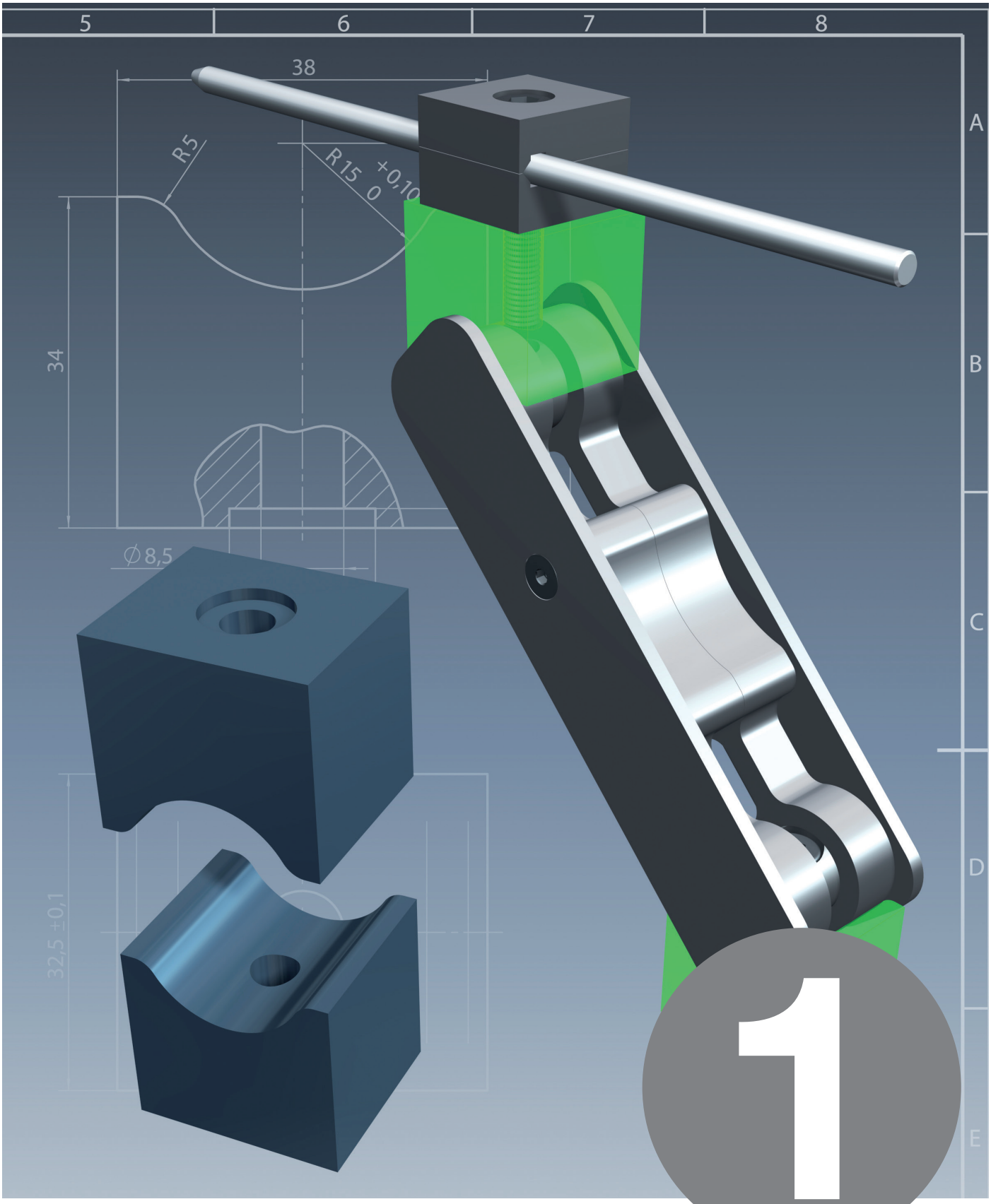

Lesson

Designing the Foot

Nachwuchsförderung | Erst. Pos. 1 | Ausgabe | Datum

Lesson 1

Designing the Foot

Notes

Create a 3D Part drawing of the component *Foot* and then generate a 2D engineering drawing for production. The measurements and features may be taken from the hand sketch on the next page.

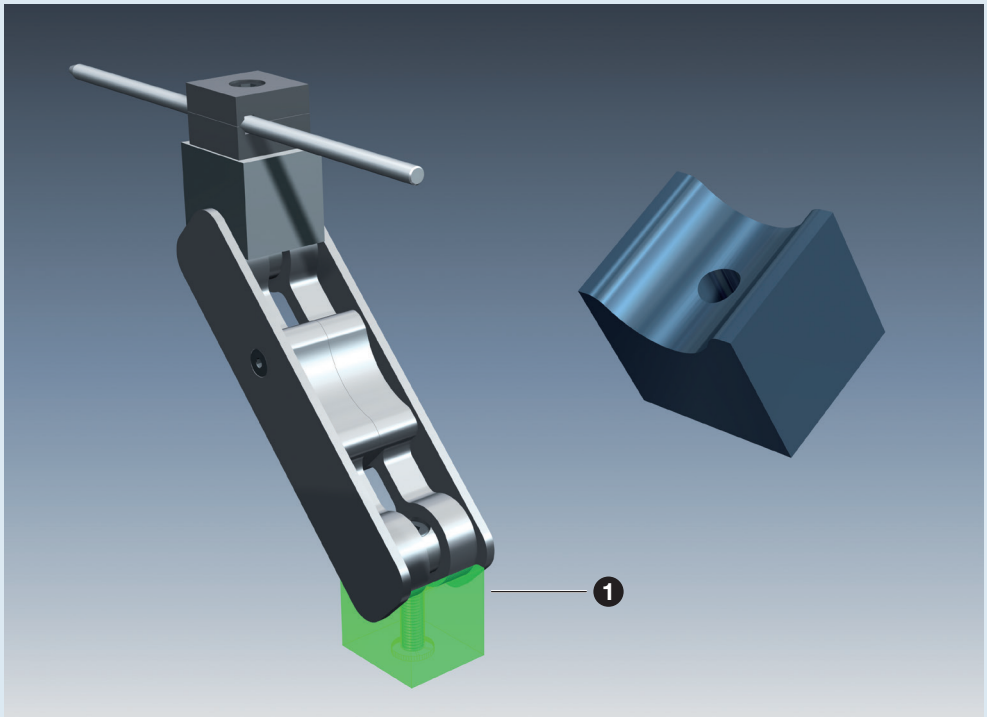

Introduction

Workflow Approach

1. Analyze the above task together with the sketch, and then determine the objective and how to achieve it.

2. Plan a procedure for implementation of the Lesson.

3. Create the 3D solid model, generate a manufacturing drawing and then save the results of your work.

4. Evaluate your results and reflect on the procedure.

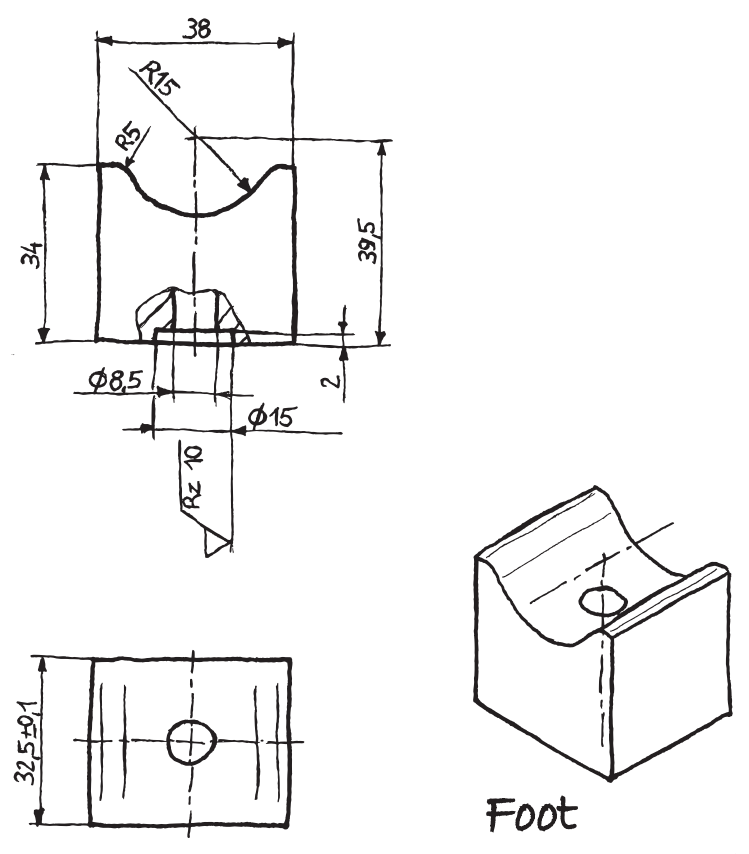

On the following pages, the example part *Hinge Block* is used to illustrate the steps that are necessary to complete this task.

- The design task for the component *Foot* can be performed effectively by first completing this example.

Notes

Chapter 1

Creating a 3D Solid Model

Notes

1 Creating a 3D Solid Model

As a general rule, the following six steps for creating a 3D solid model are similar for all parts to be produced.

1. Step:	■ Start a New SolidWorks Part Document and then immediately save the file with the component name. (e.g., Foot.SLDPRT)	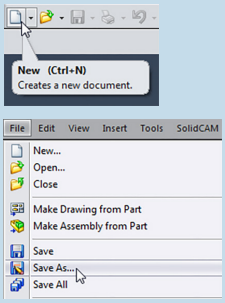
2. Step:	■ Create a new sketch. • Open the sketch • Draw the 2D geometry features with the sketching tools. In general, ensure that the sketches are always black in color (fully defined)	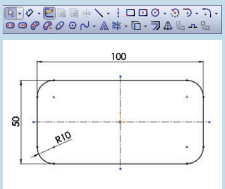
3. Step:	■ Extrude the geometry: • with Extruded Boss/Base • with Revolved Boss/Base (for Rotating Bodies)	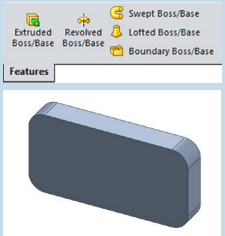
4. Step:	■ Using additional features, the final shape is created by either removing or adding material.	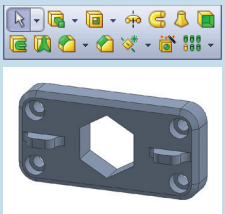
5. Step:	■ Save the SolidWorks Part.	
6. Step:	■ Generate a manufacturing drawing of the Part/Assembly, print it out and then save it.	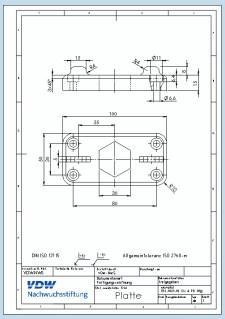

Example: Hinge Block

On the following pages, the example part *Hinge Block* is used to illustrate the steps that are necessary to complete this Lesson.

- When working through the example, pay attention to the important information in the *Notes* column.

An enlarged view of the hand sketch can be found in the Appendix as well as the Knowledge Base.

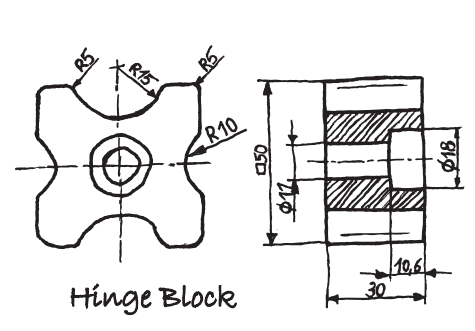

Notes

B-SKS-33689-1000

Hand sketch
Example: Hinge Block

1.1 SolidWorks User Interface

Open SolidWorks, start a New Part Document and then save the file with the component name. Familiarize yourself with the SolidWorks User Interface (shown on the next page).

1. Step
Start a New Part Document and then immediately save the file with the component name.

- Open SolidWorks.

The application window will appear.

- With the left mouse button (LM), click the *New* command in the Menu Bar to start a New SolidWorks Document.

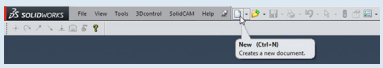

- Choose *Part, a 3D representation of a single design component*.

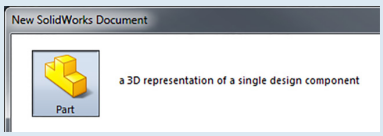

- Save the new part using the *Save As...* command and name it *Hinge Block*.

Notes

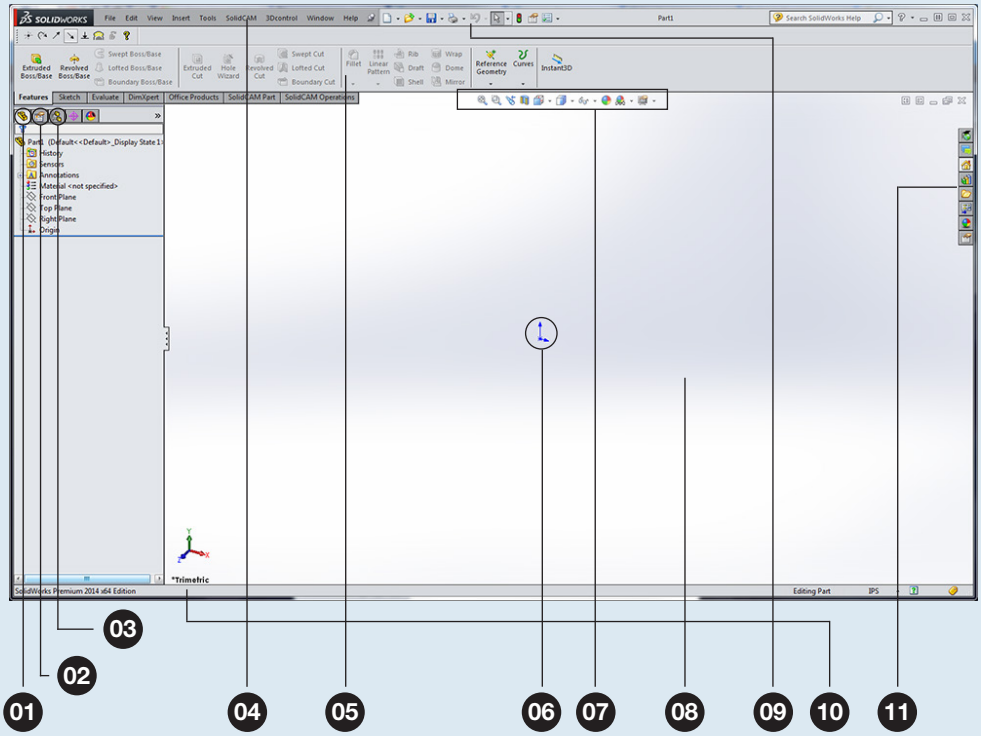

No.	Name
01	FeatureManager
02	PropertyManager
03	ConfigurationManager
04	Menu Bar
05	CommandManager
06	Origin
07	Heads-up View toolbar
08	Graphics Area
09	Standard toolbar
10	Status bar
11	Task Pane

T!P

Moving forward -*click*- means to press the left mouse button (LM). When use of the right mouse button (RM) is needed, it will be instructed specifically.

Exercise

- When working in SolidWorks, you will need to know the technical terms of the User Interface pictured on the left (No. 1-1).
- Complete the table below with the corresponding interface element names and explain their meaning by searching the SolidWorks Help.

No.	Interface Element	Meaning
01	FeatureManager	Provides an outline view of the active part, assembly, or drawing

Notes

Notes

1.2 Designing a Part

1.2.1 Creating the Solid Model

2. Step:
Create a new sketch.

Create the sketch, which is the basis for a solid model.

- In the FeatureManager design tree, click the *Front Plane* and open a new sketch from the appearing context toolbar.

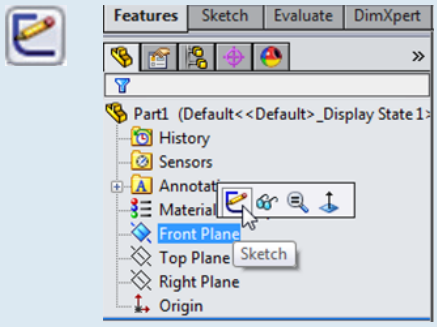

The geometry created in the Front Plane will be the front view of the drawing.
The CommandManager will be automatically displayed with the Sketch toolbar active.

- In the Sketch toolbar, choose *Center Rectangle* from the *Rectangle* flyout tool.

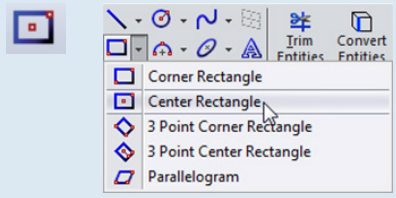

- From the Origin, sketch a rectangle of any size.
  Note the appearance of the cursor changes when snapping the Origin.

- To close the Rectangle PropertyManager, press the *Esc* key or click *OK*..

Esc

- In the Sketch toolbar, click the *Smart Dimension* tool.

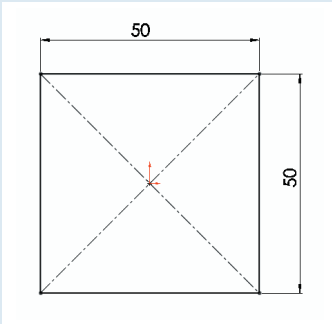

- Pick on the top edge of the rectangle on the Graphics Area, move the cursor upwards and then click to add the dimension.
- In the Modify dialog box, enter the width measurement of the Hinge Block.

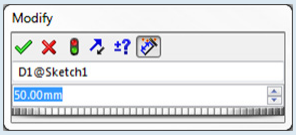

- Add the second dimension as shown in the illustration.

- Exit the sketch by clicking the icon shown on the right.

3. Step:
Extrude the geometry.

Create the base feature.

Extruded Boss/Base Feature

- In the CommandManager, click the *Features* toolbar and choose the *Extruded Boss/Base* tool.

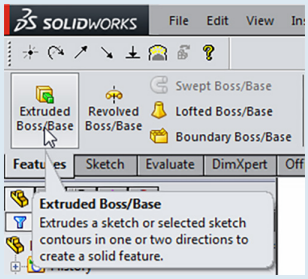

The Extruded Boss/Base feature adds material to a part.
A sketch is required in order to use this feature.

- Under Direction 1, choose *Blind* from the drop-down menu.

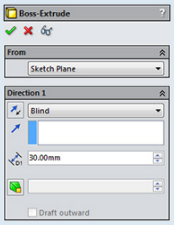

The Blind condition extends the feature from the sketch plane for a specified distance.

- In field D1, enter the depth measurement of the Hinge Block.

- Click *OK*.

The base feature (solid body) is created as the foundation of the part. During the course of this exercise, more features will be added to this solid body.

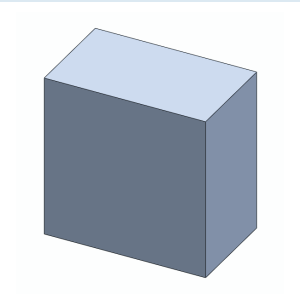

The feature name *Boss-Extrude1* appears in the FeatureManager.

- Click the feature name using a delayed double-click. This action enables you to enter a new name.

- Enter *Solid Body* for the new name.

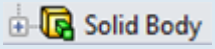

Notes

Notes

1.2.2 Views and Display Mode

With the Heads-up View toolbar, you can change the display mode of the model as well as adjust its orientation.

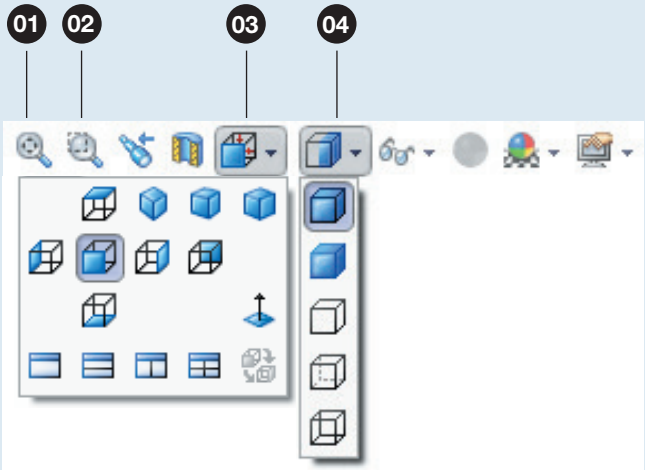

No.	Name	Description
01	Zoom to Fit	Zooms the model to fit the window.
02	Zoom to Area	Zooms to the area you select with a bounding box.
03	View Orientation	Changes the current view orientation or number of viewports.
04	Display Style	Changes the display style for the active view.

Pressing and holding the mouse wheel and then moving the mouse enables you to dynamically rotate the model in the Graphics Area.

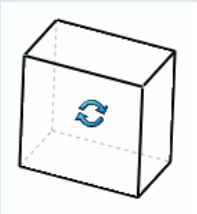

Pressing and holding the mouse wheel along with the *Ctrl* key enables you to pan (or move) the model in the Graphics Area.

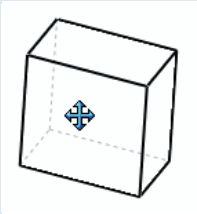

Scrolling with the mouse wheel enables you to zoom in or out.

1.2.3 Editing Features

You have created your first feature. Often times, you will have to modify an existing feature.
SolidWorks makes it easy for you to edit features and sketches or even delete them if necessary.

- Practice some modifications.

Editing the Definition of a Feature

- In the FeatureManager design tree, click the feature *Solid Body* and choose *Edit Feature* from the appearing context toolbar.

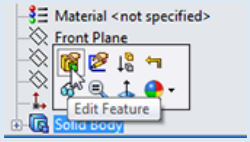

The PropertyManager opens and enables you to make feature modifications (e.g., Direction, Depth or the End Condition).

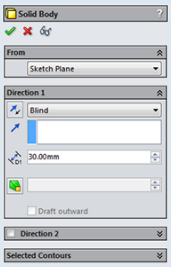

- Clicking *OK* will save your changes and exit the PropertyManager.

Editing a Sketch

- In the FeatureManager design tree, click the + symbol to expand the contents of the Solid Body feature. Click the associated item *Sketch1*.

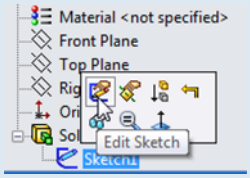

- Click *Edit Sketch* in the appearing context toolbar. The sketch that was used to create the Solid Body feature opens for editing.

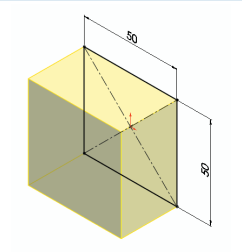

Notes

Notes

- In the Heads-Up View toolbar, click the *View Orientation* flyout and choose *Normal To*. This will align the view with the sketch plane.

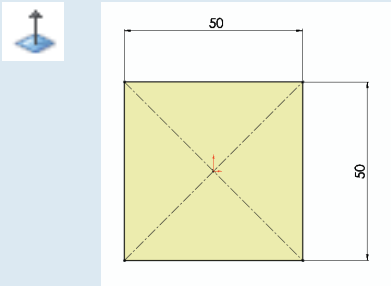

- To modify a dimension, double-click it in the Graphics Area.

The Modify dialog box appears and enables you to change the measurement value.

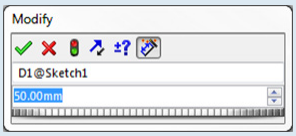

- Clicking *OK* will save the modified value and exit the dialog.

- To delete dimensions and sketch entities, pick on them in the Graphics Area and then press the *Del* key.

Del

Deleting Features and Sketches

- Features can be deleted in the FeatureManager design tree by RM clicking the feature and choosing the *Delete* command from the shortcut menu.

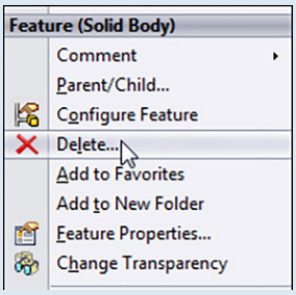

The Confirm Delete dialog box appears.

- Select the *Delete absorbed features* option to also delete the associated sketch.

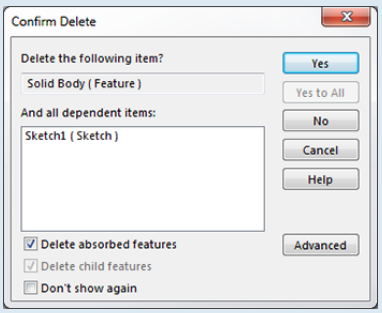

If the check box is not selected, the sketch will be kept.

A sketch can be deleted in the same way. If a feature is dependent on the sketch however, it cannot be deleted

- If features and sketches are deleted in error, the action can be reversed by clicking the *Undo* command.

1.2.4 Removing Material

4. Step:
Using additional features, the final shape is created by either removing or adding material.

Create the final shape of the t by removing material.

Extruded Cut Feature

- Open a new sketch on the Front Plane and then choose *Normal To* from the Heads-Up View toolbar.

The view is rotated and zoomed so that its orientation is Normal To the sketch plane.

T!P

In the SolidWorks Menu Bar, click *Options*. When the System Options dialog box appears, click *Sketch* in the tree on the left and select the option *Auto-rotate view normal to sketch plane on sketch creation*. Newly created sketches will now be rotated Normal To the sketch plane automatically.

- Sketch a horizontal and vertical center line, and then sketch two circles, Ø30 and Ø20.

- After selecting the *Centerline* tool, align the cursor with the Origin.

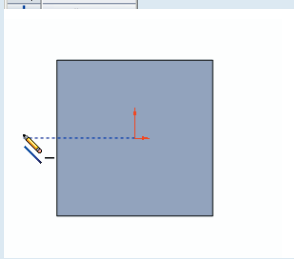

- When the dotted line appears, click to horizontally set the starting point of the center line.

Next set the end point of the center line. The cursor will snap into place when the center line geometry is perfectly horizontal.

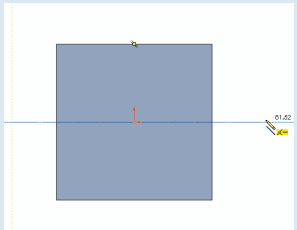

Notes

Notes

- When sketching the circles, ensure that the circle centers are positioned on the center lines.

- Using the Dimensions tools, position the circles as shown.

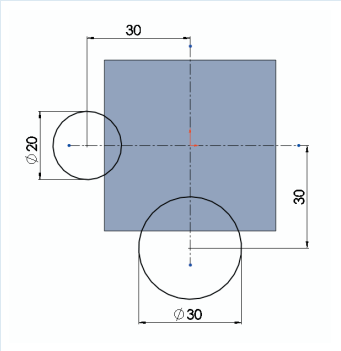

- To mirror the circle entities, select one circle and the center line by which you want to mirror it while pressing the *Ctrl* key. Then click the *Mirror Entities* command in the Sketch toolbar.

Ctrl

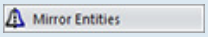

The entities are mirrored.

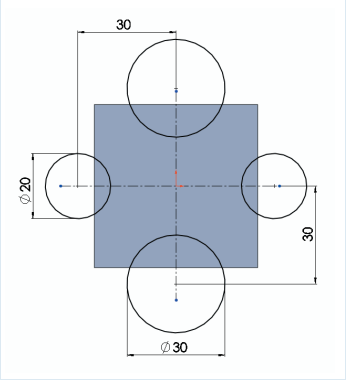

T!P A sketch shown in black indicates that it is fully defined. Sketches should always be fully defined.

- In the CommandManager, click the Features toolbar and select *Extruded Cut*.

The Extruded Cut feature removes material from the solid body. Like the Extruded Boss/Base feature, it also requires a sketch.

- In the Heads-Up View toolbar, choose the *Isometric* view to better orient the model.

- Under Direction 1, choose the *Through All* condition. If necessary, select the *Reverse Direction* option.

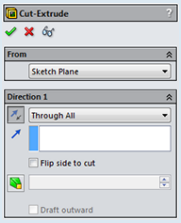

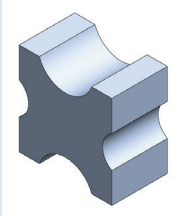

- Click *OK*.

Fillet Feature

- In the Features toolbar, choose the *Fillet* tool.

The Fillet feature creates a rounded internal or external face along one or more edges.

- Pick on the 12 edges to be filleted and enter a Radius value of 5.00mm in the Fillet PropertyManager.
  To show the changes dynamically on the model, activate the *Full preview* option.

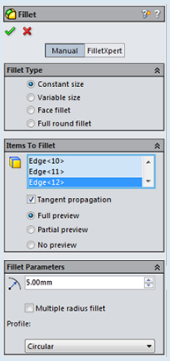

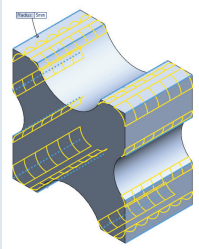

If you pick on an edge a second time, it will be deselected and removed from the Items To Fillet.

- Click *OK*.

Notes

Notes

1.3 The Hole Wizard

- To create the counterbore, first orient the model so that you can work on the front face.

- Pick on the front surface in the Graphics Area. When the context toolbar appears, click *Normal To*.

- Choose *Hole Wizard* from the Features toolbar. For the Hole Type, select *Counterbore*. In the Standard drop-down menu, select DIN and then select *Hex Socket Head Cap - EN ISO 4762* for the Type. In the Hole Specifications area, click the *Show custom sizing* check box. Enter the dimensions according to the Hinge Block hand sketch.

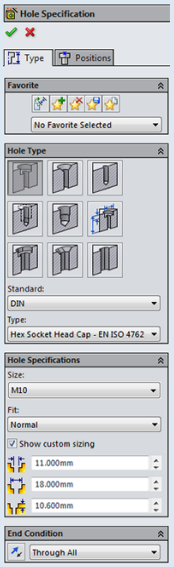

- Switch to the *Positions* tab in the PropertyManager. The Sketch *Point* command is automatically activated. Pick on the Origin with the cursor to create the hole. Click *OK* to confirm the hole creation and exit the Hole Wizard dialog box.

The specified hole is created.

1.3.1 Adding Relations

After you define the hole properties, the position of the hole must be placed on the Origin.
If you have placed the hole in a location on the front surface other than the Origin, a geometric relation can be used to fix the positioning of the hole to the Origin.

When a sketch entity is fully defined, it is shown in black. Blue sketch entities indicate that they are under defined. Under defined sketch entities can be moved around in the Graphics Area by clicking and dragging them with the mouse.
Relations can be used to fully define an under defined sketch.
You can create geometric relations between sketch entities, or between sketch entities and planes, axes, edges, or vertices. Relations between sketch entities and model geometry, in either 2D or 3D sketches, are an important means of building in design intent. Relations (e.g., Horizontal, Vertical, Tangent, Symmetric) can be used to produce a fully defined sketch with minimal dimensions.
For the Extruded Cut feature, the Sketch Relation *Coincident* was used to determine the center point positions of the circles. The relation was added automatically when snapping the circles to the center lines.
A relation can be added manually in the instance you add a sketch entity without snapping the cursor.

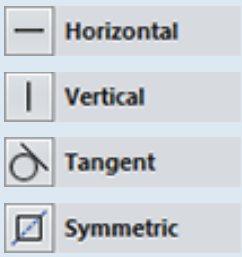

- To add the relation manually, select the Origin and the center point of the hole while pressing and holding down the *Ctrl* key.

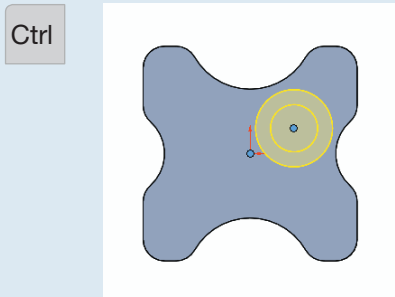

The selected entities are highlighted in blue.

Under the Add Relations area in the PropertyManager, the available relations for the selected entities will be shown.

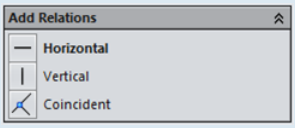

- Use the Sketch Relation *Coincident* in order to fix the center point of the hole to the Origin.

Notes

Notes

- Click the *OK* button to confirm the added relation. Click *OK* again to exit the Hole Wizard dialog box.

- In the Heads-Up View toolbar, choose the *Isometric* view to better orient the model.

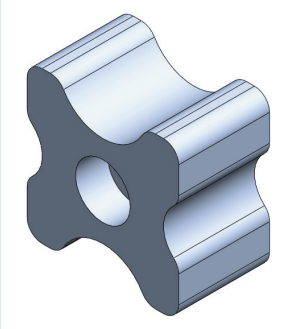

The design task of the example part *Hinge Block* is now completed.

1.4 Saving the Finished Part

5. Step:
Save the body.

Save the finished part. Note the different file extensions that are used and can be interpreted by SolidWorks.

- Click the *Save* command in order to save the current state of your work.

The proper saving of files is just as important as the proper building of the parts/assemblies.

It is recommended to always plan and think about the organization of you data ahead of time.

A single design component in SolidWorks uses the *.SLDPRT file extension.

VDW Nachwuchsstiftung

Design Task: Foot

- Now create the component *Foot*, shown on the right.

The steps that are necessary to complete this task were learned during the creation of the Hinge Block.

An enlarged view of the hand sketch can be found in the Appendix as well as the Knowledge Base.

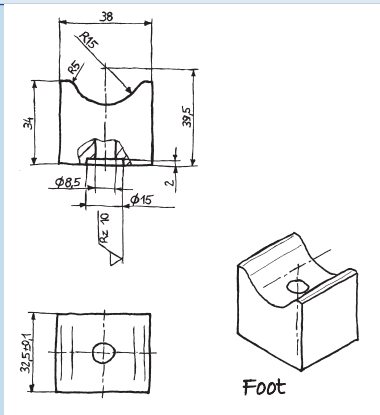

Notes

B-SKS-33689-1000

Hand sketch
Design Task: Foot

Chapter 2

Creating 2D Engineering Drawings

Notes

Step 6:
Make a drawing from part/assembly, print the document and save the file.

Create a standardized manufacturing drawing of the Hinge Block and print out the document.

You can make a 2D drawing from a 3D model document (part or assembly). Parts, assemblies and drawings are linked documents. Modifications to the part or assembly will also lead to changes in the drawing document.
A drawing generally consists of several views, which are generated from the model. Views can also be derived from other views, either from standard or from other derived views. A Section View is created, for example, from an existing parent view.

2.1 Options for Drawing Documents

SolidWorks offers a variety of options to customize drawings to a company's standards and to the requirements of a printer or plotter.
Ready-made templates are primarily used in practice. With templates, you can set up company specific features such as logos, units, etc.

T!P For more details, refer to the SolidWorks Help *Setting Options for Drawing Documents*.

2.2 Creating a Drawing for the Example Part Hinge Block

Drawings consist of one or more views that are created from a part or assembly. The part or assembly that is linked to the drawing must be saved before the drawing can be created. A SolidWorks drawing uses the *.SLDDRW file extension. A new drawing gets its name from the first inserted model. The name appears in the Title Block. When you save the drawing, the name of the model appears in the *Save As* dialog box as the default file name with the extension *.SLDDRW. The name can be edited before you save the drawing.

The example *Hinge Block* is open in SolidWorks.

- Please check that the front view of the part matches your desired front view in the drawing. The front view of the 3D part is the resulting front view of the drawing.

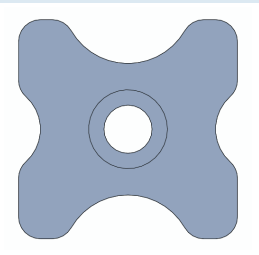

- In the Heads-Up View toolbar, choose the *Front* view.

- If, for some reason, the front view does not match the front view needed for the drawing, search for the view that shows the front of the 3D part and insert that view into the drawing.

The views in the Orientation dialog box are used to determine the output views in the drawing.

Notes

Notes

- Click *View* -> *Modify* -> *Orientation...*, or press the space bar on your keyboard. The Orientation dialog box is displayed.

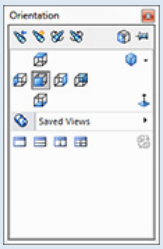

- Drag the Orientation dialog box to a suitable location on your screen.

- Click the *Front* view. Then click the *Update Standard Views* option. You are asked to select a Standard View to assign to the Front view and then prompted by SolidWorks, "Do you want to make this change?"

- By clicking *Yes*, the selected view is assigned to the Front view.

2.2.1 Making the Drawing

- In the Standard toolbar, choose the *Make Drawing from Part/Assembly* command from the *New* flyout tool.

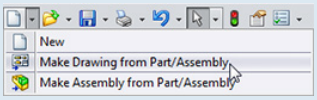

The Drawing window is opened and the Sheet Format/Size dialog box is displayed.

- Select *A4 (ISO)* from the list.

- Click *OK*.

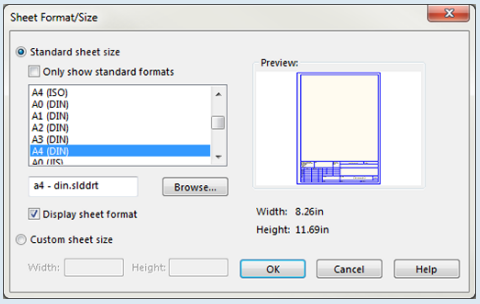

A new drawing document is started using the selected template. The actual sheet scale is shown in the Title Block.

Like the Part/Assembly windows, the Drawing window also has a FeatureManager Design Tree. The FeatureManager for drawings consists of a hierarchical list of items that belongs to the drawing. The + symbol next to an item icon indicates that associated items are present.

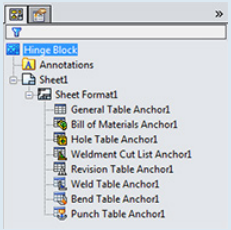

- Click the + symbol to expand the contents of an item.

Standard views contain the Feature list for the Part/Assembly represented in the drawing. Derived views, such as detail or section views, contain other view specific items (detail circles, cutting or section lines, etc.).

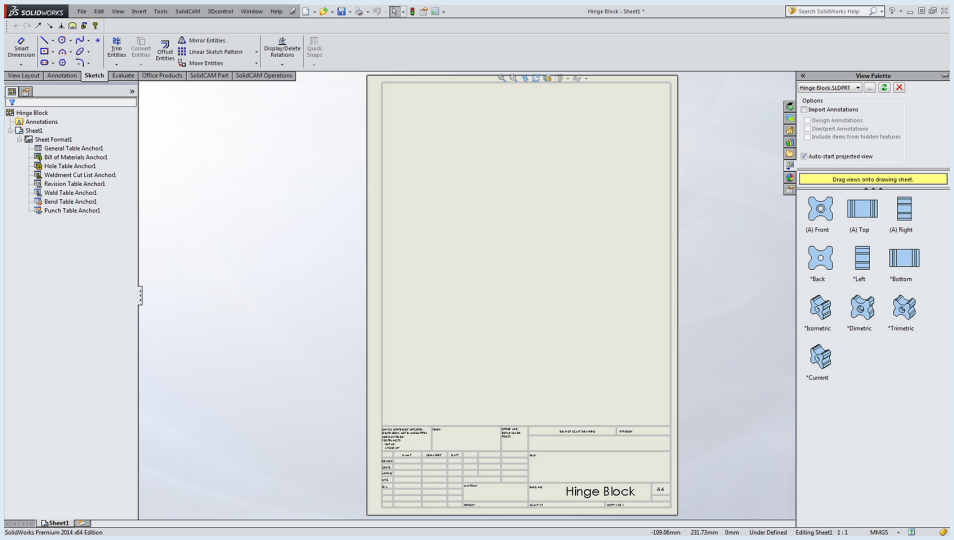

T!P To change the sheet scale, click the sheet with the RM (right mouse button) and select *Properties...*

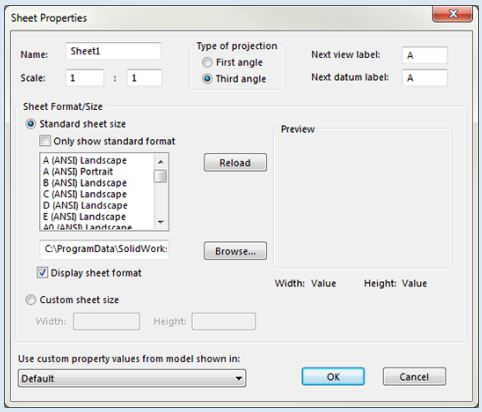

Notes

Notes

2.2.2 The View Palette

For this example, the View Palette is used to bring each of the views onto the drawing sheet.

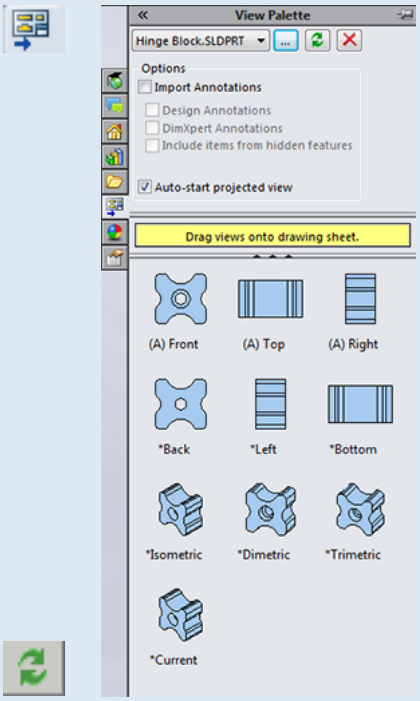

Using the View Palette, located in the Task Pane, is a fast and convenient way to insert one or more predefined views to the drawing.
On the right side of the screen, the View Palette is displayed and all the views of the Part/Assembly are automatically shown.

- Click and hold the *Front View* and move the cursor into the Graphics Area (Drag and Drop).

T!P If you want to delete a view, first delete it from the drawing and then click *Refresh*. This command will clear its use from the View Palette.

- Drop the Front View onto the drawing sheet by releasing the LM.

- Move the cursor in different directions.

With one click, SolidWorks can now automatically insert additional views depending on the direction of the mouse movement.
If you move the cursor diagonally away from the Front View (different directions = different 3D views), the 3D views can be inserted with a mouse click.

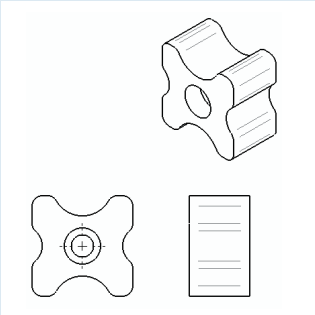

- Insert the *Front View*, *Right View* and an *Isometric View* onto the drawing.

- Click *OK*.

- On the drawing sheet, click the Front View.

The PropertyManager is opened.

- In the Display Style area, click the *Hidden Lines Visible* option.

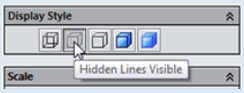

A center line is automatically added (depending on the template) to the Right View on the drawing sheet.

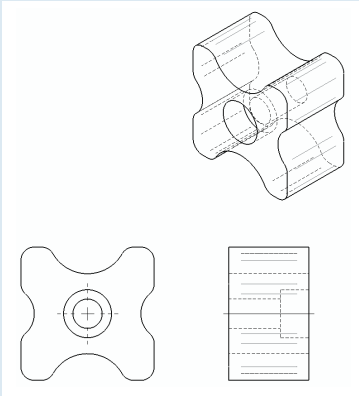

- If it was not added, switch to the *Annotation* tab in the CommandManager and choose the *Centerline* tool.

- In the Auto Insert area of the PropertyManager, enable the *Select View* check box and then select one or more desired drawing views.

- Click *OK*.

2.2.3 Broken-out Section View

To better show the counterbore, it is recommended to make a Break-out Section View.

- In the CommandManager, switch to the *Sketch* toolbar and choose the *Spline* tool.

- Sketch a Spline as shown.

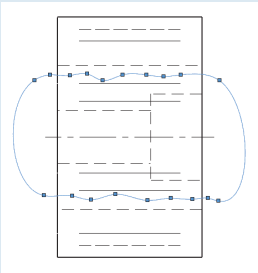

The Spline must be closed.

- In the CommandManager, switch to the *View Layout* toolbar and choose *Broken-out Section*.

Notes

Notes

- In the Depth area of the PropertyManager, click the *Preview* option and then pick on a horizontal edge of the counterbore.

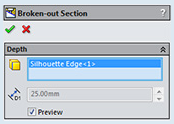

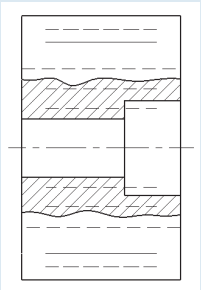

SolidWorks creates the Break-out Section through the middle of the counterbore.

- Click *OK*.

The Break-out Section is generated.

By clicking on a counterbore entity, a relation is automatically added so that the Break-out Section always cuts through the center of the counterbore, even if you change its measurements.

- Pick on the Break-out Section lines in the Graphics Area. When the context toolbar appears, change the *Line Thickness* to 0.25 mm (0.01 in).

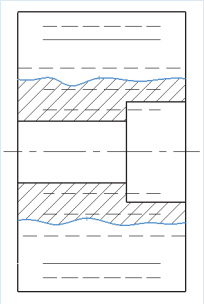

The Break-out Section lines are set to 0.25 mm (0.01 in).

T!P You can select multiple lines by pressing and holding the Ctrl key.

- Change the Display Style of the drawing views back to *Hidden Lines Removed*.

2.2.4 Dimensioning

The inserted views on the drawing sheet need to be dimensioned.

Create a Center Mark for the Radius R15 without Extended lines.

- Click the *Annotation* tab in the CommandManager and then select the *Center Mark* tool.

- Click on the arc with the R15 dimension shown in the drawing.

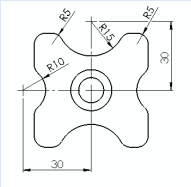

A Center Mark with Extended lines will appear on the drawing sheet.

- In the Display Attributes area of the PropertyManager, deselect the *Use document defaults* and then the *Extended lines* options.

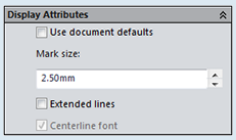

On a drawing sheet with a scale of 1:1, a 2.5 mm (0.1 in) Center Mark will be created.

- Click *OK*.

- In the Annotation toolbar, click the *Smart Dimension* tool and then dimension the drawing views as shown.

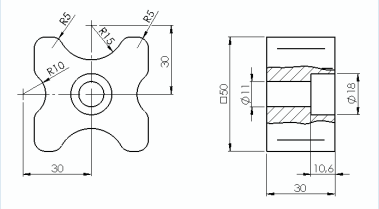

You can add dimensions to a drawing just as you would a sketch. Dimensions in a SolidWorks drawing are associated with the model, and model changes will also be reflected in the drawing.
When adding dimensions, SolidWorks positions the dimensions (according to the template) at 10 mm (0.4 in) from the body edge for the first dimension and at 7 mm (0.28 in) for every dimension thereafter.

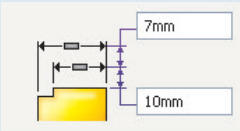

Center Mark lines can be extended if you click and drag the appearing snap points. However, they cannot be shortened beyond their default length.

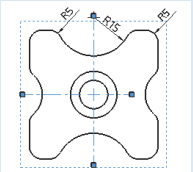

In the Dimension Text area of the PropertyManager, you can add Symbols to the dimensions (e.g., add a Square before the dimension 50).

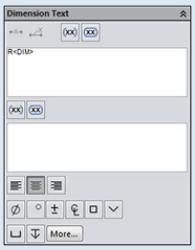

For many dimensions, additional text appears automatically (depending on the template) and does not require further entries.

Notes

Notes

2.2.5 The Sheet Format

In SolidWorks, there is a distinct difference between the Sheet and the Sheet Format.
Anything that is placed on the drawing sheet (views, dimensions, annotations) is stored in the Sheet. The Sheet Format, on the other hand, is selected when you first open a new drawing.
If you want to make changes, you first have to RM click on the drawing sheet and select *Edit Sheet Format*. The items on the Sheet are suppressed so nothing can be deleted by mistake. If you want to work on the drawing sheet again, RM click and select *Edit Sheet*.

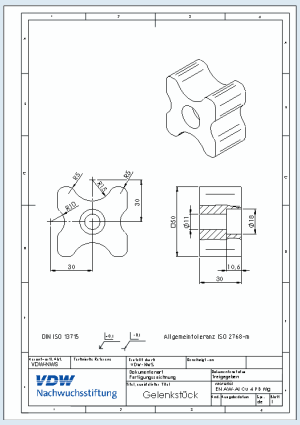

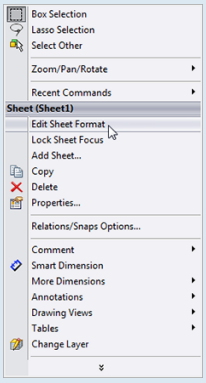

Unwanted entities and lines of text in the Sheet Format can be easily deleted. They can also be restored at any time.
These entities can also be saved and inserted as Blocks.
You can make, save, edit and insert Blocks for frequently used drawing items (e.g., Title Blocks).

- For more details, refer to the SolidWorks Help *Blocks in Drawings*.

The 2D engineering drawing for the Hinge Block is now ready and can be printed by clicking the *Print* command.

- Now create the 2D engineering drawing for the component *Foot.*