Task-based CAD/CAM Training

VDW Nachwuchsstiftung
Foundation for Vocational Education

Design with SolidWorks
Manufacture with SolidCAM

CAD/CAM Basics

Nachwuchsstiftung
Foundation for Vocational Education

Design with SolidWorks
Manufacture with SolidCAM

VDW-Nachwuchsstiftung GmbH
Gildemeisterstraße 60, D-33689 Bielefeld, Tel.: +49 (0) 52 05 / 74 - 25 52,
Fax: +49 (0) 52 05 / 74 - 25 54, kontakt@vdw-nachwuchsstiftung.de
www.vdw-nachwuchsstiftung.de

Disclaimer:
The information in this document was compiled to the best of our knowledge. We, however, assume no liability for any mistakes or damages that may be caused by using this book.

ISBN 978-3-942817-28-8
V1.0

Most up-to-date knowledge for vocational education

Dear reader,

In recent years, technological advancements in the machine tool industry has grown exponentially. This acceleration of advancements is a challenge for vocational education. The VDW-Nachwuchsstiftung (foundation for secondary education) aims to strengthen and improve the transfer of knowledge between industry and vocational education.

This task-based educational training manual was created by the collaboration of vocational educators and industry trained personnel.

The intention of this manual is to introduce the techniques used in the design and manufacturing process. It is important that you exercise self-organization throughout the learning process. This manual also includes some additional information on the technical and methodical aspects of CAD/CAM.

We would like the say “Thank You” to all our partners who supported us during the creation of this document, especially SolidCAM.

We would like to wish you fun and success in learning.

VDW-Nachwuchsstiftung
Bielefeld/Frankfurt

SolidCAM

Introduction

Students,

This training manual was developed for you as both an informational and instructional booklet. It is provided to teach you the basics of CAD/CAM technology. The structure of this manual not only conforms to the teaching methods and curriculum guidelines required by schools and universities, but also the methodologies used by design and manufacturing professionals alike. For each task-based lesson, the final process is shown using part and assembly drawings. A general explanation accompanies each task to be performed, which should not be used as a direct solution. The process of determining an answer to each problem should be solved individually. In the same way, the content in this manual was created to help you develop the skills necessary to apply best practices related to CAD/CAM business operations.

Like in today's manufacturing departments, you will have to produce the components and final assembled part for an adjustable workpiece stop (vise stop). Each lesson is comprised of the following tasks:

- Analysis of the task in relation to the final goal
- Planning of a workflow
- Implementation of the workflow in the design, manufacturing and documentation
- Presentation of the results followed by discussion
- Reflection of the procedures and the end result

A note about the structure of this book:

This book is made up of two main sections: CAD and CAM. Although these two processes can be carried out separately from one another, it is recommended to complete the lessons within the two sections in sequential order to familiarize you with the design and manufacturing process as a whole.

The CAD section is made up of 6 lessons (numbered 1 – 6) and the CAM section is made up of 4 lessons (numbered 1 – 4). Each specific objective is then arranged into chapters.

In the first section, the workpiece stop is designed with SolidWorks. In the second section, SolidCAM is used to define the machining of the components. Due to the complexity of the project, it is broken down into the two sections with increasingly challenging lessons.

For each lesson, an example design is provided and contains all the necessary information in order to complete the task. The examples serve as a guide to assist students in actively developing an effective workflow when using SolidWorks and SolidCAM. The last chapter in the section on CAM is intended for students to apply the procedures that were learned in each of the preceding lessons.

All the templates, drawings and worksheets used in this book can be found in the Course_Materials folder (in A3 or A4 size). All training materials were created using SolidWorks 2016 and SolidCAM 2017. The SolidWorks Student Edition Software can be downloaded from the SolidWorks website. The information required to download the software can be obtained from the CAD/CAM instructor. A demo version of SolidCAM may also be downloaded from www.solidcam.com.

We welcome any suggestions or contributions to improve this training manual.

We would like to again wish you fun and success in learning.

VDW-Nachwuchsstiftung Bielefeld / Frankfurt

Legend

Programming procedure (only for Lesson 1) / Steps

Task / Topic

Help, examples, procedures

Exercise / Example

Solution for the exercise

Tips to facilitate work

Recommendations for the prevention of errors

Reference to other relevant documents

Reference to the Heidenhain manuals

Reference in the Course_Materials folder

Reference to the internet where you can find videos and other helpful information on the Milling process relevant to the current lesson or topic

VDW Nachwuchsstiftung
Foundation for Vocational Education

CAD Contents

Introduction		4
Overview: Design and Manufacturing of the Workpiece Stop		12
CAD Scenario		16
Lesson 1: Designing the Foot		18
1	**How to Create a 3D Solid Model**	**1**
1.1	Basic Procedure for Creating a 3D Solid Model	20
1.2	SolidWorks User Interface	21
1.3	Designing the Part	24
1.3.1	Creating the Solid Model	24
1.3.2	Views and Display Mode	26
1.3.3	Editing Features	27
1.3.4	Removing Material	29
1.4	Using the Hole Wizard	32
1.5	Adding Relations	32
1.6	Saving the Finished Part	34
2	**How to Create 2D Drawings**	**2**
2.1	Options for Drawing Documents	36
2.2	Creating the Drawing	37
2.2.1	Preparing the Part	37
2.2.2	Starting the Drawing	38
2.2.3	The View Palette	40
2.2.4	Broken-out Section View	41
2.2.5	Dimensioning	42
2.2.6	The Sheet Format	44
Lesson 2: Designing the Pin Holder		46
3	**How to Create Like Parts using Configurations**	**3**
3.1	Creating the First Configuration	49
3.2	Creating the Second Configuration	52
Lesson 3: Designing the Side Parts		58
4	**How to Create Symmetric Parts**	**4**
4.1	Creating the Solid Body	61
4.2	Creating the Drawing	66
Lesson 4: Designing the Studs		72
5	**How to Create Round Parts with Circumferential Features**	**5**
5.1	Creating the Basic Part	74
5.2	Adding a Hole	75
5.3	Creating a Polygon	77

VDW Nachwuchsstiftung
Foundation for Vocational Education

Lesson 5: Designing the Stop Pin 80

6	**How to Create a Part with Rotational Symmetry**	**6**
6.1	Creating a Body with the Revolved Boss/Base Feature	82

Lesson 6: Creating the Workpiece Stop Assembly 86

7	**How to Work with Assemblies**	**7**
7.1	The Concept of Assemblies	88
7.2	The Work Environment	89
7.3	Linking of Parts in an Assembly	90
7.3.1	Insertion of the First Component in an Assembly	90
7.3.2	Insertion of Other Components in an Assembly	92
7.4	Design Library Toolbox	97
7.5	Creating an Exploded View	98
7.6	Modifying the Exploded View	99
8	**How to Specify Tolerances and Properties**	**8**
8.1	Setting Tolerances	101
8.2	Setting File Properties	103
9	**How to Create an Assembly Drawing**	**9**
9.1	Procedure for Creating an Assembly Drawing	104
9.2	Creating the Drawing	105
9.2.1	Preparing the Assembly	105
9.2.2	Starting the Drawing	105
9.2.3	Illustration of a Knurl	108
9.2.4	Inserting a Thread into an Assembly Drawing	109
9.2.5	Inserting a Bill of Materials (BOM)	109
9.2.6	Inserting the BOM Balloons	110

CAD Appendix 113

Hand Sketches	114

VDW Nachwuchsstiftung
Foundation for Vocational Education

CAM Contents

CAM Scenario		126
Lesson 1: Manufacturing the Foot		128
1	**How to Manufacture with SolidCAM**	**1**
1.1	CAD/CAM Basics	130
1.2	Programming in SolidCAM	132
1.3	Creating and Defining the CAM-Part	133
1.3.1	Determining the Directory for Saving the CAM-Part	133
1.3.2	Selecting the CNC-Machine Controller	134
1.3.3	Defining the Machine Coordinate System	134
1.3.4	Defining the Stock and Target Models	138
1.4	Saving the CAM-Part	141
1.5	SolidCAM User Interface	142
1.6	Adding a Face Milling Operation (1st Setup)	144
1.6.1	Defining the Tool	147
1.6.2	Defining the Levels	150
1.6.3	Defining the Technology	152
1.6.4	Simulating the Operation	153
1.7	Adding a Profile Operation	155
1.7.1	Defining the Tool	157
1.7.2	Defining the Profile Depth	158
1.7.3	Defining the Technology	161
1.7.4	Defining the Lead in and Lead out Tool Link Movements	163
1.7.5	Calculating and Simulating the Tool Path	165
1.8	Centering the Through Hole	166
1.8.1	Defining the Tool and Tool Data	166
1.8.2	Defining the Drilling Depth	167
1.9	Drilling the Through Hole	168
1.9.1	Using Drill Cycles	169
1.10	Milling the Counterbore	170
1.11	Adding a New Coordinate System	172
1.12	Adding a Face Milling Operation (2nd Setup)	173
1.13	Generating GCode	174
1.14	Documentation	175
Lesson 2: Manufacturing the Pin Holder		178
2	**How to Define and Use Fixtures**	**2**
2.1	Creating and Defining the CAM-Part	180
2.1.1	Defining the Machine Coordinate System	181
2.1.2	Defining the Stock and Target Models	182
2.2	Inserting and Defining a Fixture	182
2.2.1	Inserting the Fixture	182
2.2.2	Defining the Fixture	184

2.3	Slotting with a Profile Operation	185
2.4	Milling the Chamfer	187
2.5	Drilling the Holes	188
2.6	Inserting and Defining a Fixture for the 2nd Setup	189
2.7	Milling the Slot (2nd Setup) and Generating GCode	190

Lesson 3: Manufacturing the Side Parts 194

3	**How to Machine Outside Contours with Pocket Operations**	**3**
3.1	Creating and Defining the CAM-Part	196
3.1.1	Defining the Machine Coordinate System	197
3.1.2	Defining the Stock and Target Models	197
3.2	Adding a Face Milling Operation (1st Setup)	198
3.3	Milling the Step	198
3.4	Milling the Lower Step	200
3.5	Milling the Circular Pockets	204
3.6	Milling the Outside Contour	206
3.7	Drilling the Holes	208
3.8	Adding a Face Milling Operation (2nd Setup)	208
3.9	Making a Counterbore for a Cylinder Head Screw	209
3.10	Engraving	209

Lesson 4: Manufacturing a Coordinate Cube 214

4	**How to Machine with a Multiaxis Machine**	**4**
4.1	Multi-sided Machining and its Basics	216
4.2	Creating and Defining the CAM-Part	218
4.2.1	Defining the Machine Coordinate System	218
4.2.2	Defining the Stock and Target Models	221
4.3	Inserting Fixtures	221
4.4	Milling the Top and Angled Surfaces	222
4.5	Centering the Holes	224
4.6	Drilling the Holes	225

CAM Appendix 227

Drawings	228

Overview:

Design and Manufacturing of the Workpiece Stop

Notes

Completed Project:
Adjustable Workpiece Stop

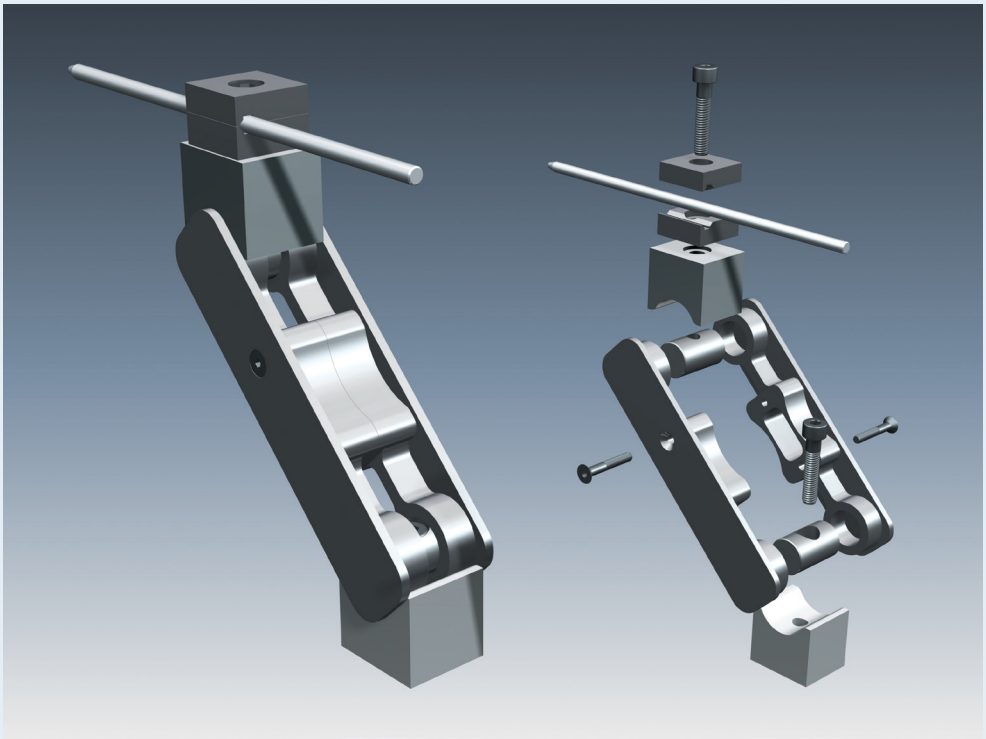

Lessons Overview

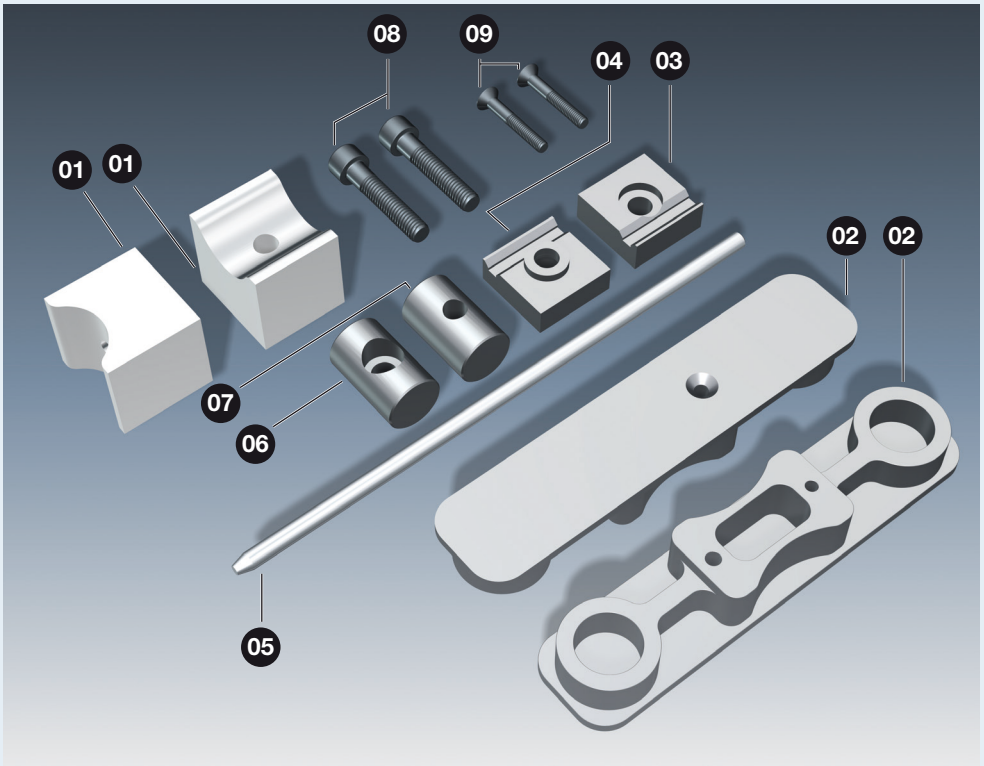

No.	Quantity	Name	Lessons	
			CAD	CAM
01	2	Foot	**1 + 6**	**1**
02	2	Side Part	**3 + 6**	**3**
03	1	Pin Holder Base	**2 + 6**	**2**
04	1	Pin Holder Top	**2 + 6**	**2**
05	1	Stop Pin	**5 + 6**	
06	1	Stud with Counterbore	**4 + 6**	
07	1	Stud with Threaded Hole	**4 + 6**	
08	2	Cylinder Head Screw ISO 4762 - M8 x 55	**6**	
09	2	Countersunk Screw ISO 10642 - M5 x 30	**6**	

Notes

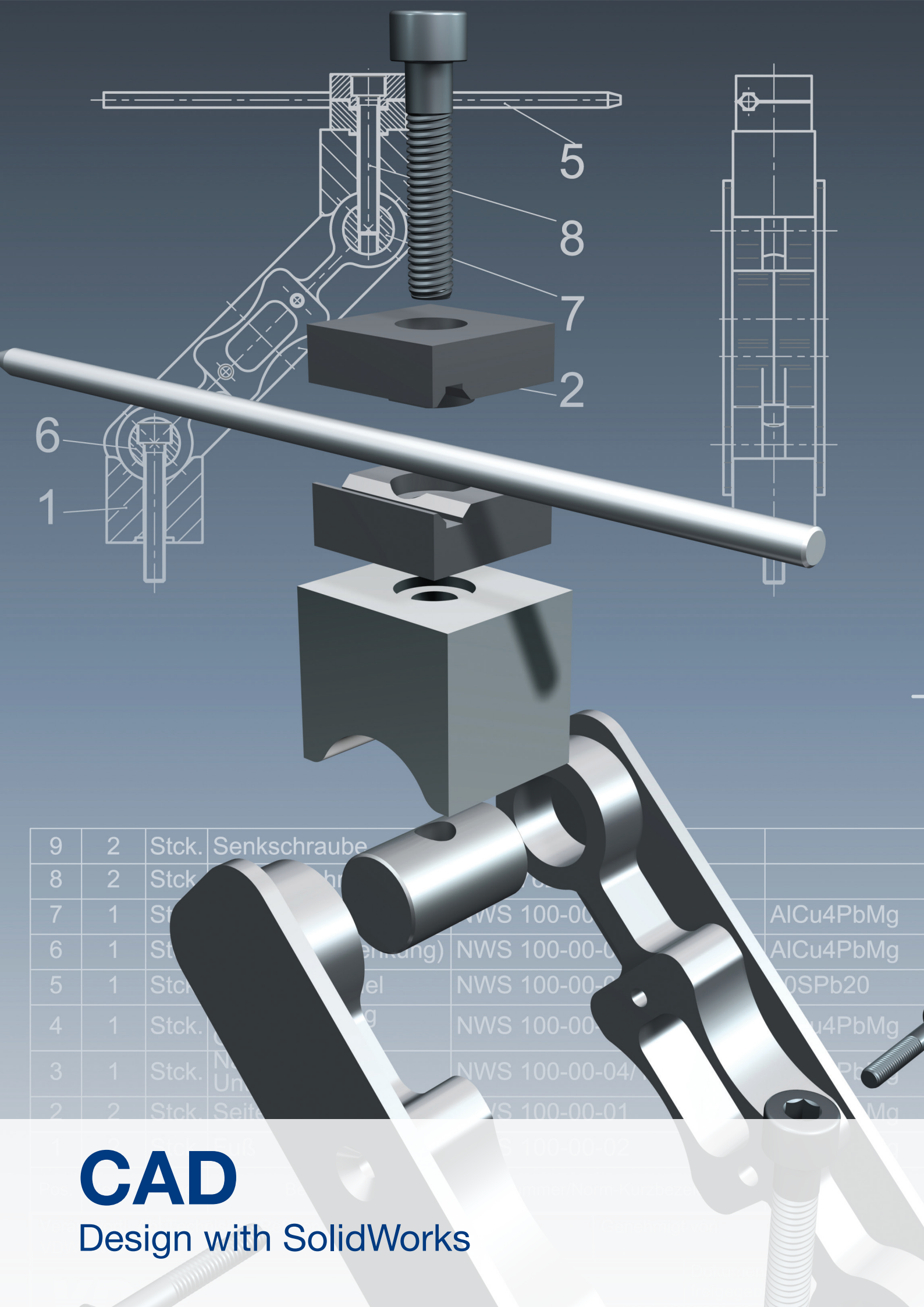

CAD

Design with SolidWorks

Notes

CAD Scenario

In your factory, the Adjustable Workpiece Stop assembly needs to be produced in large numbers. It is your task to create the workpiece stop components according to the provided hand sketches as well as prepare the necessary documents such as component drawings, assembly drawings and bill of materials required for manufacturing. SolidWorks will be used throughout the design process.

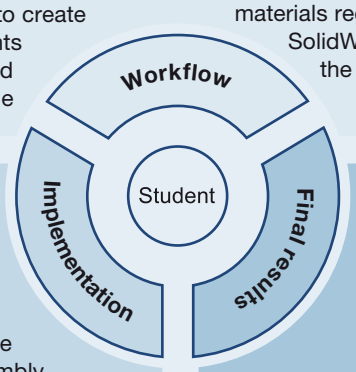

Procedures

1. Problem analysis

- Understand and describe the function of the Assembly
- Discuss the problems and solutions
- Determine the objectives

2. Planning the solution

- Provide information
- Work specifications (designation of the duties, regulations, working hours and the responsibilities)
- Plan the sequence of lessons

3. Prepare and present solutions

- Obtain the necessary information
  - What sketch entities are needed to create the geometries?
  - What features are needed to produce the solid model?
  - How are drawings produced?
  - How are tolerances set?
  - How are variations designed?
  - How are assemblies composed?
  - How are part lists generated?
- Select sketch entities and features
- Design the parts
- Specify the tolerances
- Create the drawings
- Assemble the components
- Generate the bill of materials
- Present the final results

4. Review of the final results

- Evaluate designed parts and drawings
- Evaluate the created Assembly
- Evaluate the implemented procedures
- Discuss the problems and final results

5. Reflection of the procedures

- Assess the learning process
- Assess procedures and methodologies

Design Process

Work on the PC

- Design the parts
- Assemble the components
- Prepare drawings and bill of materials

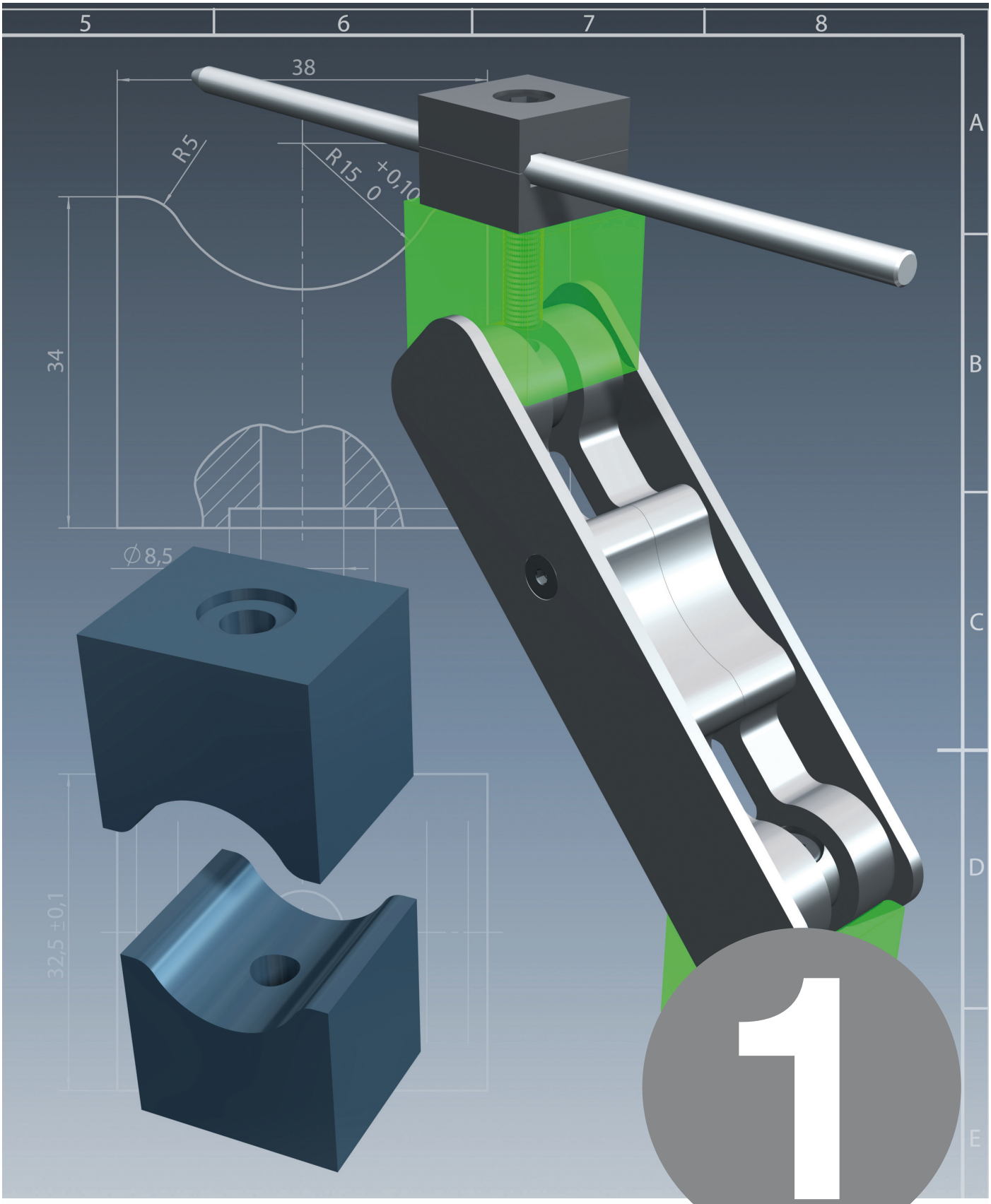

Lesson

Designing the Foot

Nachwuchsförderung | Erst. Pos. 1 | Änd. | Ausgabe/Datum | Ersatz für

Lesson 1:

Designing the Foot

Notes

Create a 3D Part drawing of the component *Foot* and then generate a 2D drawing for production.

The measurements and features can be taken from the hand sketch on the next page.

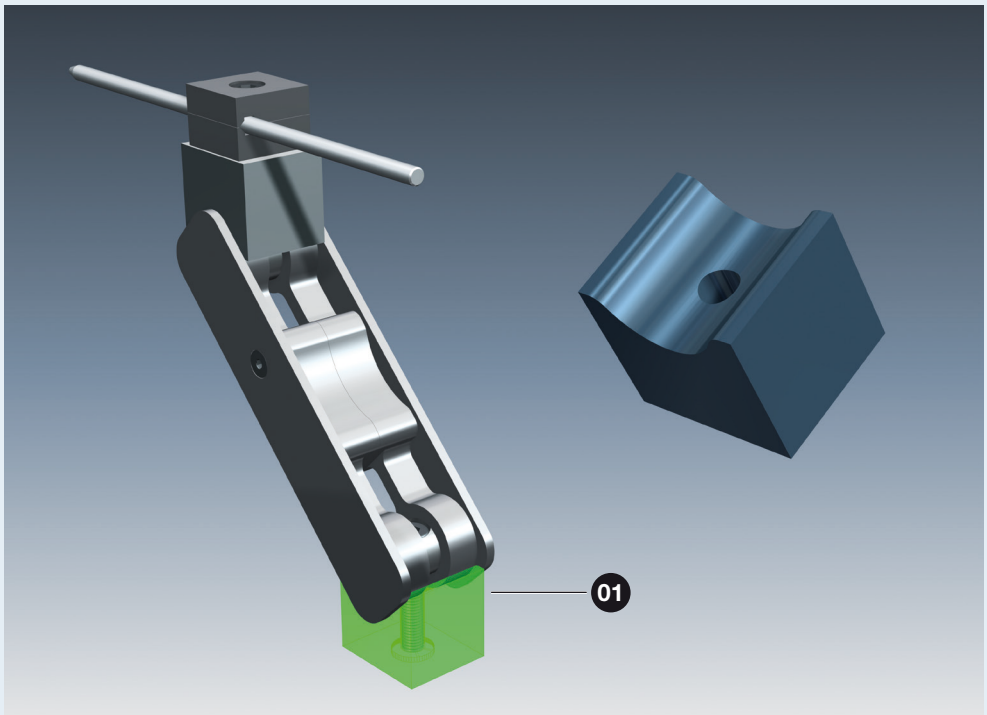

Introduction

Workflow Approach

1. Analyze the above task together with the sketch, and then determine the objective and how to achieve it.

2. Plan and implement a procedure for completing the lesson.

3. Create the 3D solid model, generate a production drawing and then save the results of your work.

4. Evaluate your results and reflect on the procedure.

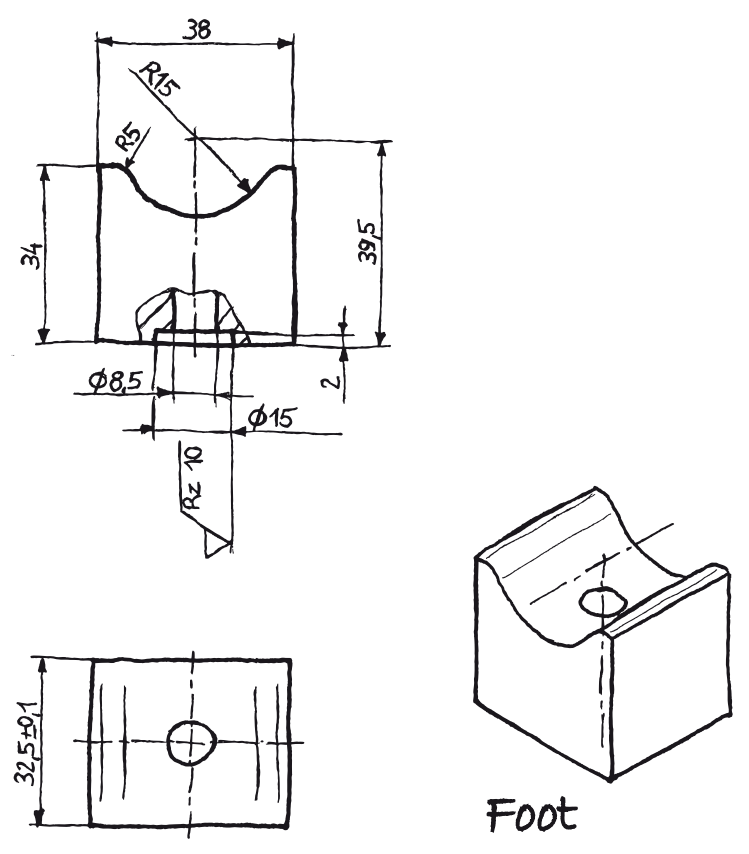

On the following pages, an example part is used to illustrate the steps that are necessary to complete this task.

- The design task for the component Foot can be effectively performed by first completing the example.

Notes

Chapter 1

Creating a 3D Solid Model

Notes

1.1 Basic Procedure for Creating a 3D Solid Model

As a general rule, the following six steps for creating a 3D solid model are similar for all parts to be produced.

Step 1:	■ Start a New SolidWorks Part Document and then immediately save the file with the component name. (e.g., Foot.SLDPRT)	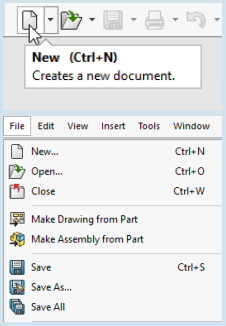
Step 2:	■ Create a new sketch. • Open the sketch. • Draw the 2D geometry features with the sketching tools. In general, ensure that the sketches are always black in color (fully defined).	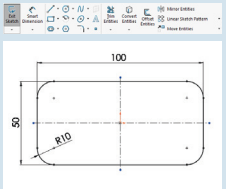
Step 3:	■ Extrude the geometry: • with Extruded Boss/Base. • with Revolved Boss/Base (for Rotating Bodies).	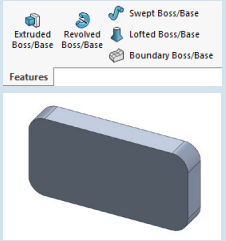
Step 4:	■ Using additional features, the final shape is created by either removing or adding material.	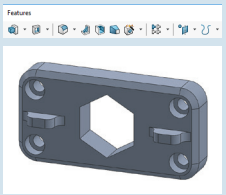
Step 5:	■ Save the SolidWorks Part.	
Step 6:	■ Generate a manufacturing drawing of the SolidWorks Part, print it out and then save the file.	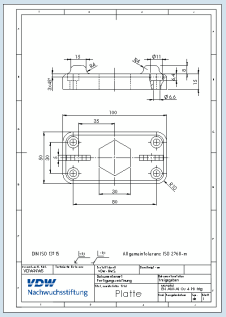

Example: Hinge Block

All the necessary steps and information to complete the design task are provided when creating this example part *Hinge Block*.

- When working through the example, pay attention to the important information in the *Notes* column.

An enlarged view of the hand sketch can be found in the Appendix.

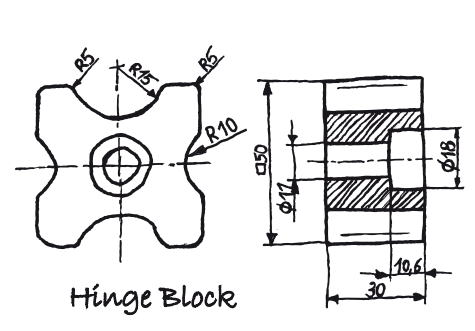

Notes

1.2 SolidWorks User Interface

Open SolidWorks, start a new part document and then save the file with the component name. Familiarize yourself with the SolidWorks User Interface (shown on the next page).

Step 1:
Start a New SolidWorks Part Document and then immediately save the file with the component name.

- Open SolidWorks.

The application window will appear.

- With the left mouse button (LM), click the *New* command in the Standard toolbar to start a New SolidWorks Document.

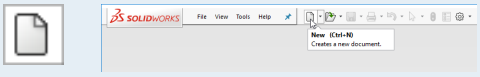

- Choose *Part, a 3D representation of a single design component*.

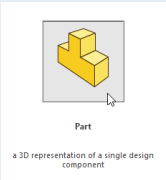

- Save the new part using the *Save As...* command and name it *Hinge Block*.

Notes

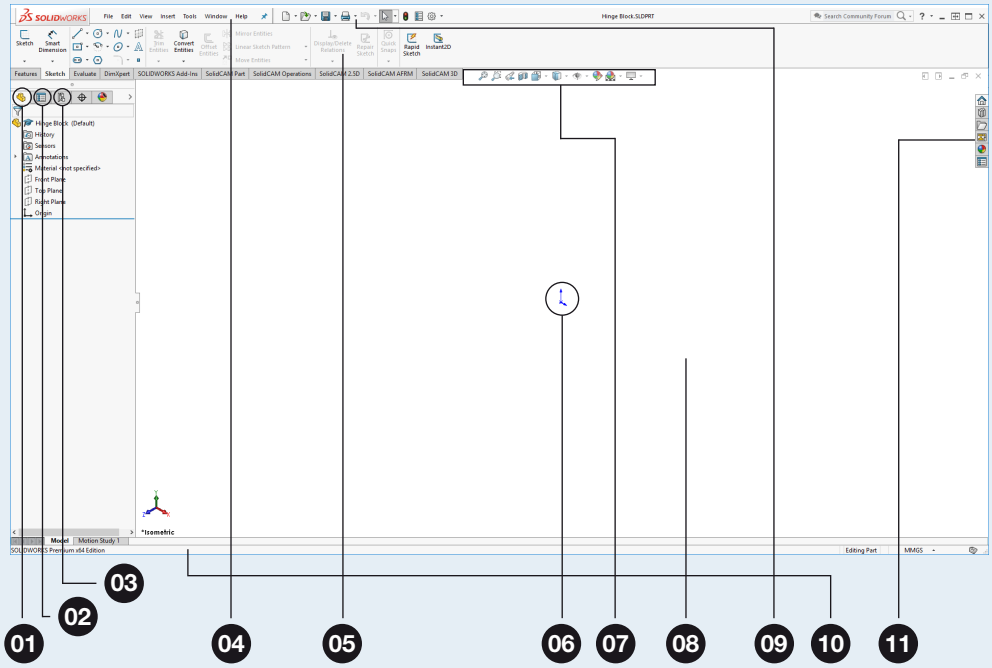

No.	Name
01	FeatureManager
02	PropertyManager
03	ConfigurationManager
04	Menu Bar
05	CommandManager
06	Origin
07	Heads-up View toolbar
08	Graphics Area
09	Standard toolbar
10	Status bar
11	Task Pane

T!P

Moving forward – *click* – means to press the left mouse button (LM). When use of the right mouse button (RM) is needed, it will be instructed specifically.

Exercise

- When working in SolidWorks, you will need to know the technical terms of the User Interface pictured on the left (No. 1-1).
- Complete the table below with the corresponding interface element names and explain their meaning by searching the SolidWorks Help.

No.	Interface Element	Description
01	FeatureManager	Provides an outline view of the active part, assembly, or drawing.

Notes

Notes

1.3 Designing the Part

1.3.1 Creating the Solid Model

Create a sketch, which is the basis for the solid model.

Step 2:
Create the new sketch.

- In the FeatureManager Design Tree, click the *Front Plane* and open a new sketch from the appearing context toolbar.

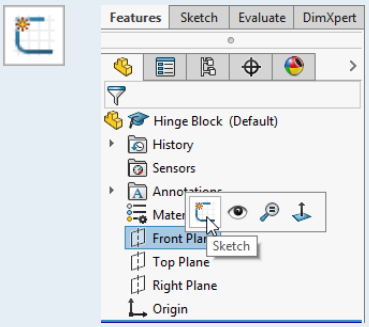

The geometry created on the Front Plane is the front view of the drawing. The CommandManager will be automatically displayed with the Sketch toolbar active.

- In the Sketch toolbar, choose *Center Rectangle* from the *Rectangle* flyout tool.

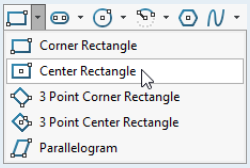

- From the Origin, sketch a rectangle of any size.

Note the appearance of the cursor changes when snapping the Origin.

- To close the Rectangle PropertyManager, press the *Esc* key or click *OK*.

Esc

- In the Sketch toolbar, click the *Smart Dimension* tool.

- Pick on the top edge of the rectangle in the Graphics Area, move the cursor upwards and then click to add the dimension.

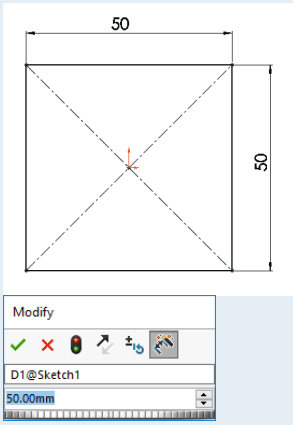

- In the Modify dialog box, enter the width measurement.

- Add the second dimension as shown in the illustration.

- Exit the sketch by clicking the icon shown on the right.

Create the base feature.

Step 3:
Extrude the geometry.

Extruded Boss/Base Feature

- In the CommandManager, click the *Features* toolbar and choose the *Extruded Boss/Base* tool.

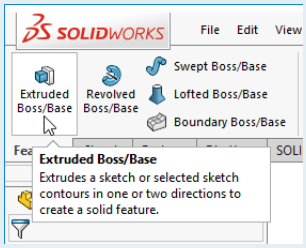

The Extruded Boss/Base feature adds material to a part. A sketch is required in order to use this feature.

- Under Direction 1, choose *Blind* from the drop-down menu.

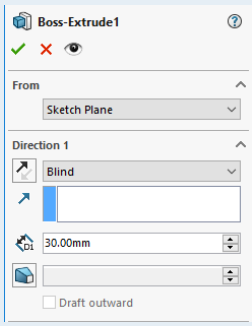

The Blind condition extends the feature from the sketch plane for a specified distance.

- In field D1, enter the depth measurement of the Hinge Block.
- Click *OK*.

The base feature (solid body) is created as the foundation of the part.

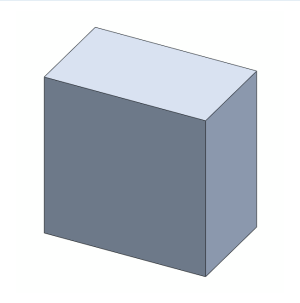

For the duration of this exercise, more features will be added to this solid body.

The feature name *Boss-Extrude1* appears in the FeatureManager.

- Click the feature name using a delayed double-click. This action enables you to enter a new name.
- Enter *Solid Body* for the new name.

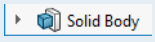

Notes

Notes

1.3.2 Views and Display Mode

With the Heads-up View toolbar, you can change the display mode of the model as well as adjust its orientation.

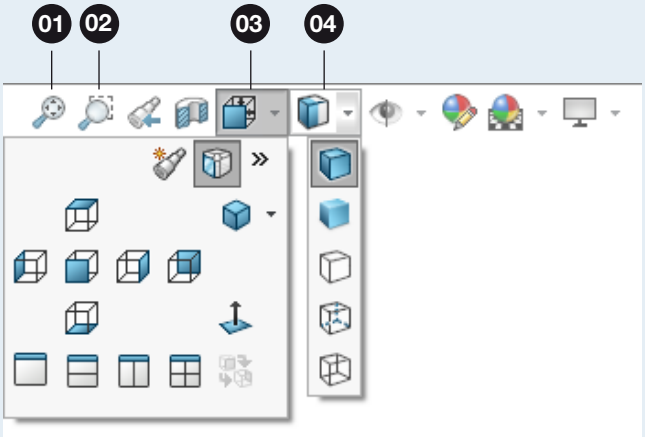

No.	Name	Description
01	Zoom to Fit	Zooms the model to fit the window.
02	Zoom to Area	Zooms to the area you select with a bounding box.
03	View Orientation	Changes the current view orientation or number of viewports.
04	Display Style	Changes the display style for the active view.

Pressing and holding the mouse wheel and then moving the mouse enables you to dynamically rotate the model in the Graphics Area.

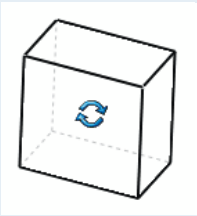

Pressing and holding the mouse wheel along with the *Ctrl* key enables you to pan (or move) the model in the Graphics Area.

Ctrl

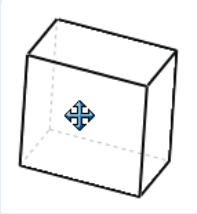

Scrolling with the mouse wheel enables you to zoom in or out.

1.3.3 Editing Features

You have created your first feature. Often times, you will have to modify an existing feature.

SolidWorks makes it easy for you to edit features and sketches or even delete them if necessary.

- Practice some modifications.

Editing the Definition of a Feature

- In the FeatureManager Design Tree, click the feature *Solid Body* and choose *Edit Feature* from the appearing context toolbar.

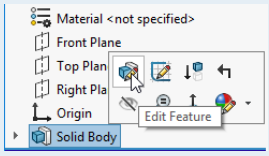

The PropertyManager opens and enables you to make feature modifications (e.g., Direction, Depth or the End Condition).

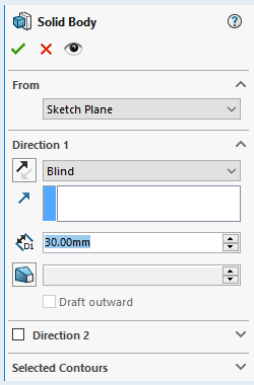

- Clicking *OK* will save your changes and exit the PropertyManager.

Editing a Sketch

- In the FeatureManager Design Tree, click the arrow symbol. The contents of the Solid Body feature is expanded.

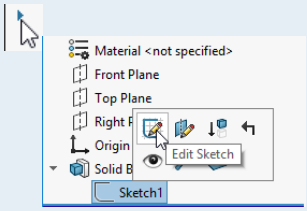

- Click the associated item *Sketch1*.

- Click *Edit Sketch* in the appearing context toolbar. The sketch that was used to create the Solid Body feature is opened for editing.

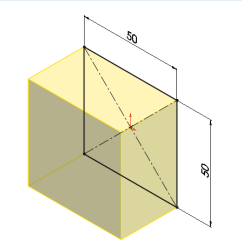

Notes

Notes

- In the Heads-Up View toolbar, click the *View Orientation* flyout tool and choose *Normal To*. This will align the view with the sketch plane.

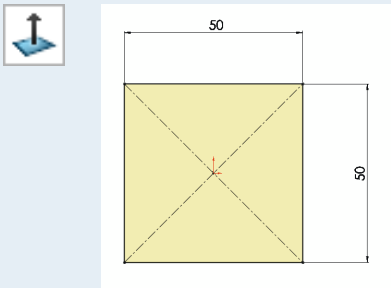

- To modify a dimension, double-click it in the Graphics Area.

The Modify dialog box appears and enables you to change the measurement value.

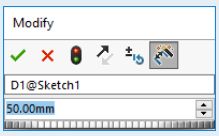

- Clicking *OK* will save the modified value and exit the dialog box.

- To delete dimensions and sketch entities, pick on them in the Graphics Area and then press the *Del* key.

Del

Deleting Features and Sketches

- Features can be deleted in the FeatureManager Design Tree by RM clicking the feature and choosing the *Delete* command from the shortcut menu.

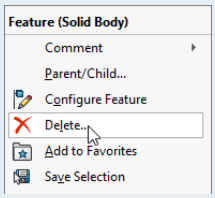

The Confirm Delete dialog box appears.

- Select the *Delete absorbed features* option to also delete the associated item *Sketch1*.

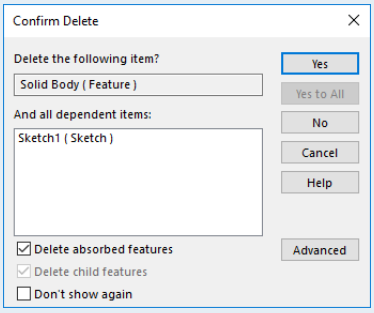

If the check box is not selected, the sketch will be kept.

Sketches can be deleted in the same way. If a feature is dependent on a sketch however, it cannot be deleted.

- If features and sketches are deleted in error, the action can be reversed by clicking the *Undo* command.

1.3.4 Removing Material

Create the final shape of the part by removing material.

Step 4:
Using additional features, the final shape is created by either removing or adding material.

Extruded Cut Feature

- Open a new sketch on the Front Plane and then choose Normal To from the Heads-Up View toolbar.

The view is rotated and zoomed so that its orientation is Normal To the sketch plane.

T!P In the SolidWorks Standard toolbar, click *Options*. When the System Options dialog box appears, click *Sketch* in the tree on the left and select the option *Auto-rotate view normal to sketch plane on sketch creation*. Newly created sketches will be rotated Normal To the sketch plane automatically.

- Sketch a horizontal and vertical centerline, and then sketch two circles, Ø30 mm (1.2 in) and Ø20 mm (0.8 in).

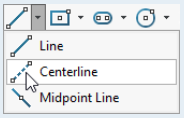

- After selecting the *Centerline* tool, align the cursor with the Origin.

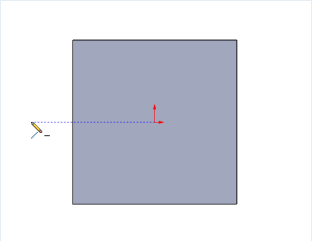

- When the dotted line appears, click to horizontally set the starting point of the centerline.
- Set the endpoint of the centerline.

The cursor will snap into position when the centerline geometry is perfectly horizontal.

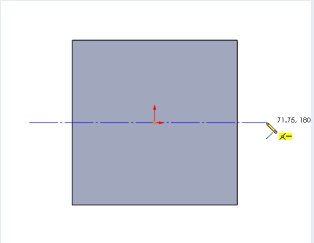

Notes

Notes

- When sketching the circles, ensure that the circle centers are positioned on the centerlines.

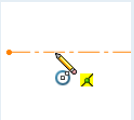

- Using the Dimensions tools, position the circles as shown.

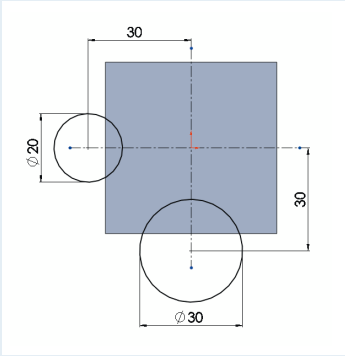

- To mirror the circle entities, select one circle and the centerline by which you want to mirror it while pressing the *Ctrl* key. Then click the *Mirror Entities* command in the Sketch toolbar.

Ctrl

The entities are mirrored.

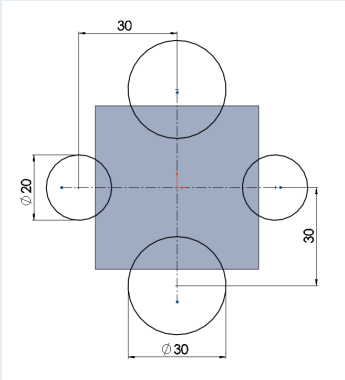

T!P A sketch shown in black indicates that it is fully defined. It is important to make sure that your sketches are always fully defined.

- In the CommandManager, click the *Features* toolbar and select *Extruded Cut*.

The Extruded Cut feature removes material from the solid body. Like the Extruded Boss/Base feature, it also requires a sketch.

- In the Heads-Up View toolbar, choose the *Isometric* view to better orient the model.

- Under Direction 1, choose the *Through All* condition. If necessary, select the *Reverse Direction* option.

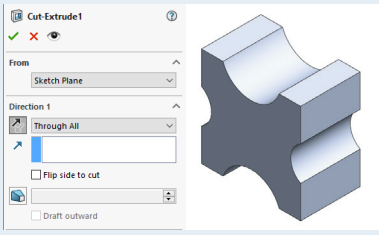

- Click *OK*.

Fillet Feature

- In the Features toolbar, choose the *Fillet* tool.

The Fillet feature creates a rounded internal or external face along one or more edges.

- Pick on the 12 edges to be filleted and enter a Radius value of 5.00 mm in the Fillet PropertyManager.
- To show the changes dynamically on the model, activate the *Full preview* option.

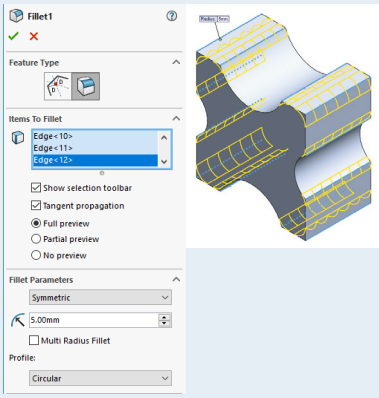

If you pick on an edge a second time, it will be deselected and removed from the Items To Fillet.

- Click *OK*.

Notes

Notes

1.4 Using the Hole Wizard

- To create the counterbore, first orient the model so that you can work on the front face.

- Pick on the front surface in the Graphics Area. When the context toolbar appears, click *Normal To*.

- Choose *Hole Wizard* from the Features toolbar. For the Hole Type, select *Counterbore*. In the Standard drop-down menu, select *DIN* and then select *Hex Socket Head Cap - EN ISO 4762* for the Type. In the Hole Specifications area, click the *Show custom sizing* check box. Enter the dimensions according to the Hinge Block hand sketch.

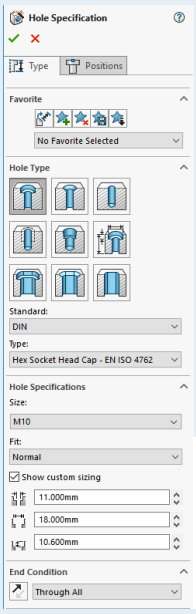

- Switch to the *Positions* tab in the PropertyManager. The Sketch *Point* command is automatically activated. Pick on the Origin with the cursor to create the hole. Click *OK* to confirm the hole creation and exit the Hole Wizard dialog box.

The specified hole is created.

1.5 Adding Relations

After you define the hole properties, the position of the hole must be placed on the Origin.

If you have placed the hole in a location on the front surface other than the Origin, a geometric relation can be used to fix the positioning of the hole to the Origin.

When a sketch entity is fully defined, it is shown in black. Blue sketch entities indicate that they are under defined. Under defined sketch entities can be moved around in the Graphics Area by clicking and dragging them with the mouse. Relations can be used to fully define an under defined sketch. You can create geometric relations between sketch entities, or between sketch entities and planes, axes, edges or vertices. Relations between sketch entities and model geometry, in either 2D or 3D sketches, are an important means of building in design intent. Relations (e.g., Horizontal, Vertical, Tangent, Symmetric) can be used to produce a fully defined sketch with minimal dimensions. For the Extruded Cut feature, the Sketch Relation *Coincident* was used to determine the center point positions of the circles. The relation was added automatically when snapping the circles to the centerlines. A relation can be added manually in the instance you add a sketch entity without snapping the cursor.

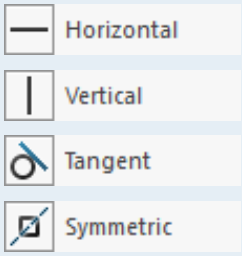

- To add the relation manually, select the Origin and the center point of the hole while pressing and holding down the *Ctrl* key.

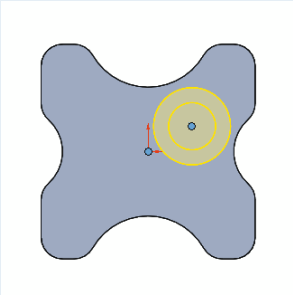

The selected entities are highlighted in blue.

Under the Add Relations area in the PropertyManager, the available relations for the selected entities will be shown.

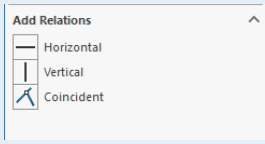

- Use the Sketch Relation *Coincident* in order to fix the center point of the hole to the Origin.

Notes

Notes

- Click the *OK* button to confirm the added relation and then click *OK* again to exit the Hole Wizard dialog box.

- In the Heads-Up View toolbar, choose the *Isometric* view to better orient the model.

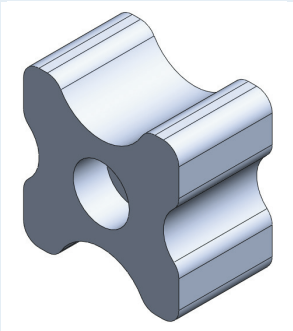

The design task of the example part *Hinge Block* is now completed.

1.6 Saving the Finished Part

Save the finished part. Note the different file extensions that are used and can be interpreted by SolidWorks.

Step 5:
Save the SolidWorks Part.

- Click the *Save* command in order to save the current state of your work.

The proper saving of files is just as important as the proper building of the parts/assemblies.

It is recommended to always plan and think about the organization of your data ahead of time.

A single SolidWorks design component uses the *.SLDPRT file extension.

Design Task: Foot

- Now create the component *Foot* according to the sketch shown on the right.

The steps that are necessary to complete this task were learned during the creation of the Hinge Block.

An enlarged view of the hand sketch can be found in the Appendix.

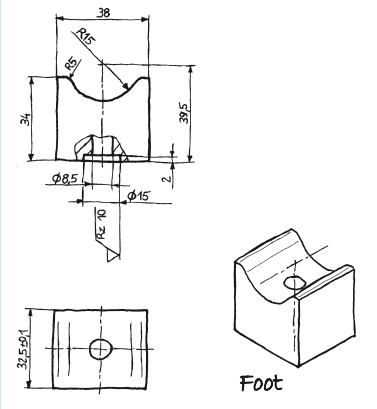

Notes

Chapter 2

Creating 2D Drawings

Notes

Create a standardized manufacturing drawing of the Hinge Block and print out the document.

Step 6:
Make Drawing from Part/Assembly, print it out and then save the file.

You can make a 2D drawing from a 3D model document (part or assembly). Parts, assemblies and drawings are linked documents. Modifications to the part or assembly will also lead to changes in the drawing document.

A SolidWorks drawing uses the *.SLDDRW file extension.

A drawing generally consists of several views, which are generated from the model. Views can also be derived from other views, either from standard or from other derived views. A section view is created, for example, from an existing parent view.

2.1 Options for Drawing Documents

SolidWorks offers a variety of options to customize drawings to a company's standards and to the requirements of a printer or plotter.

Ready-made templates are primarily used in practice. With templates, you can set up company specific features such as logos, units, etc.

T!P For more details, refer to the SolidWorks Help *Setting Options for Drawing Documents*.

2.2 Creating the Drawing

2.2.1 Preparing the Part

SolidWorks drawings consist of one or more views that are created from a part or assembly. The part or assembly that is linked to the drawing must be saved before the drawing can be created.

A new drawing gets its name from the first inserted model. The name appears in the Title Block. When you save the drawing, the name of the model appears in the Save As dialog box as the default file name plus .SLDDRW extension. The name can be edited before you save the drawing.

Prepare the example part *Hinge Block* for creation of the drawing.

- Please check that the front view of the part matches your desired front view in the drawing.

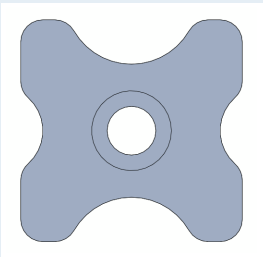

The front view of the 3D part is the resulting front view in the drawing.

- In the Heads-Up View toolbar, choose the *Front* view.

- If, for some reason, the front view does not match the front view needed for the drawing, search for the view that shows the front of the 3D part and insert that view into the drawing.

The views in the Orientation dialog box are used to determine the output views in the drawing.

- Click *View* > *Modify* > *Orientation...*, or press the space bar on your keyboard. The Orientation dialog box is displayed.

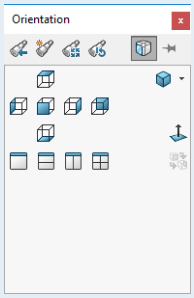

Notes

Notes

- Drag the Orientation dialog box to a suitable location on your screen.
- Click the *Front* view. Then click the *Update Standard Views* option. You are asked to select a Standard View to assign to the *Front* view and then prompted by SolidWorks, “Do you want to make this change?”

- By clicking *Yes*, the selected view is assigned to the *Front* view.
- Save your work.

2.2.2 Starting the Drawing

- In the Standard toolbar, choose the *Make Drawing from Part/Assembly* command from the *New* flyout tool.

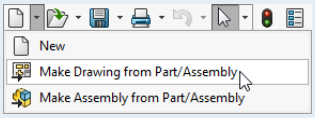

The Drawing window is opened and the Sheet Format/Size dialog box is displayed.

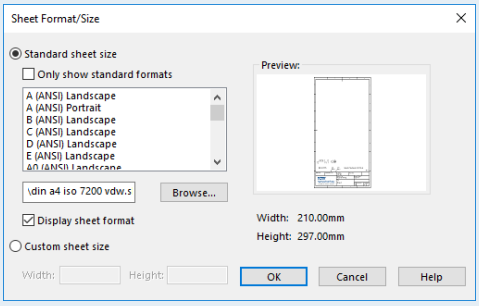

- Click *Browse* and locate the provided Sheet Formats.
- From the Open dialog box, open the Sheet Format *DIN A4 ISO 7200 VDW*.
- Click *OK*.

A new drawing document is started using the selected template. The sheet scale is displayed in the Status bar at the bottom of the SolidWorks window.

Like the Part/Assembly windows, the Drawing window also has a FeatureManager Design Tree.

For drawings, the FeatureManager consists of a hierarchical list of items that belongs to the drawing. The arrow symbol next to an item icon indicates that associated items are present.

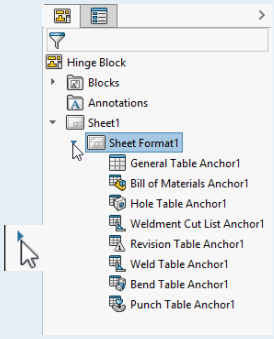

- Click the arrow symbol to expand the contents of an item.

Standard views contain the Feature list for the Part/Assembly represented in the drawing. Derived views, such as detail or section views, contain other view specific items (detail circles, cutting or section lines, etc.).

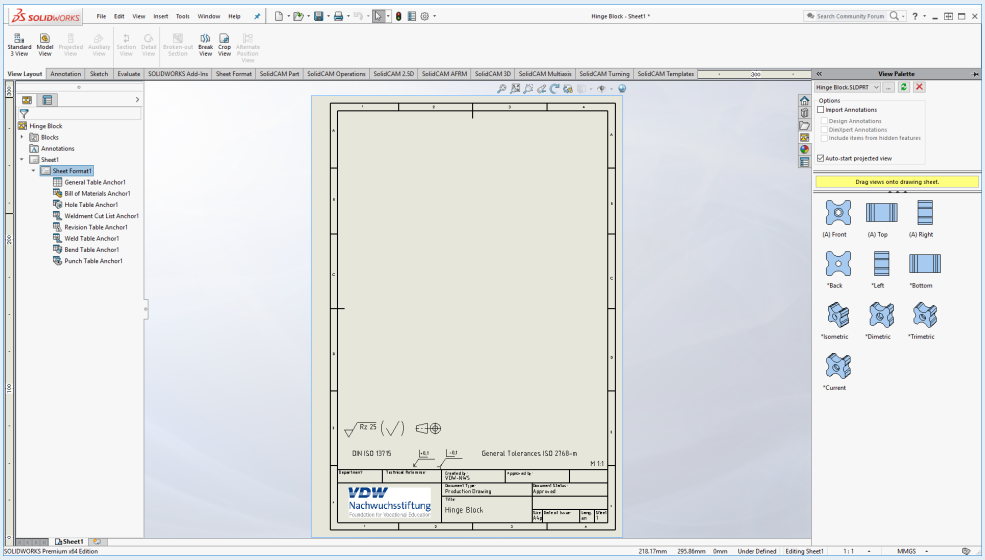

T!P To change the sheet scale, click the sheet with the RM (right mouse button) and select *Properties...*

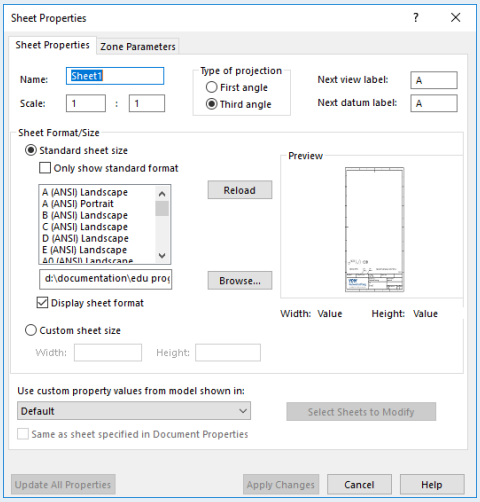

Notes

Notes

2.2.3 The View Palette

For this exercise, use the View Palette to bring each of the views onto the drawing sheet.

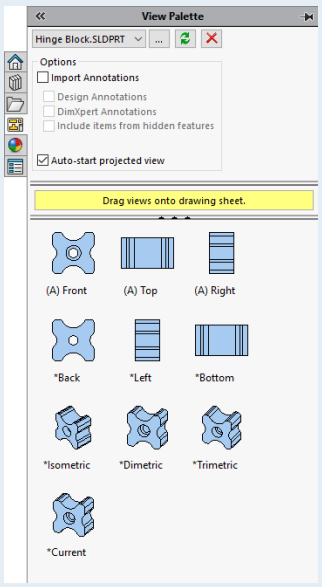

Using the View Palette, located in the Task Pane, is a fast and convenient way to insert one or more predefined views to the drawing.

On the right side of the screen, the View Palette is displayed and all the views of the Part/Assembly are automatically shown.

- Click and hold the *Front* view and then move the cursor into the Graphics Area (Drag and Drop).

T!P If you want to delete a view, first delete it from the drawing and then click *Refresh*. This command will clear its use from the View Palette.

- Drop the view onto the drawing sheet by releasing the LM.

- Move the cursor around in different directions.

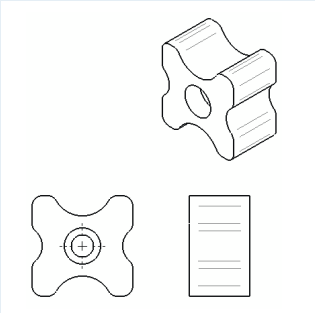

With one click, SolidWorks can now automatically insert additional views depending on the direction of the mouse movement.
If you move the cursor diagonally away from the front view (different directions = different 3D views), the 3D views can be inserted with a mouse click.

- Insert the *Front* view, *Right* view and an *Isometric* view onto the drawing.

- Click *OK*.

Notes

- On the drawing sheet, click on the front view.

The PropertyManager is opened.

- In the Display Style area, click the *Hidden Lines Visible* option.

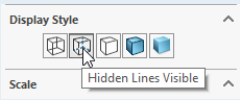

A centerline is automatically added (if enabled in the Document Properties) to the right view on the drawing sheet.

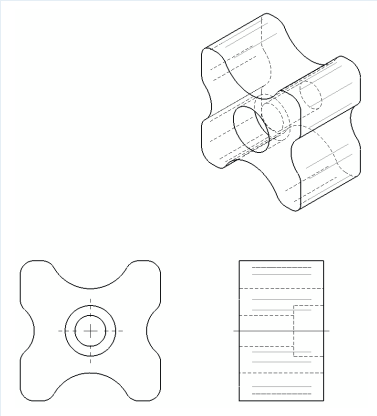

- If it was not added, switch to the *Annotation* toolbar in the CommandManager and choose the *Centerline* tool.

- In the Auto Insert area of the PropertyManager, enable the *Select View* check box and then select one or more desired drawing views.

- Click *OK*.

2.2.4 Broken-out Section View

To better show the counterbore, it is recommended to generate a broken-out section view.

- In the CommandManager, switch to the *Sketch* toolbar and choose the *Spline* tool.

- Sketch a spline as shown.

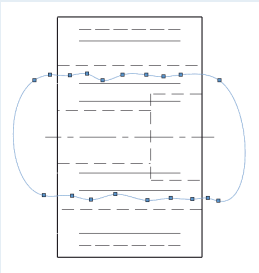

The spline must be closed.

- In the CommandManager, switch to the *View Layout* toolbar and choose *Broken-out Section*.

Notes

- In the PropertyManager Depth area, enable the *Preview* check box and then pick on a horizontal edge of the counterbore.

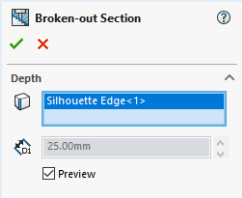

SolidWorks creates the broken-out section through the middle of the counterbore.

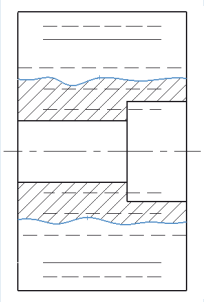

- Click *OK*.

The section view is generated.

By clicking on a counterbore entity, a relation is automatically added so that the broken-out section always cuts through the center of the counterbore, even if you change its measurements.

- Pick on the broken-out section lines in the Graphics Area. When the context toolbar appears, change the *Line Thickness* to 0.25 mm (0.01 in).

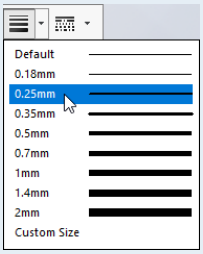

The broken-out section lines are set to 0.25 mm (0.01 in).

T!P You can select multiple lines by pressing and holding the *Ctrl* key.

- Change the Display Style of the drawing views back to *Hidden Lines Removed*.

2.2.5 Dimensioning

The inserted views on the drawing sheet need to be dimensioned.

- Add the arc R15 mm (0.6 in) dimension as shown.

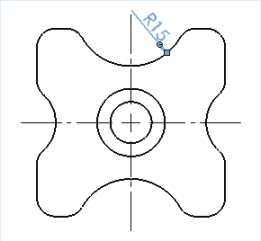

Create a Center Mark for the dimension without Extended lines.

- Click the *Annotation* toolbar in the CommandManager and then select the *Center Mark* tool.

A Center Mark with Extended lines will appear on the drawing sheet.

- In the Display Attributes area of the PropertyManager, deselect the *Use document defaults* and the *Extended lines* options.

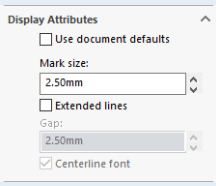

On a drawing sheet with a scale of 1:1, a 2.5 mm (0.1 in) Center Mark will be created.

- Click *OK*.

- In the Annotation toolbar, click the *Smart Dimension* tool and then add the remaining dimensions to the drawing views as shown.

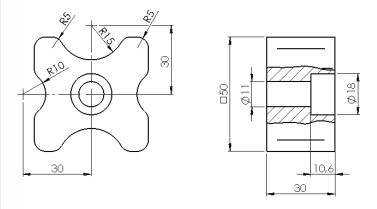

You can add dimensions to a drawing just as you would a sketch. Dimensions in a SolidWorks drawing are associated with the model, and model changes will also be reflected in the drawing.

When adding dimensions, SolidWorks positions the Dimensions (according to the Document Properties) at 10 mm (0.4 in) from the body edge for the first dimension and at 6 mm (0.24 in) for every dimension thereafter.
Center Mark lines can be extended if you click and drag the appearing snap points. However, they cannot be shortened beyond their default length.

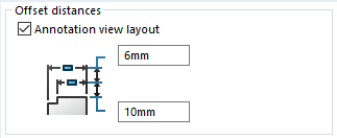

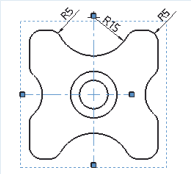

In the Dimension Text area of the PropertyManager, you can add Symbols to the dimensions (e.g., add a Square before the dimension 50).

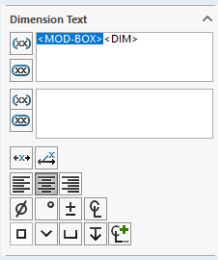

For many dimensions, additional text appears automatically and does not require further entries.

Notes

Notes

2.2.6 The Sheet Format

In SolidWorks, there is a distinct difference between the Sheet and the Sheet Format.

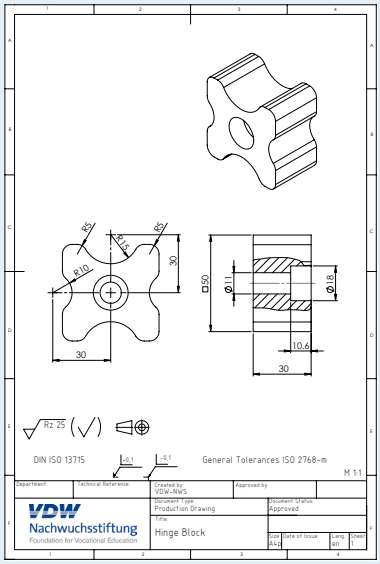

Anything that is placed on the drawing sheet (views, dimensions, annotations) is stored in the Sheet.

The Sheet Format, on the other hand, is selected when you first open a new drawing. If you want to make changes, you first have to RM click the drawing sheet and select *Edit Sheet Format*.

The items on the Sheet are suppressed so nothing can be deleted by mistake.

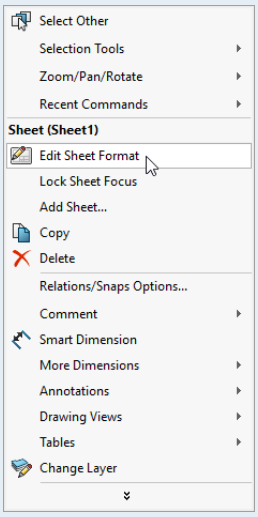

Unwanted entities and lines of text in the Sheet Format can be easily deleted. They can also be restored at any time.
These entities can also be saved and inserted as Blocks.
You can make, save, edit and insert Blocks for frequently used drawing items (e.g., Title Blocks).

To work on the drawing sheet again, RM click and select *Edit Sheet*.

- For more details, refer to the SolidWorks Help *Blocks in Drawings*.

The 2D drawing for the Hinge Block is now ready and can be printed by clicking the *Print* command.

- Now create a 2D drawing for the component *Foot*.

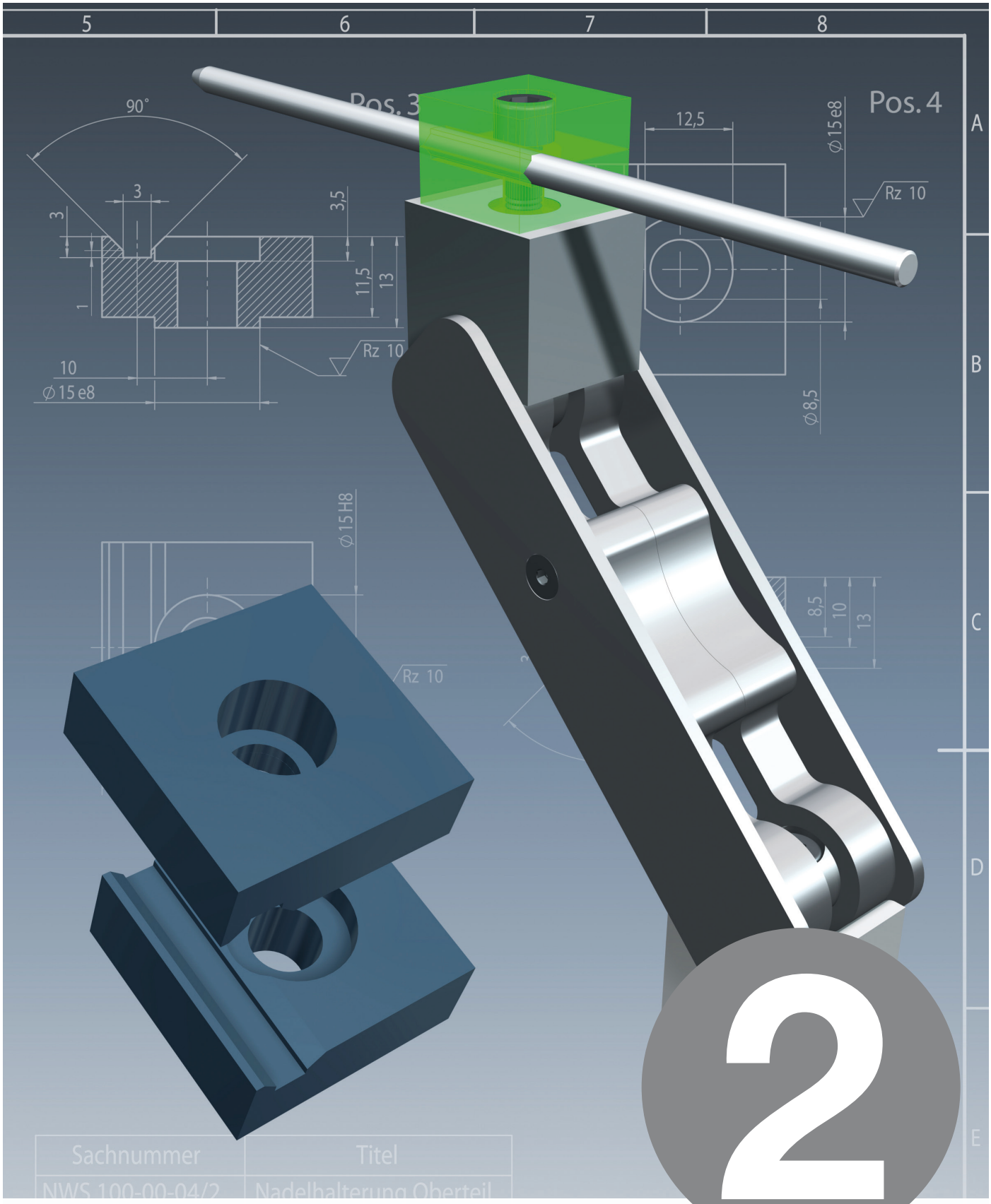

2

Lesson

Designing the Pin Holder

Lesson 2:

Designing the Pin Holder

Notes

Create a 3D Part drawing of both the components *Pin Holder Base* and *Pin Holder Top* and then generate a 2D drawing for production.

The measurements and features can be taken from the hand sketch on the next page.

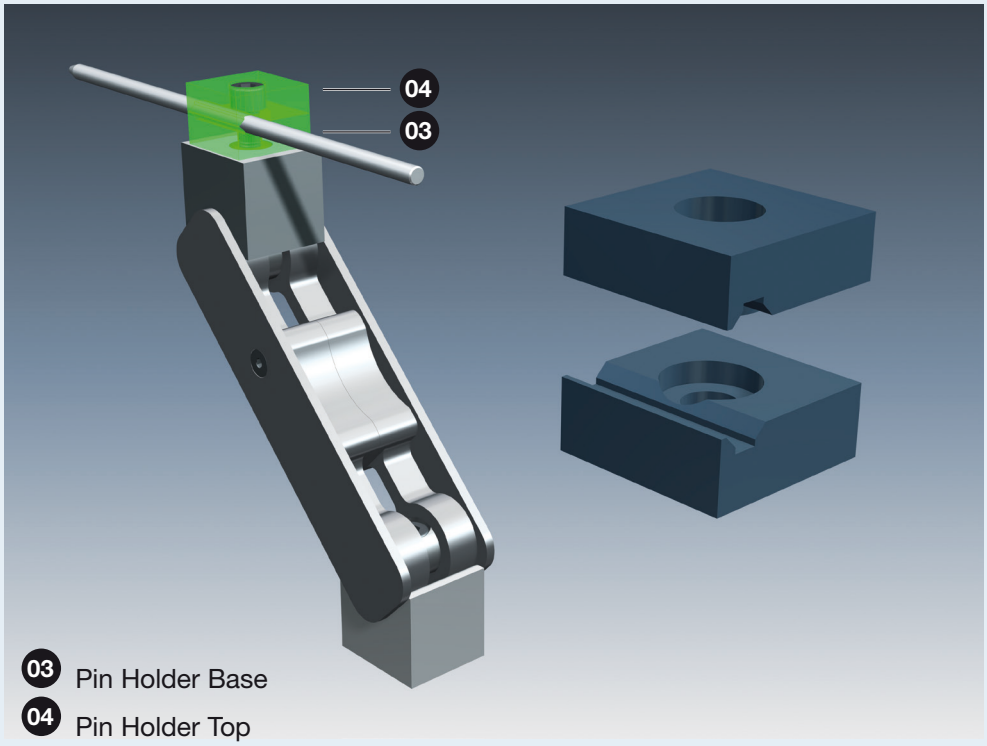

The Pin Holder consists of two parts that are very similar. In this exercise, you should therefore create the component *Pin Holder Base* and then, using configurations, create the component *Pin Holder Top*.

Configurations allow you to create multiple variations of a part or assembly model within a single document. Configurations provide a convenient way to develop and manage families of models with different dimensions, components, or other parameters.

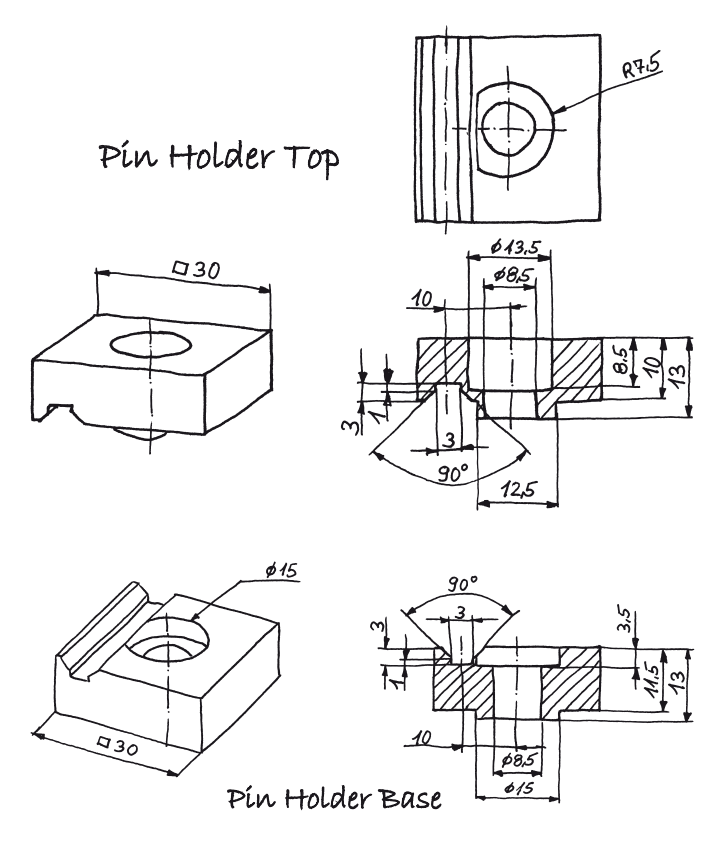

On the following pages, an example part is used to illustrate the steps that are necessary to complete this task.

- The design task for the components *Pin Holder Base* and *Pin Holder Top* can be effectively performed by first completing the example.
- This lesson should be approached by using the same six steps outlined in Lesson 1.

Notes

Chapter 3

Creating Like Parts using Configurations

Notes

Example: Prism

All the necessary steps and information to complete the design task are provided when creating the example parts *Prism*.

The upper prism has two counterbores with a keyway feature on the bottom and the lower prism has only one counterbore with a fitting key feature on the bottom.

Since the two parts are very similar, you should create two configurations of the prism: one with a keyway and another with a fitting key.

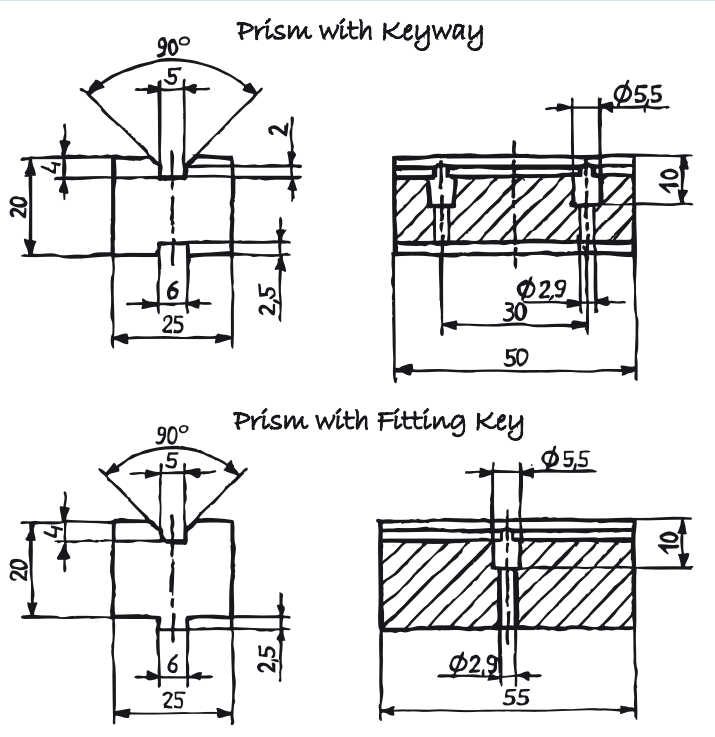

- Work through this example and then you can complete the design task.

An enlarged view of the hand sketch can be found in the Appendix.

3.1 Creating the First Configuration

Create the two prism variations and then generate the associated 2D drawings for production.

- Start with a new document. Click the *New* command in the Standard toolbar and then open a new part. Immediately save the file with the *Save As...* command and name it *Prism*.

- Click the *Front Plane* and then open a new sketch from the appearing context toolbar.

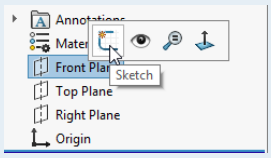

- Create the sketch shown on the right and dimension it.

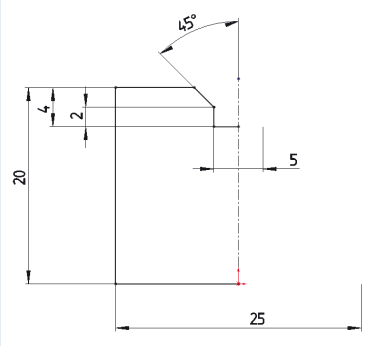

When dimensioning a Ø (diameter) or, in this case, a line with centerline, the entire width can be automatically defined by dragging the dimension over the centerline. It is important to make sure that the sketch is fully defined.

- Holding down the LM button, drag and highlight all the sketch entities in the Graphics Area. Then in the CommandManager, choose *Mirror Entities*. The drawn entities will be mirrored about the centerline.

In a sketch where only one centerline is present, the entities are automatically mirrored about that centerline.

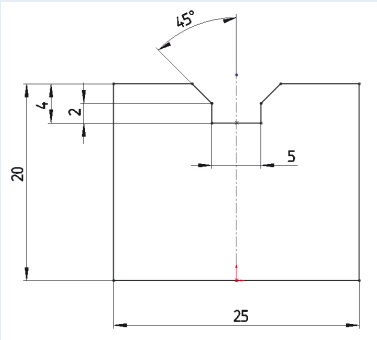

Notes

Notes

- In the CommandManager, click the *Features* toolbar and then choose the *Extruded Boss/Base* tool.

- Extrude the geometry by 50 mm (2 in). Under Direction 1, choose the *Mid Plane* condition from the drop-down menu.

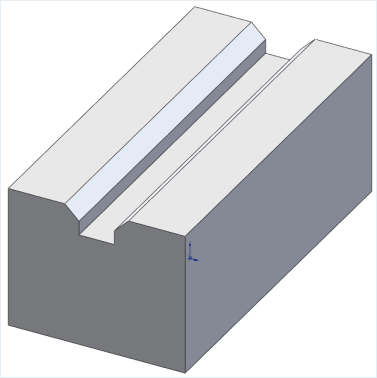

The extrusion is made 25 mm (1 in) in both directions.

T!P When the need to mirror subsequent features about the sketch plane occurs, the Mid Plane condition is preferred.

- Click *OK*.

- Pick on the front surface of the prism and open a new sketch from the appearing context toolbar.

- Sketch the keyway according to the provided hand sketch.

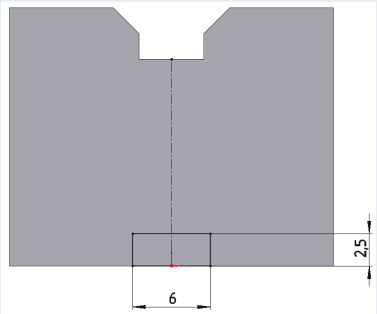

By adding relations, you need only two dimensions in order to fully define the sketch.



- In the CommandManager, click the *Features* toolbar and then choose *Extruded Cut*.

- For Direction 1, specify an end condition of *Through All*.

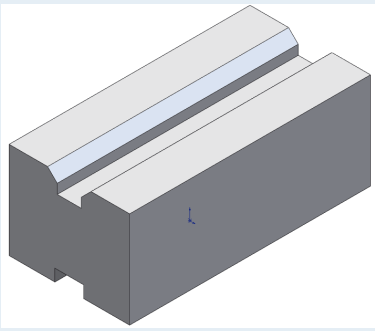

- Click *OK*.

You could have included the keyway in the first sketch. However, when making configurations of like parts, it is much better to create unlike features as separate features.

- Pick on one of the top narrow surfaces and select *Normal To*.

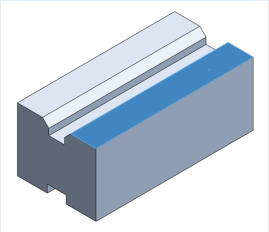

- In the Features toolbar, choose *Hole Wizard* and then specify the values as indicated on the hand sketch.

- Switch to the *Positions* tab and then press the *Esc* key once.

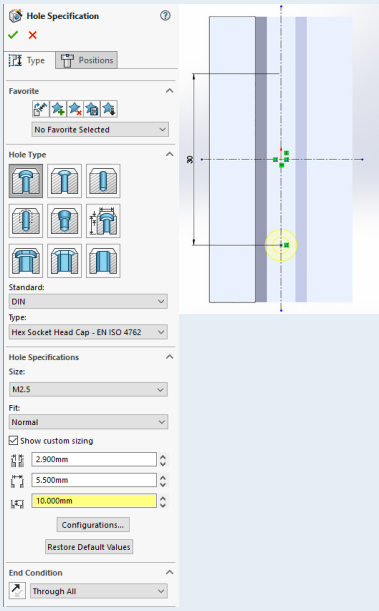

- Sketch the centerlines and then, using the *Point* tool, place the hole along the vertical centerline as shown.

- Dimension the hole position as specified. Pick on the center point of the hole and the horizontal centerline and then move your cursor beyond the centerline.

- Click *OK*.

The counterbore must now be mirrored about the Front Plane.

- In the CommandManager, choose *Mirror* from the Features toolbar.

- Using the flyout FeatureManager Design Tree, select the *Front Plane* and the counterbore feature as shown to fill in the required PropertyManager data.

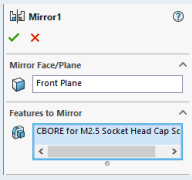

The flyout FeatureManager Design Tree is automatically shown in the Graphics Area when the PropertyManager is active. To expand it, click the arrow symbol next to the document name.

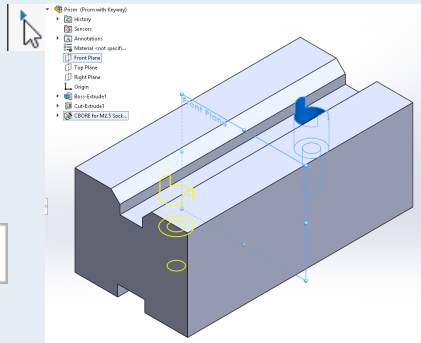

- Click *OK*.

The counterbore is mirrored.

The first configuration *Prism with Keyway* is completed.

Notes

Notes

3.2 Creating the Second Configuration

Add the second configuration *Prism with Fitting Key*.

- Click the *ConfigurationManager* tab at the top of the Manager Pane.

The ConfigurationManager appears as shown on the right.

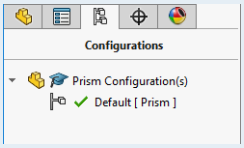

- To change the name, click twice slowly on *Default [Prism]*. Type *Prism with Keyway* and then press the *Enter* key.

Another configuration is needed for the *Prism with Fitting Key*.

- With the RM button, click *Prism Configuration(s)* and then choose the *Add Configuration...* command.

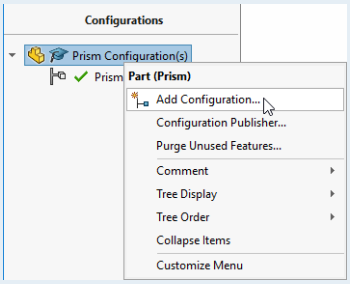

- Enter *Prism with Fitting Key* for the Configuration name.

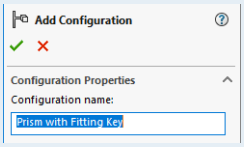

- Click *OK*.

SolidWorks has now added the configuration *Prism with Fitting Key*. This configuration will also be made the active configuration.

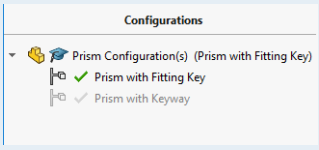

At this time, both configurations are exactly the same.

For the configuration *Prism with Fitting Key*, the length has to be changed. A fitting key feature also has to be added to the bottom. This configuration also has only one counterbore, which is located in the center.

- Click the *FeatureManager* tab to return to the features.

For this configuration, the overall length of the prism must be changed.

- In the FeatureManager, click the feature *Boss-Extrude1* and then choose *Edit Feature*.

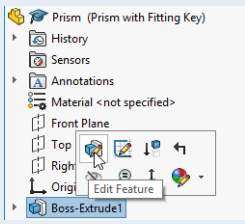

- In the PropertyManager, change the depth measurement according to the hand sketch.

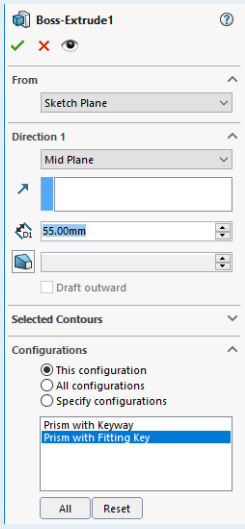

Since the new configuration was added, a Configurations area will now appear in the PropertyManager. This enables you to specify what configurations will be given the changed properties.

- Select the option *This configuration* to apply the dimensional change to only the current configuration.

- Click *OK*.

The keyway on the bottom now has to be replaced with a fitting key. For this feature, the keyway must first be suppressed in this configuration, and the fitting key should then be created.

- Click the feature *Cut-Extrude1* and then choose *Suppress*.

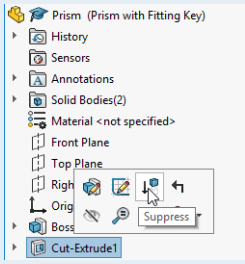

Notes

Notes

- The feature *CBORE for M2.5 Socket Head Cap Screw1* must also be suppressed (the feature *Mirror1* will be suppressed automatically).

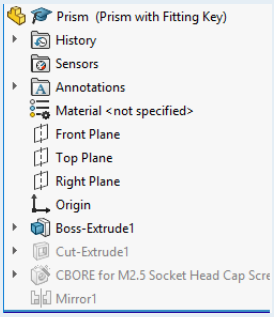

The features will only be suppressed in the active configuration and not the configuration *Prism with Keyway*.

- Pick on the front surface of the prism and choose *Normal To* from the appearing context toolbar.

- Pick on the front surface again and open a new sketch.

- Sketch the fitting key according to the provided hand sketch.

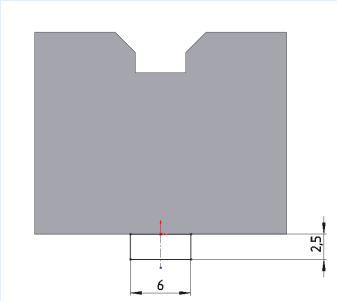

- In the CommandManager, click the *Features* toolbar and then choose *Extruded Boss/Base*.

- For Direction 1, specify an end condition of *Through All*.

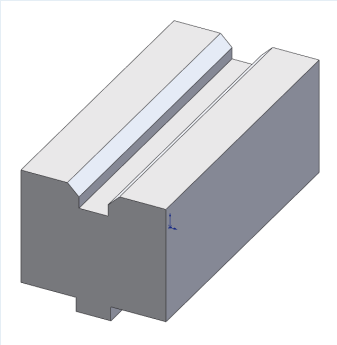

T!P The option of *Merge result* must be enabled.

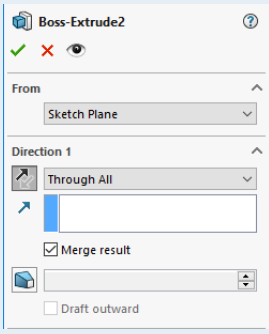

- Click *OK*.

An M2.5 counterbore must now be added to this configuration.

- Pick on one of the top narrow surfaces and select *Normal To*.

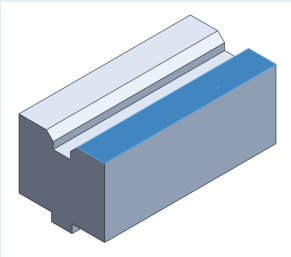

- In the Features toolbar, choose *Hole Wizard* and then specify the values as indicated on the hand sketch.
- Switch to the *Positions* tab

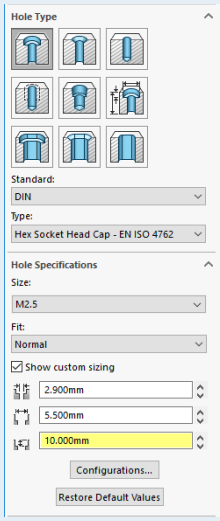

- Place the center point of the hole on the Origin.
- Click *OK*.

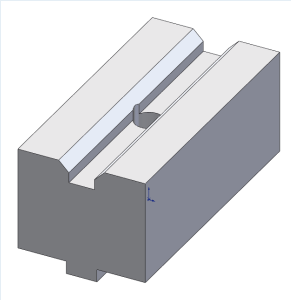

You have created two configurations. In the ConfigurationManager, you can double-click a respective configuration to quickly switch between the two (activating the one configuration while deactivating the other).

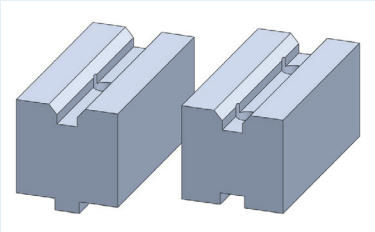

- Save your work and then create the 2D drawings for production.

Both variations of the example part *Prism* are completed.

Notes

Notes

Design Task: Pin Holder

- Now create the components *Pin Holder Base* and *Pin Holder Top* according to the sketch shown on the right.

The steps that are necessary to complete this task were learned during the creation of the Prism.

An enlarged view of the hand sketch can be found in the Appendix.

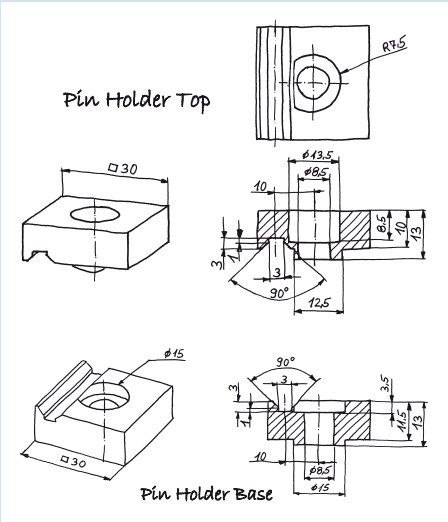

T!P

You can make a new drawing for each configuration after activating it in the ConfigurationManager. The associated views will be displayed in the View Palette.
Otherwise, you can create the first drawing based on one configuration. Once you have completed and saved the drawing with the correct name, you can then reference the other configuration(s) for each of the drawing views in the PropertyManager.

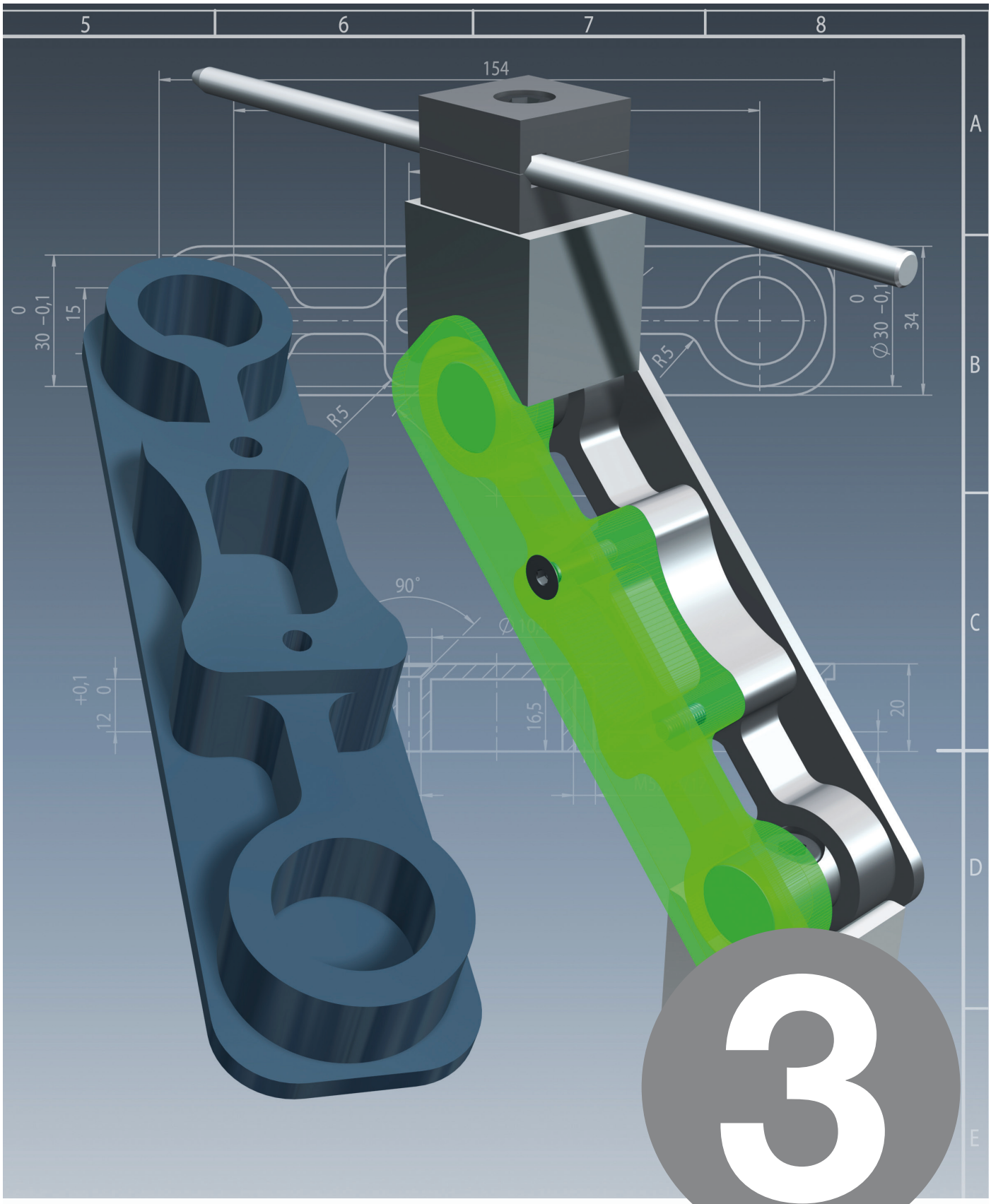

Lesson

Designing the Side Parts

Lesson 3:

Designing the Side Parts

Notes

Create a 3D Part drawing of the component *Side Part* and then generate a 2D drawing for production.

The measurements and features can be taken from the hand sketch on the next page.

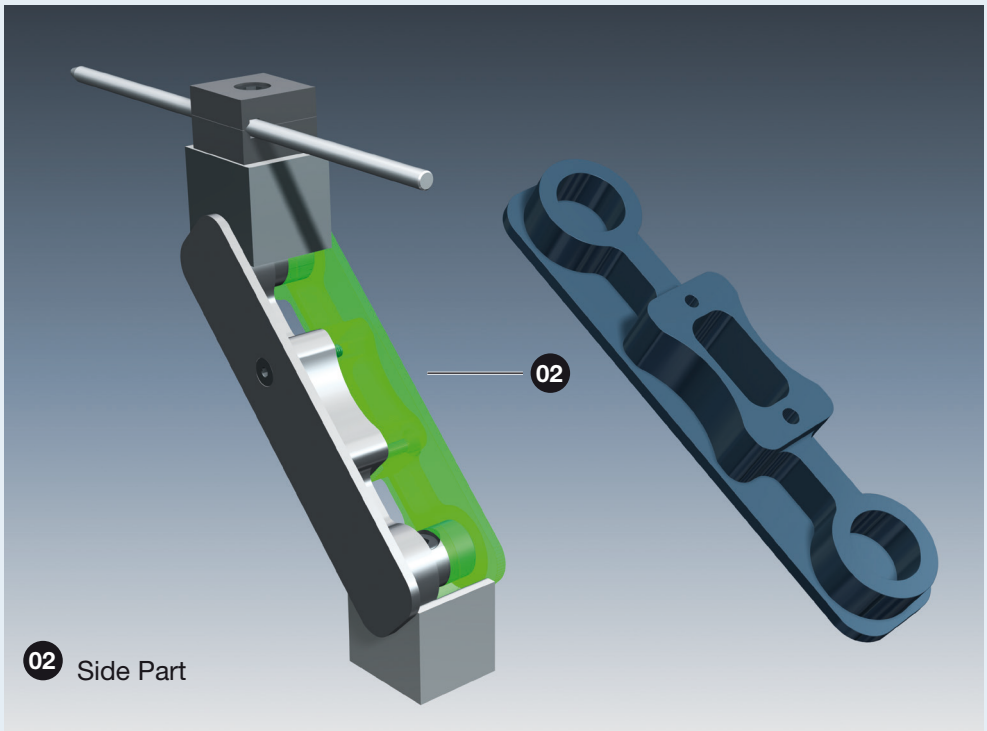

02 Side Part

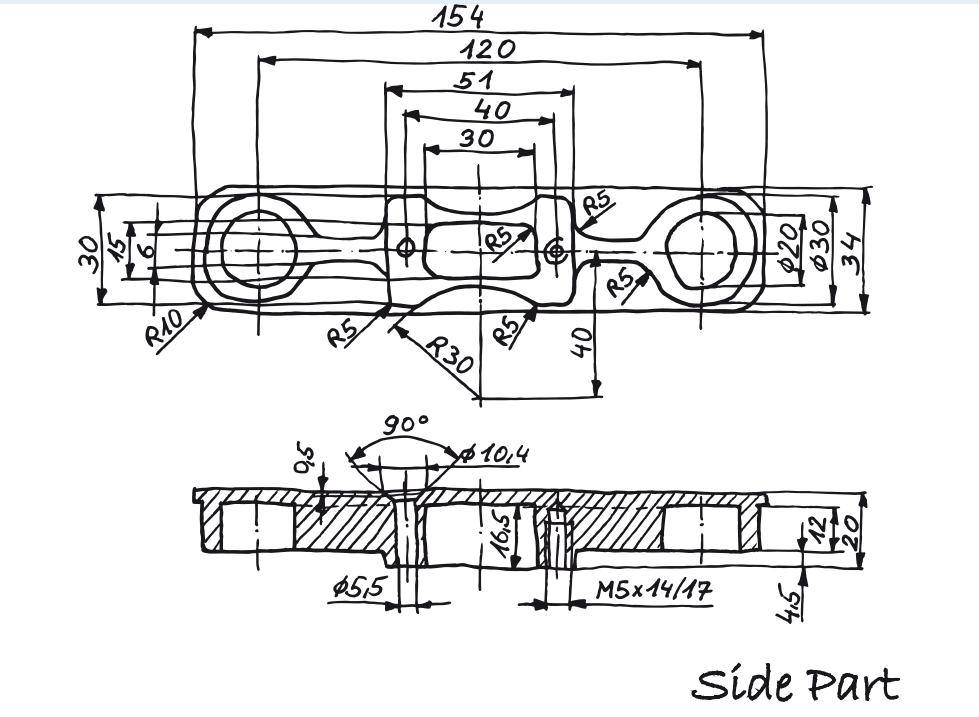

On the following pages, an example part is used to illustrate the steps that are necessary to complete this task.

- The design task for the *Side Part* can be effectively performed by first completing the example.
- This lesson should be approached by using the same six steps outlined in Lesson 1.

Notes

Chapter 4

Creating Symmetric Parts

Notes

Example: Counter Plate

All the necessary steps and information to complete the design task are provided when creating this example part *Counter Plate*.

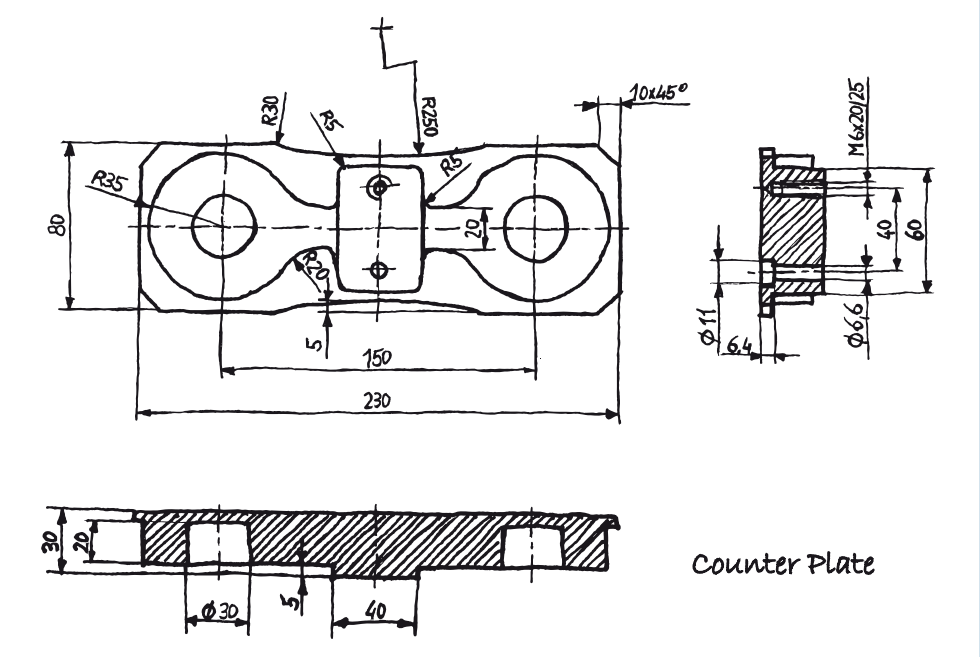

- Work through this example.

An enlarged view of the hand sketch can be found in the Appendix.

Create a 3D Part drawing and then generate a 2D drawing for production.

4.1 Creating the Solid Body

- Open a new part and then immediately save the file with the *Save As...* command and name it *Counter Plate*.

- Click the *Front Plane* and open a new sketch.

- In the CommandManager, choose the *Center Rectangle* tool and then sketch and dimension it.

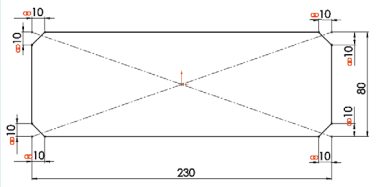

- Select *Sketch Chamfer* from the *Sketch Fillet* flyout tool and then sketch a 10x45° chamfer on the corners as shown.

- In the PropertyManager, select the Chamfer Parameters as shown and enter the distance in the D1 field.

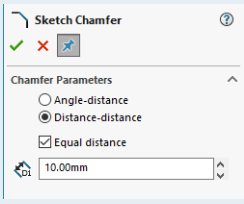

- Pick on the four corners of the rectangle and then click *OK*.

- Switch to the *Features* toolbar in the CommandManager and select *Extruded Boss/Base*. Extrude the geometry by 5 mm (0.2 in).

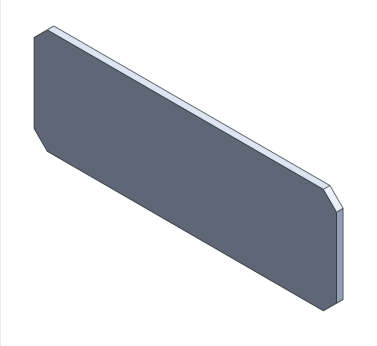

- Click *OK*.

- Open a new sketch on the front surface.

- Create the sketch for the boss features according to the hand sketch. After sketching the centerlines, draw only ¼ of the geometry (line and tangential arcs).

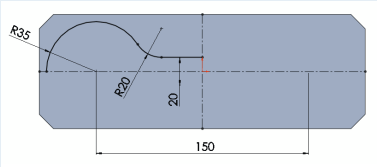

Since this particular feature is symmetric, the remaining sketch geometry can be mirrored.

Notes

Notes

- Holding down the LM button, drag a selection box from left to right across the geometry as shown.

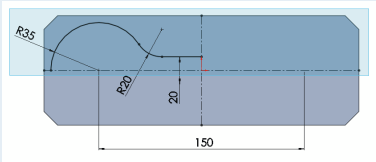

T!P When you make a box from LEFT to RIGHT, only the items that fall within the boundaries are selected. When a box is made from RIGHT to LEFT, items crossing the boundaries are also selected.

- Click the *Mirror Entities* tool.

When a centerline falls within the box, the selected entities are automatically mirrored about that centerline.

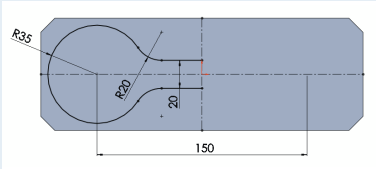

- In a similar way, now mirror the geometry to the right side of the vertical centerline.

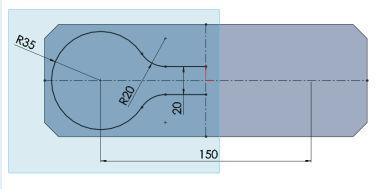

- Switch to the *Features* toolbar in the CommandManager and select *Extruded Boss/Base*.

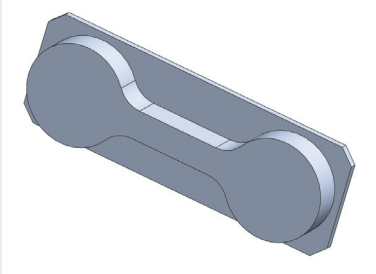

- Extrude the sketch geometry by 20 mm (0.8 in).
- Click *OK*.

- Open a sketch on the front surface of the newly created feature. Create two circles according to the hand sketch, each with a diameter of 30 mm (1.2 in).

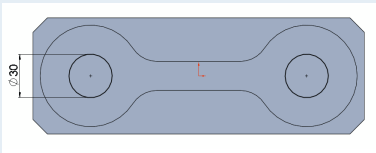

- Add the Sketch Relation *Equal* to the two circles. This will require only one circle to be dimensioned in order to fully define the sketch.

When you want to create a circle or arc that must be concentric with another circle or arc, place the mouse over the edge of the existing entity as shown. SolidWorks will display the center point, which can then be used for positioning. The Sketch Relation *Coincident* is automatically added.

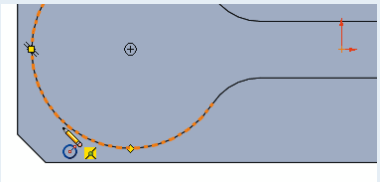

- Switch to the *Features* toolbar in the CommandManager and select *Extruded Cut*.

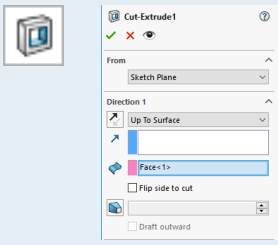

- For Direction 1, choose *Up To Surface* from the End Condition drop-down menu. Pick on the front surface of the main body as shown.

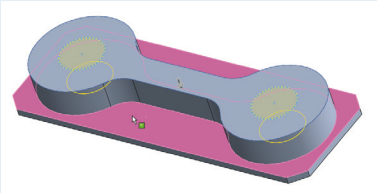

- Click *OK*.

- Open a new sketch on the front surface of the base feature. Create the sketch for the center feature.

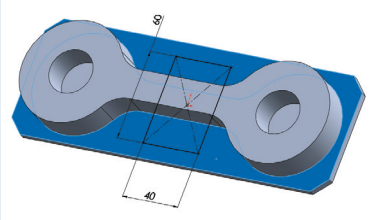

- Switch to the *Features* toolbar in the CommandManager and select *Extruded Boss/Base*.

This sketch geometry can be extruded with the option *Offset From Surface*.

- Under Direction 1, choose *Offset From Surface* and then pick on the uppermost surface as shown.

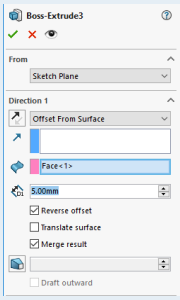

- Enter a 5 mm (0.2 in) offset in the D1 field. The *Reverse offset* check box must also be enabled.

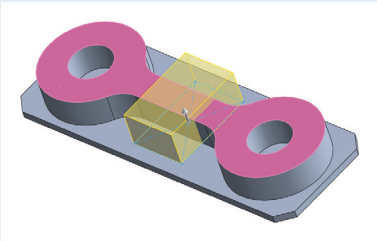

- Click *OK*.

Notes

Notes

- Select the *Fillet* tool and then round the inside and outside corners with a radius of 5 mm (0.2 in) as shown.

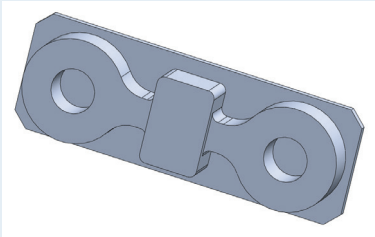

- According to the hand sketch, create the counterbore and threaded hole using the *Hole Wizard*.

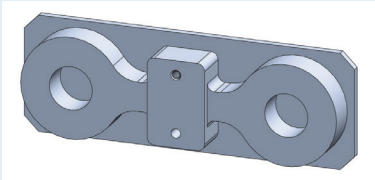

You will notice that the two radii, R250 mm (10 in) and R30 mm (1.2 in), along the outside edges of the base feature are missing.

- Open a new sketch on the front surface of the base feature.

- Sketch a *Centerpoint Arc*. Align the center vertically with the Origin and place the endpoints coincident with the body edge.

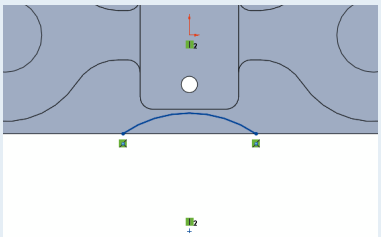

- Sketch a *Line* to connect the endpoints of the arc. The line can be fully defined by making it collinear to the body edge.

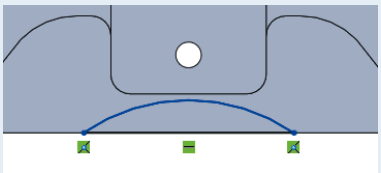

- Dimension the arc 5 mm (0.2 in) from the line as shown.

- First pick on the line and then, holding down the *Shift* key, pick on the arc.

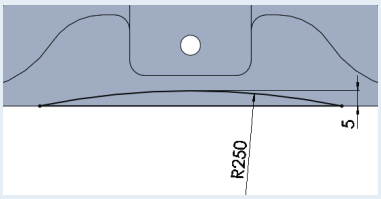

SolidWorks creates the dimension as shown to the right.

- Define the arc with a dimension of R250 mm (10 in).
- Sketch a centerline and then mirror the geometry.

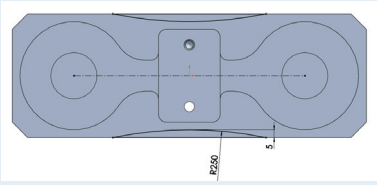

Another possibility is to sketch a circle with Ø500 mm (20 in), align the center to the Origin, correctly dimension it and then mirror the geometry.

- Switch to the *Features* toolbar in the CommandManager and select *Extruded Cut*.

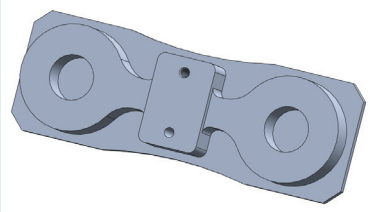

- For Direction 1, choose *Through All*.
- Click *OK*.

- Fillet the edges with R30 mm (1.2 in) according to the hand sketch.

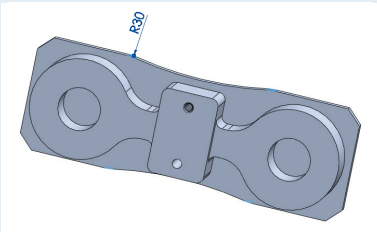

- Save your work and then create the 2D drawing for production.

The example part *Counter Plate* is completed.

Notes

Notes

4.2 Creating the Drawing

Practice creating a 2D drawing for the example part *Counter Plate*.

- Verify that the front view of the part will match your desired front view in the drawing.

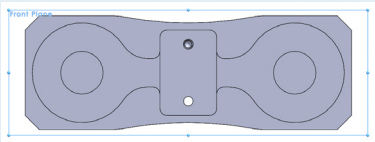

The front view of the 3D part will be the front view in the drawing.

- If the views do not match, follow the steps outlined in Chapter 2.2 (when the drawing for the example part *Hinge Block* was created).

- In the Standard toolbar, click the *New* flyout tool and choose *Make Drawing from Part/Assembly*.

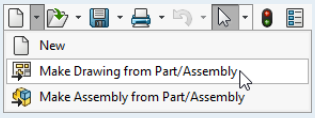

- When the Sheet Format/Size dialog box is displayed, browse for the provided Sheet Formats.

- From the Open dialog box, open the Sheet Format *DIN A3 ISO 7200 VDW*.

- Click *OK*.

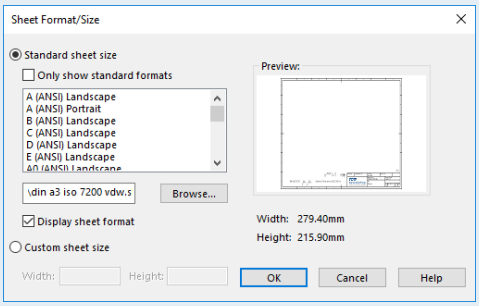

- To change the sheet scale, RM click on the sheet, expand the menu and then select *Properties...*

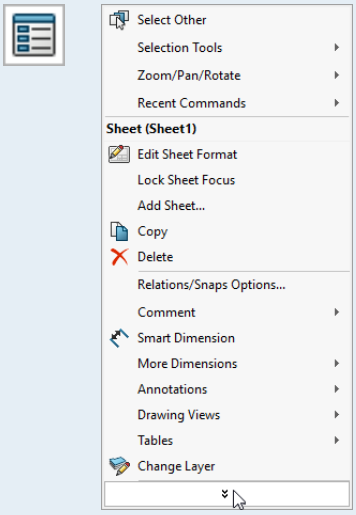

Course_Materials
EDU Templates

- Make sure that the values of Scale are 1:2 in the Sheet Properties dialog box and then click *Apply Changes*.

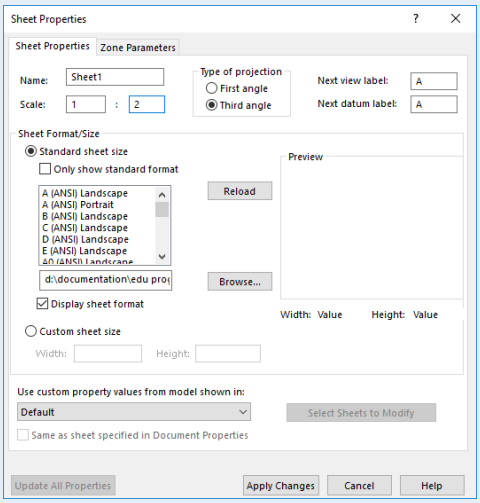

- In the View Palette, click and hold the *Front* view and then move the cursor into the Graphics Area (Drag and Drop).

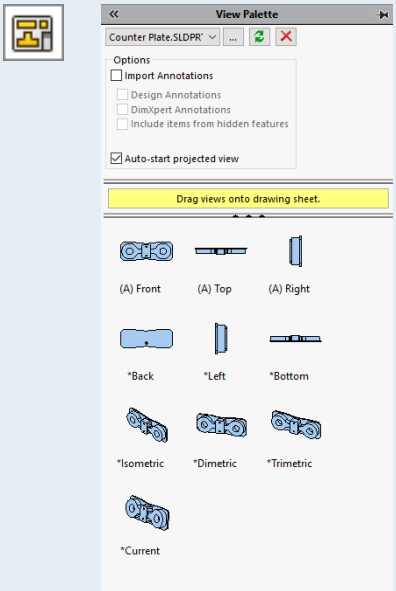

- Drop the view onto the drawing sheet by releasing the LM.

- Move the cursor around in different directions.

- Insert the *Top* view and then insert the *Isometric* view by moving the cursor and clicking the drawing sheet accordingly.

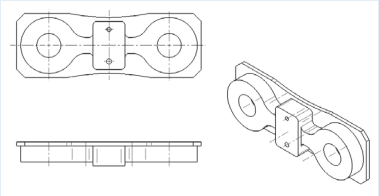

Centerlines and center marks are automatically added (if enabled in the Document Properties) to the views.

- Extend the center mark lines.

The isometric view can be freely moved about the drawing.

Notes

Notes

In this exercise, both a sectional side and top view should be shown.

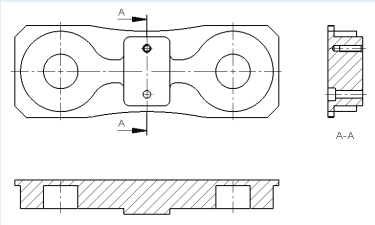

A Section View (without offset) is created in two different ways. For the first method, a *Line* (sketch entity) is drawn manually and the *Section View* tool is used to create a sectional side view. For the second method, the *Broken-out Section* tool is used to create a sectional top view. Both tools can be found in the View Layout toolbar of the CommandManager.

Creating a Sectional Side View by Sketching a Section Line

- Sketch a *Line* that passes vertically through the center of the front view.

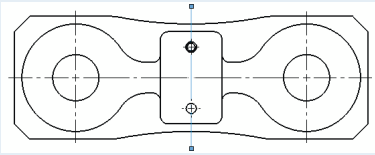

- The line must then be selected.
- In the CommandManager, click the *View Layout* toolbar and choose *Section View*.

- Click the *Flip Direction* button in the PropertyManager.
- Position the Section View onto the drawing sheet as shown.

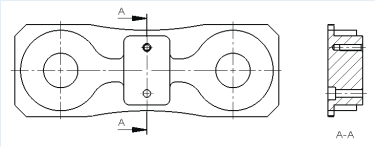

Creating a Sectional Top View with the Broken-out Section Tool

- Sketch a rectangle over the top view, making the sides collinear with the outer edges of the part.

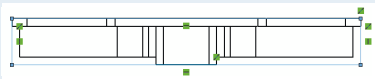

- In the CommandManager, click the *View Layout* toolbar and choose *Broken-out Section*.

- Enable the *Preview* check box and then pick on a circle or arc in the front view.

SolidWorks positions the broken-out section directly through the center of the Counter Plate.

- Click *OK*.

The sectional top view is generated.

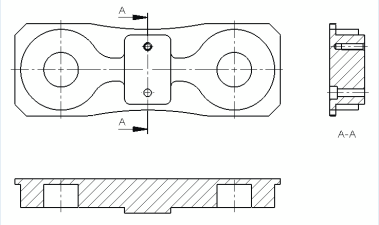

The drawing must be dimensioned.

- Use the *Smart Dimension* tool to dimension the drawing as shown.

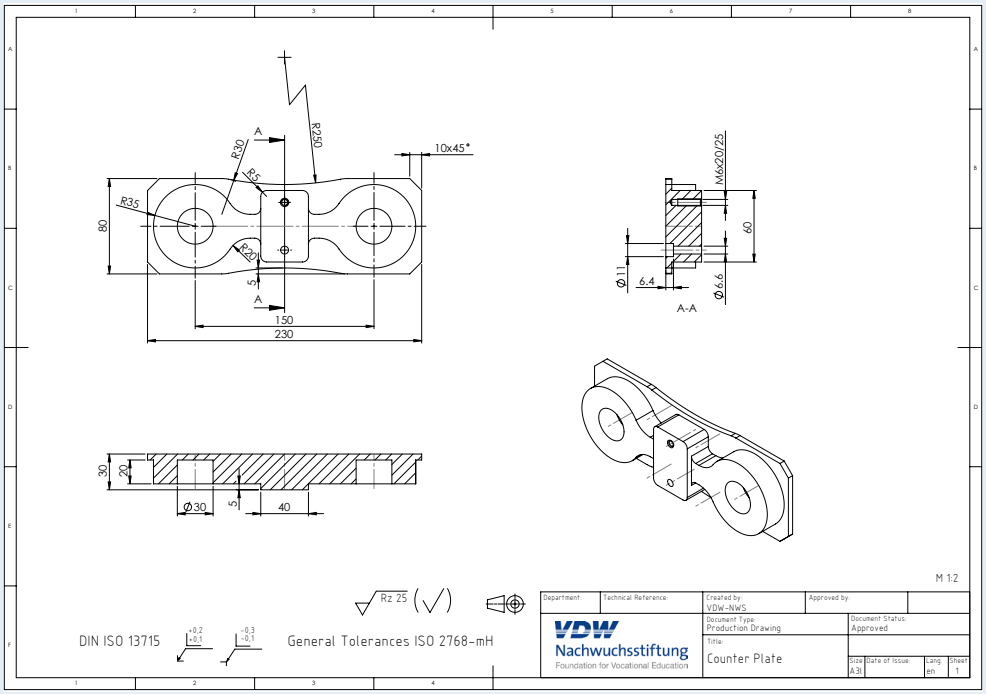

Notes

Notes

Design Task: Side Parts

- Now create the component *Side Part* according to the sketch shown on the right.

The steps necessary to complete this task were learned during the creation of the Counter Plate.

An enlarged view of the hand sketch can be found in the Appendix.

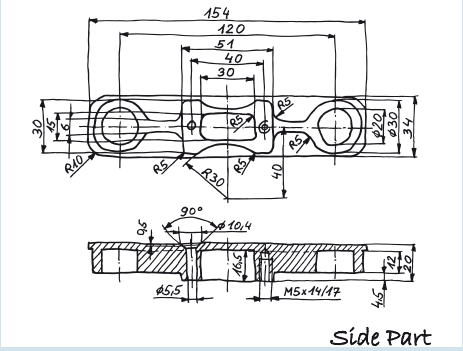

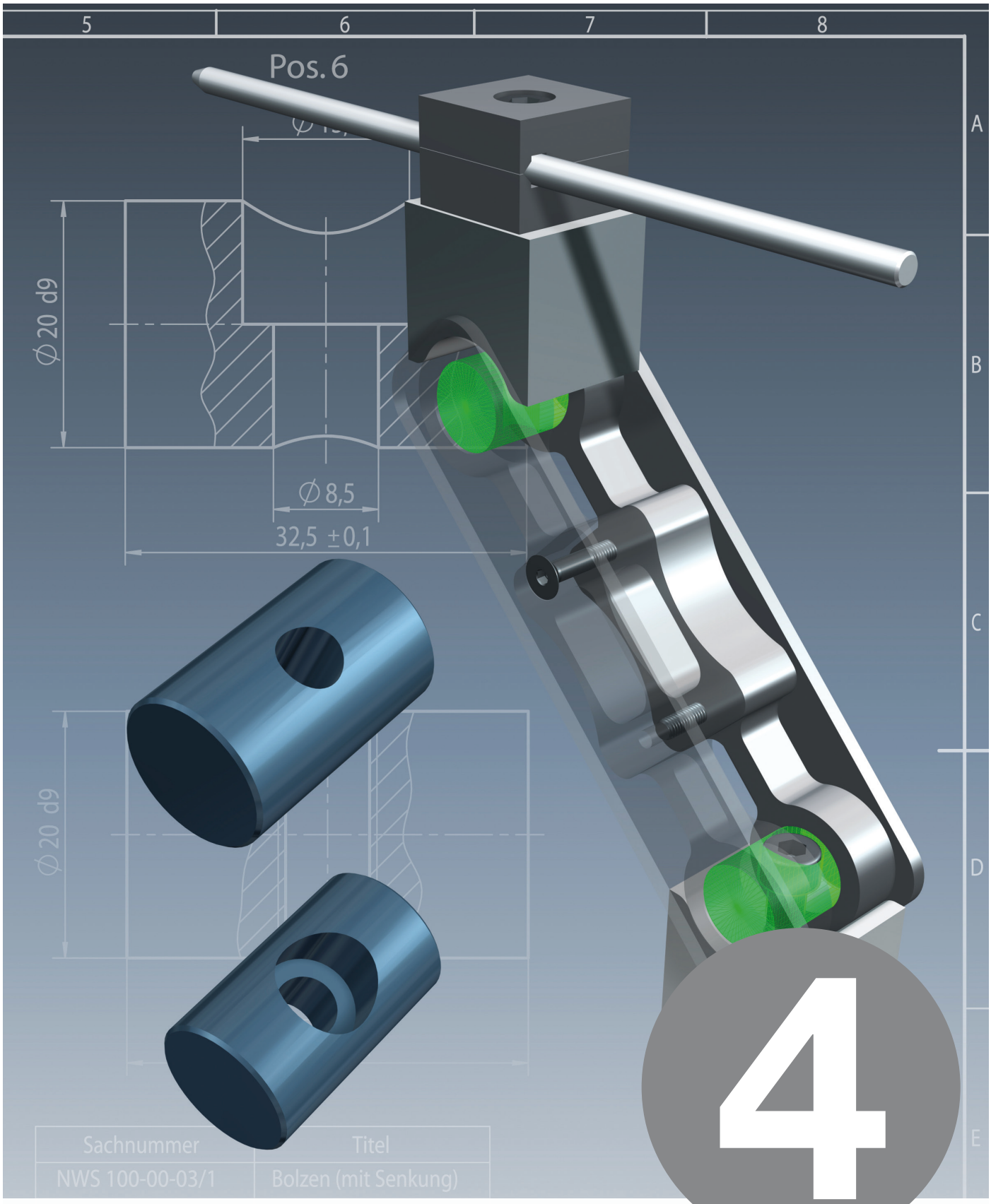

Lesson

Designing the Studs

Lesson 4:

Designing the Studs

Notes

Create a 3D Part drawing for the two variations of the component *Stud* and generate a 2D drawing for production.

The measurements and features can be taken from the hand sketch on the next page.

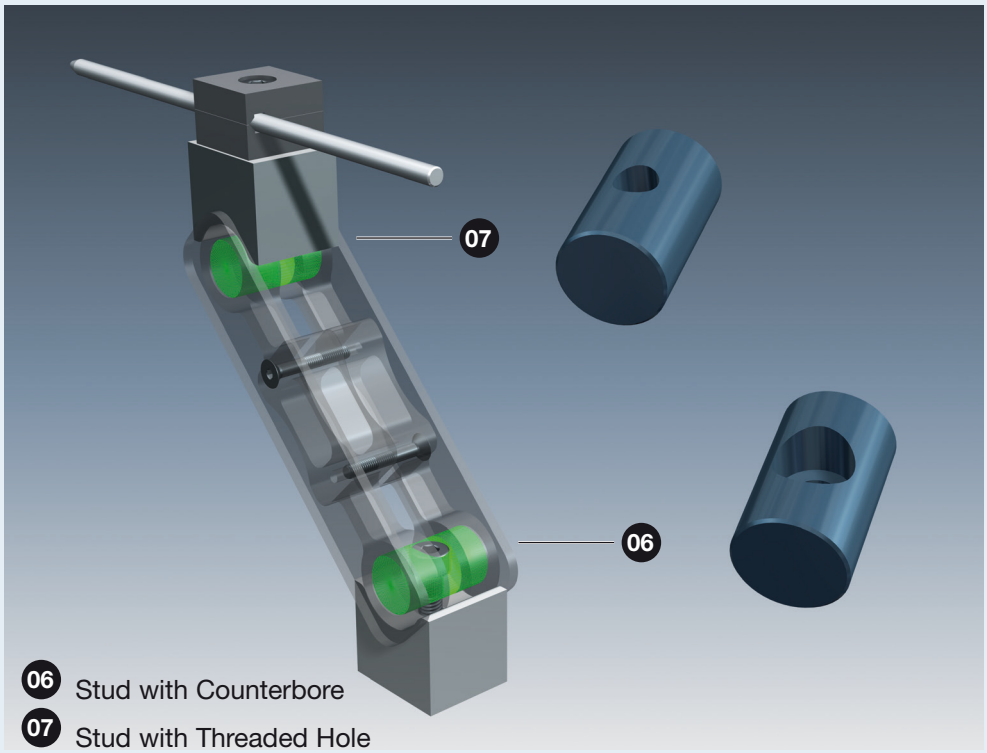

The Studs consist of two similar parts. Both parts are made up of the same basic cylindrical body but with differentiating features: one with a counterbore and another with a threaded hole.

In this exercise, you should therefore use configurations to create the components *Stud with Counterbore* and *Stud with Threaded Hole*.

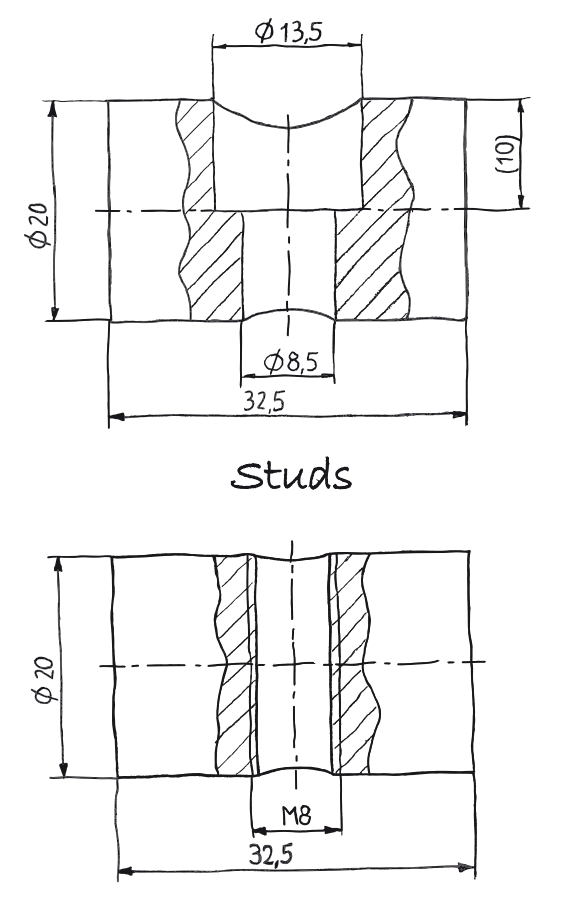

On the following pages, an example part is used to illustrate the steps that are necessary to complete this task.

- The design task for the two variations of the component *Stud* can be effectively performed by first completing the example.
- This lesson should be approached by using the same six steps outlined in Lesson 1.

Notes

Chapter 5

Creating Round Parts with Circumferential Features

Notes

Example: Hexagonal Spanner

All the necessary steps and information to complete the design task are provided when creating the example parts *Hexagonal Spanner*. Since the two parts are very similar, you should create two configurations of the hexagonal spanner: one with a hole and another with a threaded hole.

- Work through this example.

An enlarged view of the hand sketch can be found in the Appendix.

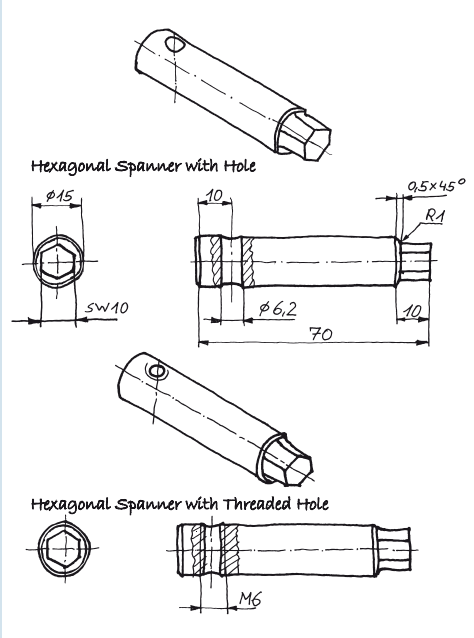

Create the two hexagonal spanners and then generate the associated 2D drawings for production.

5.1 Creating the Basic Part

- Open a new part.

- Immediately save the file with the *Save As...* command and name it *Hexagonal Spanner*.

- Click the *Right Plane* and open a new sketch from the appearing context toolbar.

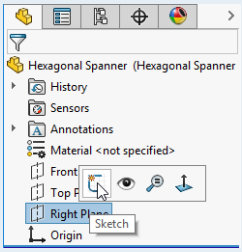

- In the CommandManager, select the *Circle* tool.

- On the Origin, sketch a circle and then define it with a Ø15 mm (0.6 in) dimension as shown.

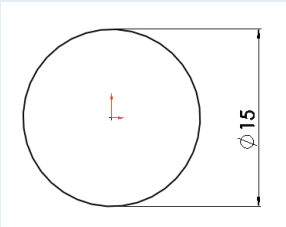

- Switch to the *Features* toolbar in the CommandManager and select *Extruded Boss/Base*.

- Choose the condition and then extrude the geometry by 60 mm (2.4 in).

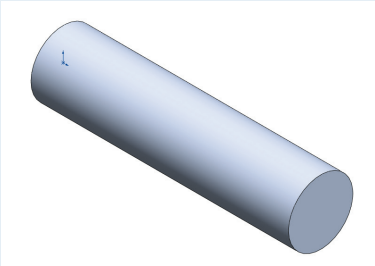

- Click *OK*.

5.2 Adding a Hole

- Open a new sketch on the *Front Plane*. Align the view with the sketch plane using *Normal To*.

- Sketch a *Point*, so that it is coincident to the outer diameter, and then dimension it accordingly.

- Exit the sketch.

T!P A safe method for creating a circumferential feature (e.g., hole) on round parts is to first sketch a *Point*, which will be used to define its exact position. Then using the *Hole Wizard*, place a hole arbitrarily on the surface and then make the center point *Coincident* with the sketched point.

- Change to the *Isometric* view.

Notes

Notes

- In the Graphics Area, click a location that is close to the sketched point.
- Using the *Hole Wizard*, create a Ø6.2 mm (0.25 in) *Hole* with the End Condition *Through All*.

- Switch to the *Positions* tab.
- Place the center point of the hole on the surface near the previously sketched point and then press the *Esc* key.

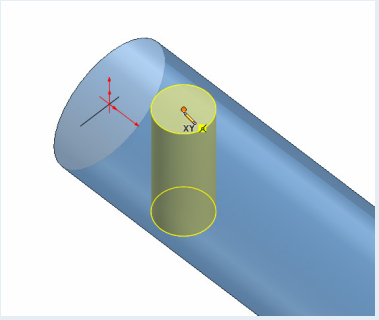

- While holding down the *Ctrl* key, select the sketched point.

- Make the two points *Coincident*.
- Click *OK* twice, once to confirm the added relation and again to exit the Hole Wizard dialog box.

The hole is created.

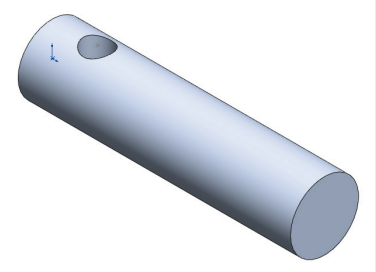

VDW Nachwuchsstiftung
Foundation for Vocational Education

5.3 Creating a Polygon

- Click on the right surface, open a new sketch and create a hexagon.

- Use the *Polygon* tool. In the PropertyManager, enter *6* for the Number of Sides. From the Origin, draw a hexagon with an inscribed circle diameter of 10 mm (0.4 in), equivalent to the SW dimension in the hand sketch.

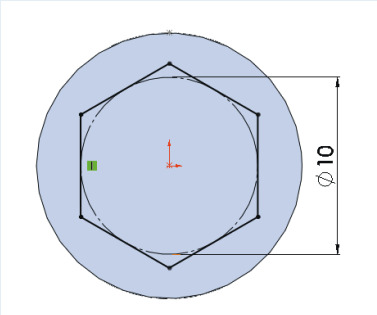

- In order to fully define the sketch, add the Sketch Relation *Vertical* to one side.

With SolidWorks, you can create polygons that have 3-40 sides. After a polygon is sketched and dimensioned, you can still change its Number of Sides. To do so, first pick on an edge and then, in the Menu Bar, click *Tools > Sketch Tools > Edit Polygon...*

- Exit the sketch and extrude the polygon by 10 mm (0.4 in).

- Fillet the inner edges of the polygon and chamfer the base feature according to the hand sketch.

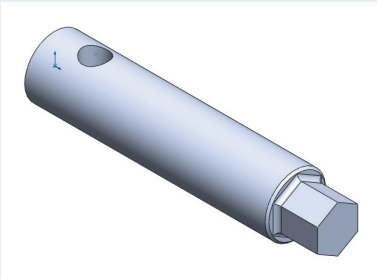

- Now create a configuration for the *Hexagonal Spanner with Threaded Hole*.

- Follow the procedure outlined in Lesson 2 for creating like parts using configurations.

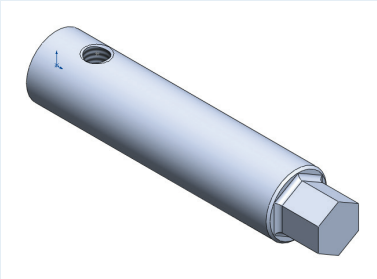

- Save your work and then create the 2D drawings for production.

Both variations of the example part *Hexagonal Spanner* are completed.

Notes

Notes

Design Task: Studs

- Now create the components *Stud with Counterbore* and *Stud with Threaded Hole* according to the sketch shown on the right.

The steps necessary to complete this task were learned during the creation of the Hexagonal Spanners.

An enlarged view of the hand sketch can be found in the Appendix.

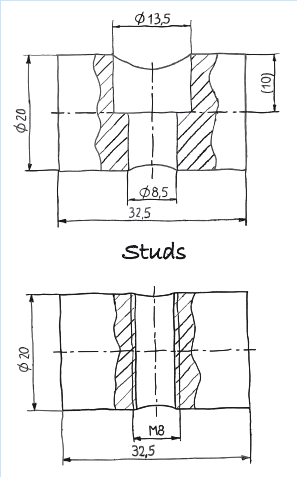

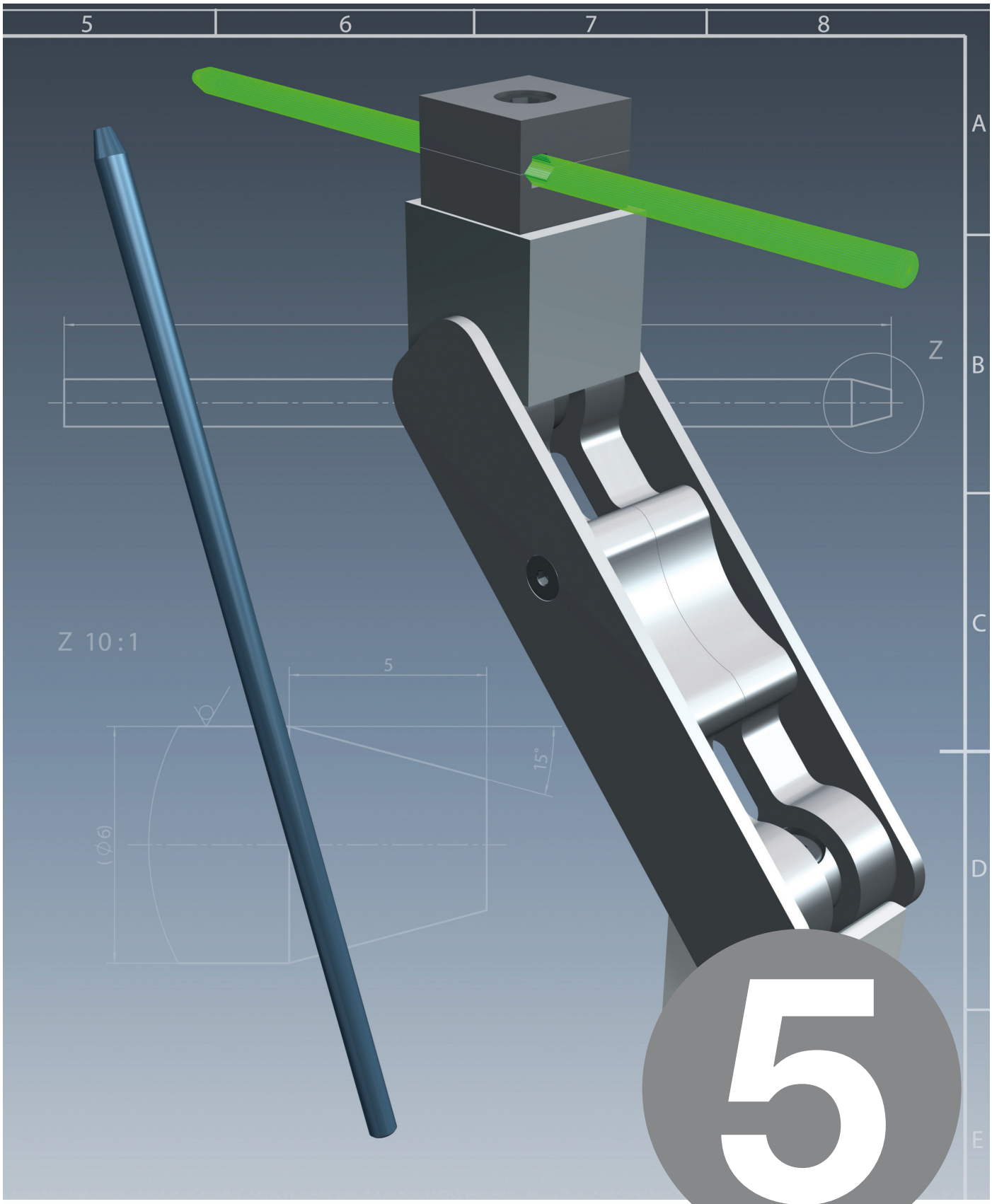

Lesson

Designing the Stop Pin

Lesson 5:

Designing the Stop Pin

Notes

Create a 3D Part drawing of the component *Stop Pin* and generate a 2D drawing for production.

The measurements and features can be taken from the hand sketch on the next page.

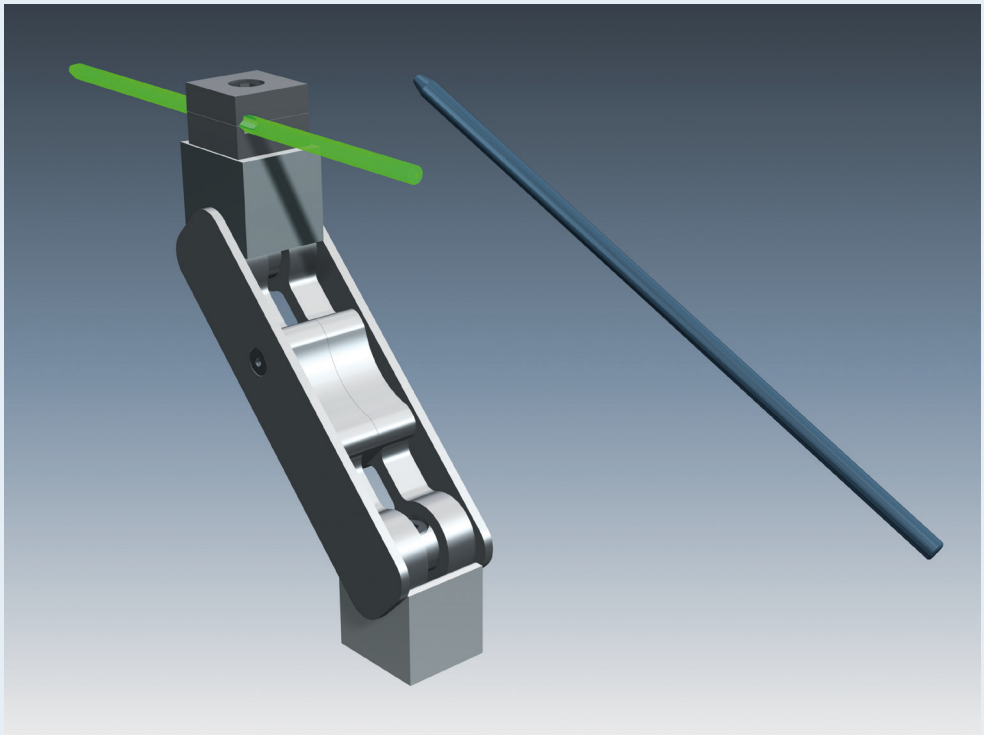

There are several ways in which this part can be created. For the purpose of this exercise, the Revolved Boss/Base feature will be used.

With the Revolved Boss/Base feature, a sketch is created that contains one or more profiles and a centerline, line, or edge to be used as the axis around which the feature revolves.

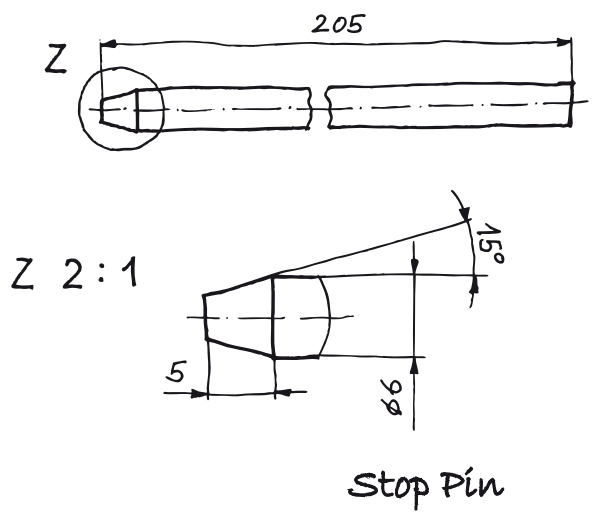

On the following pages, an example part is used to illustrate the steps that are necessary to complete this task.

- The design task for the *Stop Pin* can be effectively performed by first completing the example.

Notes

Chapter 6

Creating a Part with Rotational Symmetry

Notes

Example: Center Punch

All the necessary steps and information to complete the design task are provided when creating this example part *Center Punch*.

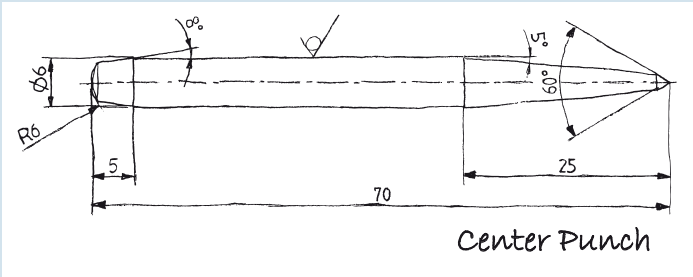

- Work through this example.

An enlarged view of the hand sketch can be found in the Appendix.

Create the center punch using the Revolved Boss/Base feature.

6.1 Creating a Body with the Revolved Boss/Base Feature

- Open a new part.
- Immediately save the file with the *Save As...* command and name it *Center Punch*.
- Click the *Front Plane*, open a new sketch and then draw a centerline that is coincident with the Origin.
- Sketch the geometry adjacent to the centerline as shown.

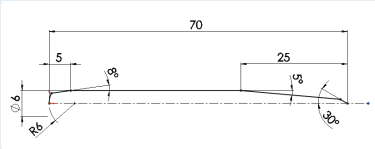

When dimensioning a Ø with a centerline, the whole diameter can be automatically defined by clicking the dimension and dragging it passed the centerline. It is important to make sure that the sketch is fully defined.

- After selecting *Sketch1* in the FeatureManager Design Tree, click the *Revolved Boss/Base* tool on the Features toolbar.

Since the geometry is currently open, you are asked if you would like the sketch to be automatically closed. A non-thin revolution feature requires a closed sketch.

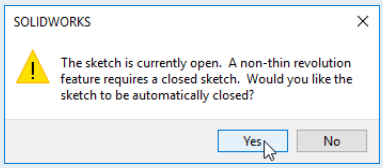

- Click *Yes*. Otherwise, a Thin Feature (hollow body) will be created.

- Click *OK*.

If only one centerline is present in a sketch, SolidWorks automatically revolves the geometry about that centerline. When several centerlines are present, one must be selected.

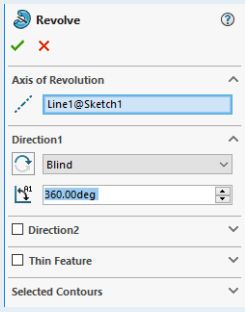

- Save your work and then create the 2D drawing for production.

The example part *Center Punch* is completed.

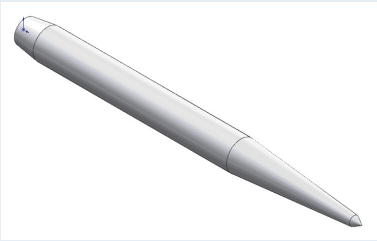

Notes

Notes

Design Task: Stop Pin

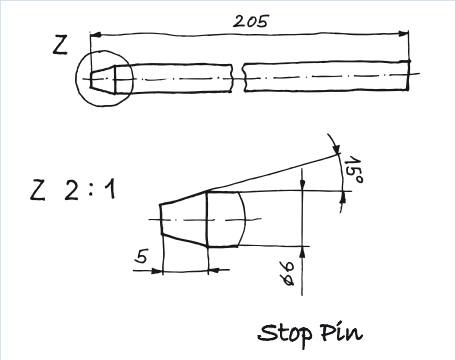

- Now create the component *Stop Pin* according to the sketch shown on the right.

The steps necessary to complete this task were learned during the creation of the Center Punch.

An enlarged view of the hand sketch can be found in the Appendix.

All components of the Workpiece Stop are now created. The Assembly will be created by loading the components from the SolidWorks Toolbox.

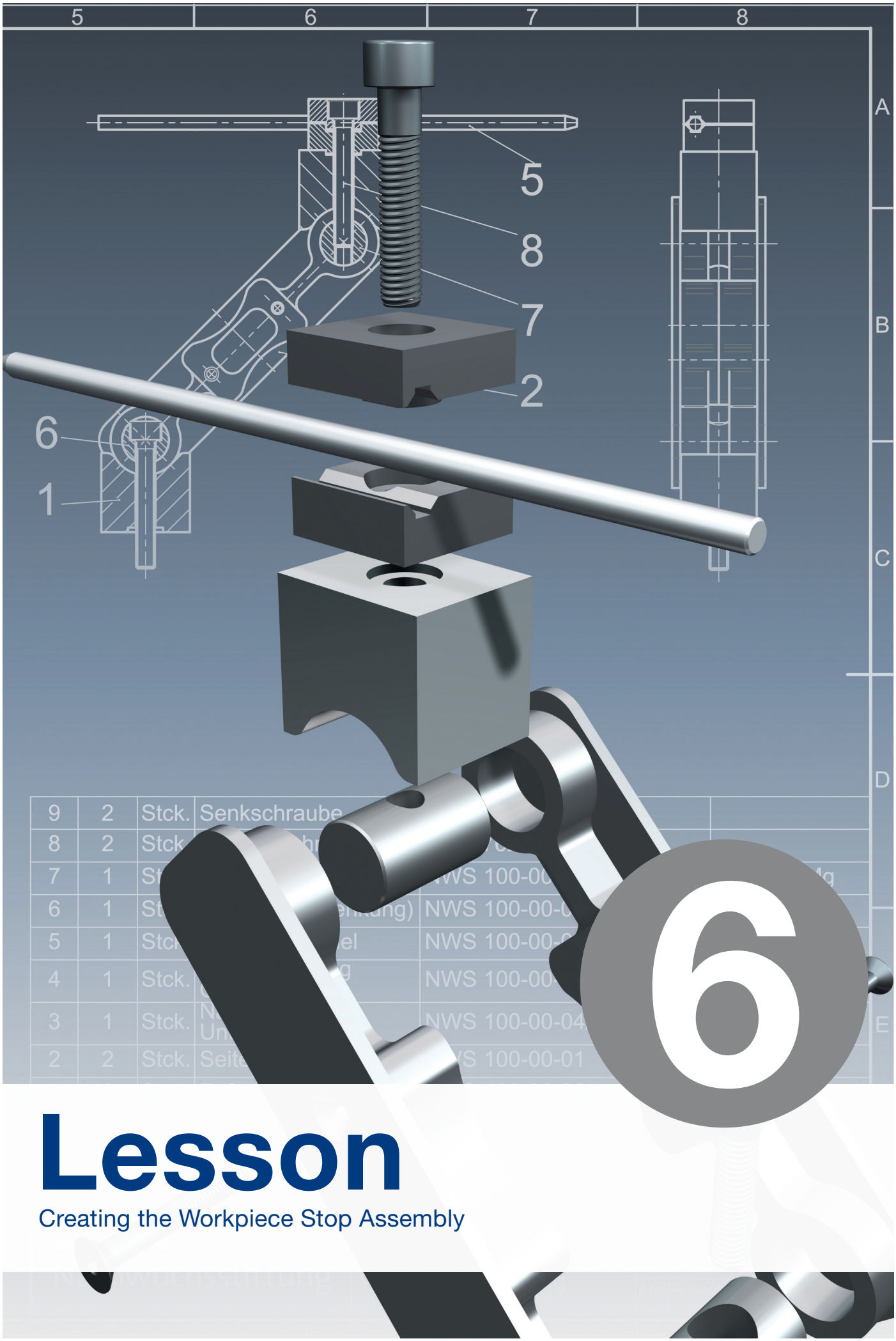

Lesson

Creating the Workpiece Stop Assembly

Lesson 6:

Creating the Workpiece Stop Assembly

Notes

Create an assembly consisting of the Workpiece Stop components.

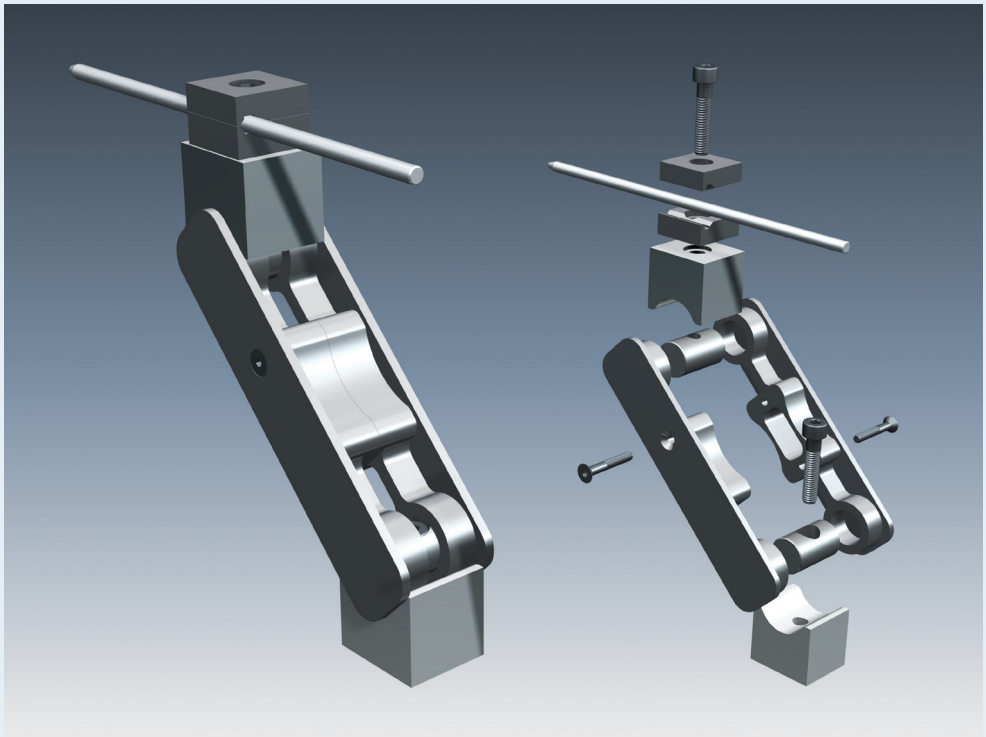

Working with assemblies in SolidWorks is a convenient way to create simple and complex systems consisting of many parts and subassemblies.

When assembling the Workpiece Stop components, you will become familiar with the basic design method of creating an assembly from previously constructed parts (Bottom-up Design).

On the following pages, an example assembly is used to illustrate the steps necessary to complete this task.

- The assembly task for the *Workpiece Stop* can be effectively performed by first completing the example.

Notes

Chapter 7

Working with Assemblies

Notes

Course_Materials
Part files > Puller

Example: Puller

All the necessary steps and information to complete the assembly task are provided when creating this example assembly *Puller*.

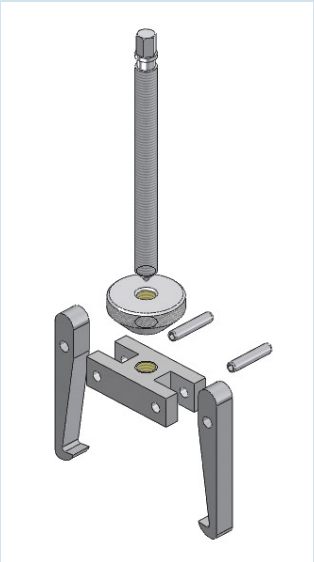

- Work through this example.

The puller components are provided. They can be found in the Course_Materials folder.

Create an assembly consisting of the Puller components. Assign functional tolerances to the assembly and create a standardized drawing with integrated bill of materials (BOM).

7.1 The Concept of Assemblies

You can build complex assemblies consisting of many components, which can be parts or other assemblies, called subassemblies.

For most operations, the behavior of components is the same for both types. Adding a component to an assembly creates a link between the assembly and the component. When SolidWorks opens the assembly, it finds the component file to show it in the assembly. Changes in the component are automatically reflected in the assembly.

SolidWorks assemblies use the *.SLDASM file extension.

7.2 The Work Environment

This is a typical Assembly window:

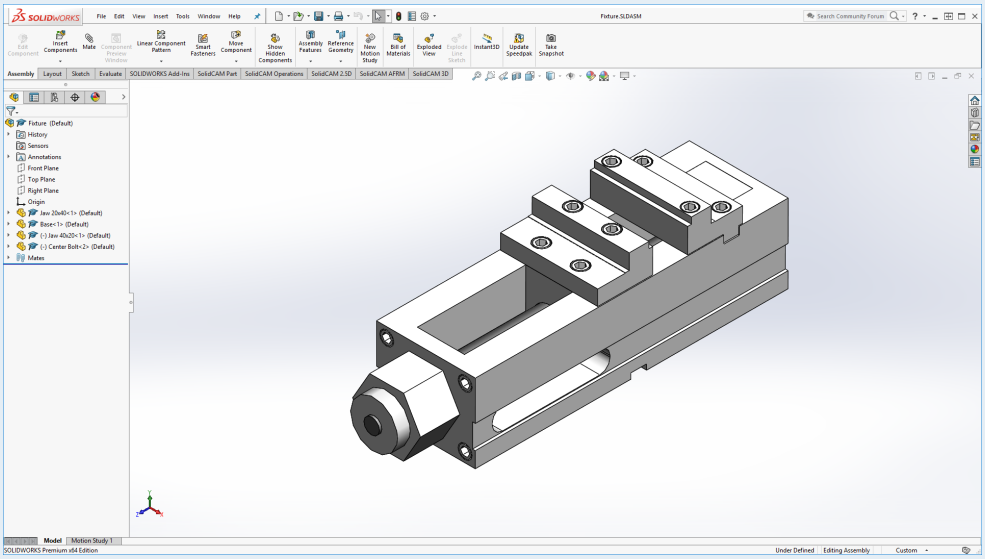

For assemblies, the following items are displayed in the FeatureManager Design Tree:

- Top-level assembly (the first item)
- Various folders, for example, Annotations and Mates
- Assembly planes and origin
- Components (subassemblies and individual parts)
- Assembly features (cuts or holes) and component patterns

The first item in the FeatureManager Design Tree is the name of the assembly. In addition to various folders, assembly planes and the origin, the components are listed below the assembly name.

You can expand or collapse each component to view its details by clicking the arrow symbol.

You can use the same component multiple times within an assembly. For each occurrence of the component in the assembly, the suffix <n> is incremented.

Notes

Notes

In the FeatureManager Design Tree, a component name can have a prefix that provides information about the state of its relationships to other components. The prefixes are:

- (-) Under defined
- (+) Over defined
- (f) Fixed
- (?) Not solved

The absence of a prefix indicates that the position of a component is fully defined.

In the CommandManager, the Assembly toolbar gives you quick access to the following commonly used assembly tools:

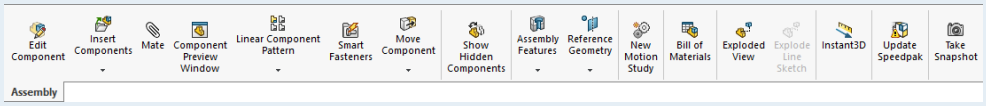

7.3 Linking of Parts in an Assembly

7.3.1 Insertion of the First Component in an Assembly

- Click *File*, *Open*, and then open the component *Attachment.SLDPRT*.

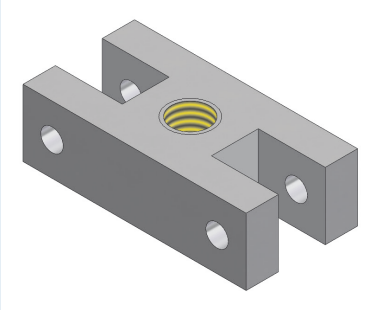

- From the *New* flyout tool in the Standard toolbar, click *Make Assembly from Part/Assembly*.

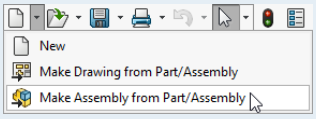

The PropertyManager will show the components that are currently open.

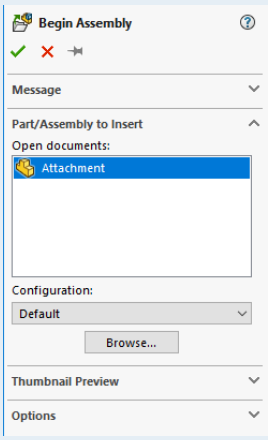

- Make sure the name Attachment is highlighted in the Open documents list. If not, click the part name.

The component *Attachment* is now actively connected to the cursor.

- Place the component on the Origin in the Graphics Area. Note the appearance of the cursor when snapping it to the Origin.

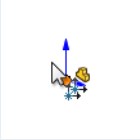

This component (being the first one) will be fixed to the assembly origin.

Clicking *View* in the Menu Bar, *Origins* can be shown or hidden in the Graphics Area.

If you place a component in such a way, the origin of the component is made coincident with the assembly origin. The planes of the assembly are aligned with the component planes, which also makes the component positioning fixed (f). While this is not necessary, it helps you to create an orientation when starting the assembly.

Another way to set the origins coincident with one another is to:

- Click *OK* with the component name highlighted.

SolidWorks automatically makes the origins coincident.

- Close the SolidWorks window Attachment.SLDPRT and maximize the window Assem1.

Notes

Notes

The FeatureManager contains the feature (f) Attachment<1>. The identifier <1> is the first copy of the referenced component included in the assembly.

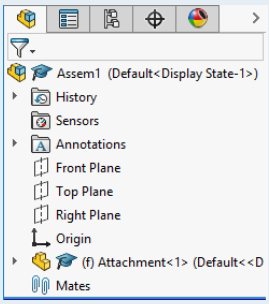

The assembly also contains a blank feature called Mates. This feature is used as a placeholder for mates that are created later.

7.3.2 Insertion of Other Components in an Assembly

- Click *Insert Components* on the Assembly toolbar.

- Click the *Browse* button in the PropertyManager and then select the component *Detachable Jaw. SLDPRT* in the Open dialog box.

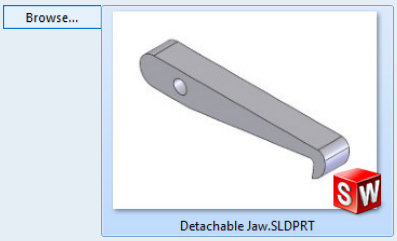

The Detachable Jaw consists of two configurations.

To load a specific configuration, click the component once. The available configurations will appear in the Configurations drop-down menu.

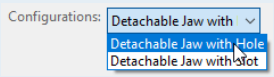

- Open the *Detachable Jaw with Hole*.

- When the component is connected to the cursor, drop it in the Graphics Area by clicking the mouse once.

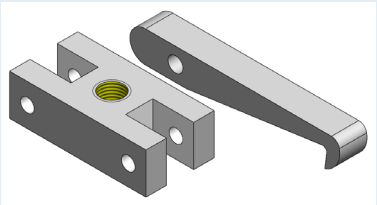

These two components must be linked. The holes that receive the spring pin must be concentric.

- On each of the parts, select the holes as shown.

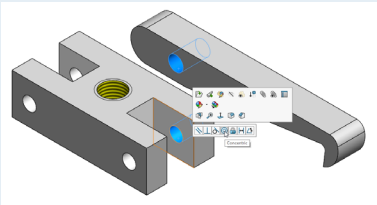

SolidWorks will automatically recommend the Mate *Concentric* in the appearing context toolbar

- Click *Concentric* to add the mate.

Prior to adding mates or fixing (f), each component that is inserted into the assembly has six degrees of freedom:

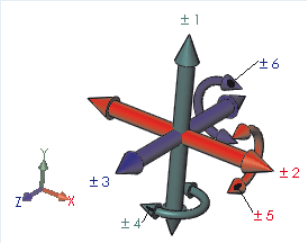

Three translational and three rotational degrees of freedom exist.

Translation occurs along the X-, Y- and Z-Axis while rotation occurs around these axes.

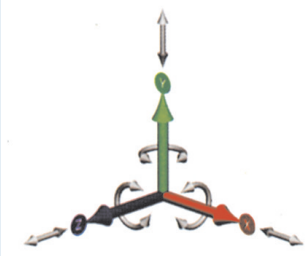

Degrees of freedom determine how a component can move in an assembly.

You can remove degrees of freedom with the *Fix* option or by adding more mates.

The component now has two degrees of freedom. It can be rotated about the center point of the hole and it can be moved axially along the Z-Axis.

For this exercise, you must be able to freely move the component in the axial direction.

Add the Mate *Width* in order to center the Detachable Jaw with Hole exactly in the Attachment groove.

- In the CommandManager, click the *Mate* tool.

Notes

Notes

- In the PropertyManager, expand the *Advanced Mates* area and then click *Width*.

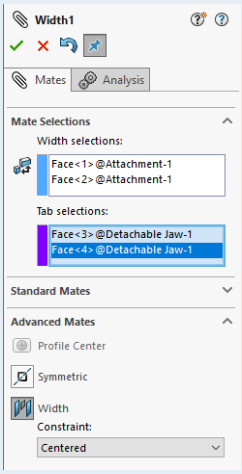

- For the Width selections, pick on the inside facing surfaces of the Attachment groove.

- Activate the *Tab selections* field and then pick on the two outer sides of the Detachable Jaw with Hole.

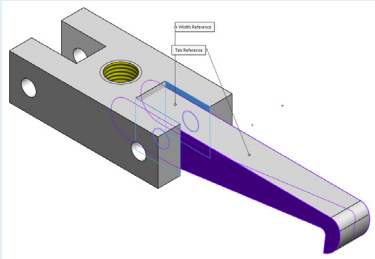

The component is positioned exactly in the center of the groove.

- Click *OK* once.

- In the PropertyManager, expand the *Standard Mates* area.

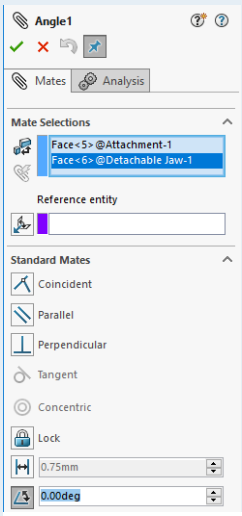

The Puller jaw can now be rotated about the hole. For this exercise, you must remove the rotational degree of freedom. The Mates *Parallel* or *Angle* can be used in this instance.

- Add the Mate *Angle* and then enter 0.00deg in the Angle field. This type of linking will allow greater flexibility when making changes.

- Pick on the surfaces of both components as shown.

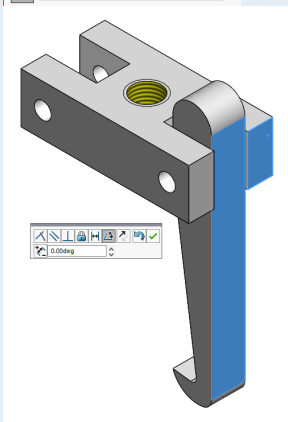

- Click *OK* twice.

The inserted component is now fully defined and can no longer be moved.

A fully defined or fixed (f) component can neither be moved or rotated. To move a component that is not yet linked, you can click on it and, while holding down the LM button, the component can be freely moved about the Graphics Area. Clicking and holding the RM button will only rotate the component.

The component *Detachable Jaw* is used twice in this assembly. The easiest way to insert this component a second time is to copy the component and then add the Mate features again.

- While holding down the *Ctrl* key, click on the component, drag it to a different location and then release the LM.

Ctrl

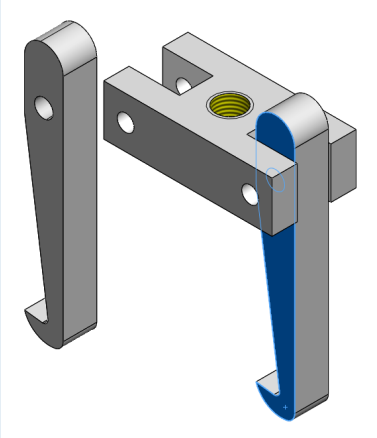

The component is copied.

- RM click and select *Move with Triad* from the shortcut menu.

- Rotate the component about the Y-Axis 180°.
- Add the same linking that was applied to the first jaw.

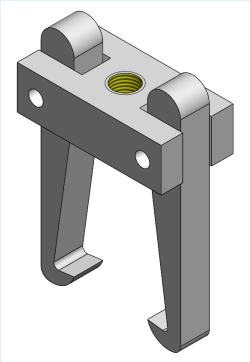

You could also use the *Insert Components* tool to insert the component a second time.

By clicking the flyout tool button, choose *Copy with Mates*. This will create a second instance of the component with included mates from the original instance.

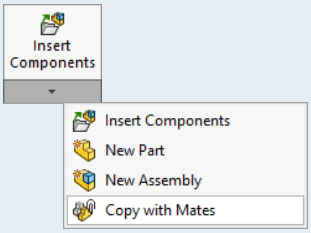

You do not have to create the mates manually for each new instance. However, this does not work with every mate.

Notes

Notes

- Insert the component *Center Bolt* into the assembly.
- Add the following mates as shown on the right:
  - *Concentric* between the Attachment hole and Center Bolt
  - *Distance* of 70 mm (2.8 in) between the Attachment top surface and the Center Bolt top surface
  - *Parallel* between the Attachment front surface and the hexagonal surface of the Center Bolt
- After each added mate, click *OK*.
- After all the mates have been added, click *OK* once more to exit the PropertyManager.

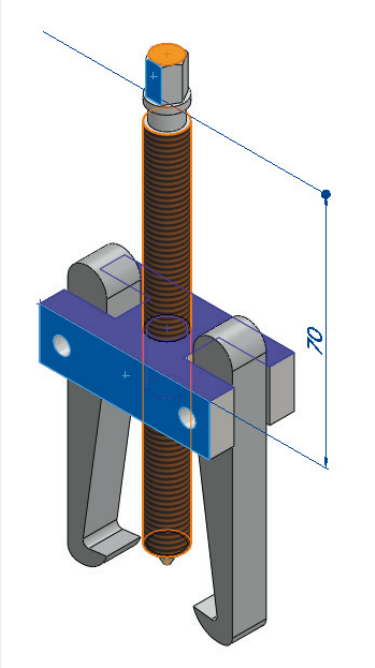

The components can no longer be moved now that all degrees of freedom have been removed.

- Insert the component *Cone Washer* into the assembly.
- Add the following mates:
  - *Concentric* between the Center Bolt and Cone Washer hole
  - *Distance* of 2.2 mm (0.09 in) between the Attachment top surface and the Cone Washer lower surface
- After the second mate is added, click *OK* twice.

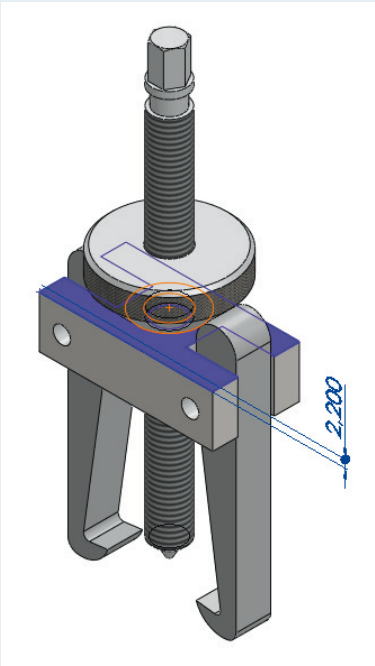

VDW Nachwuchsstiftung
Foundation for Vocational Education

7.4 Design Library Toolbox

Two spring pins of Ø5x24 ISO 8752 must now be installed in the holes.

For most standard parts, there is a toolbox available in SolidWorks where the parts can be generated as individual components and then inserted into the assembly.

- In the Task Pane, click *Design Library* and then click the *Toolbox* tree item.
- Select the *ISO* standard, expand *Pins* and then select *Spring*.
- With the RM button, click *Spring Pin (Slotted - HD) ISO - 8752*.

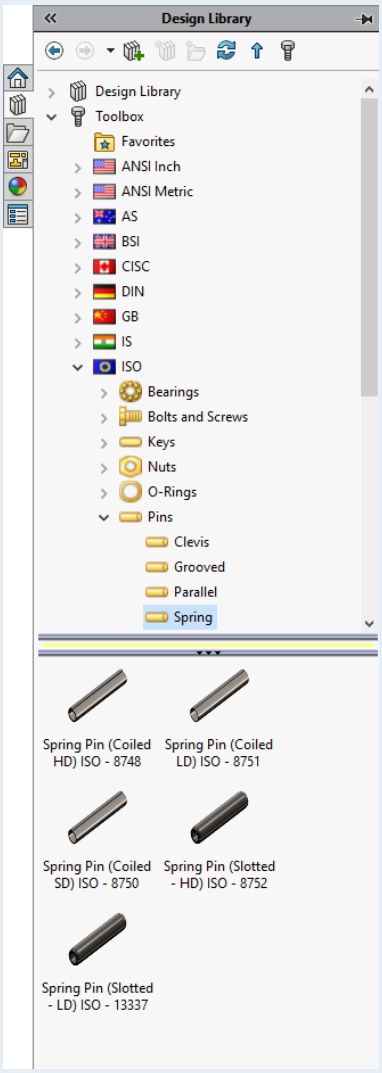

With the RM button, you can choose to insert the component directly into the assembly using *Insert Into Assembly...* However, problems often arise when using this method if the assembly is opened on another computer that has a different version of Toolbox or does not have Toolbox installed.

- Therefore, it is best to choose the *Create Part...* command.

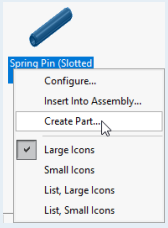

The standard part is created as a SolidWorks Part using the .SLDPRT file extension.

- In the PropertyManager, fill in the required fields.

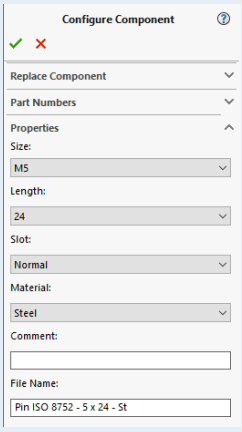

- Click *OK*.

Notes

Notes

Note:
The standard part is still stored in the toolbox.

- Save the created part in the same folder location where all the other assembly components are stored.

T!P This procedure works well if you only need to add a few standard parts. If many standard parts are needed however, it is best to insert them directly using the *Insert Into Assembly...* command. Once the assembly is completed in its entirety, you can then use the *Pack and Go...* command (refer to the SolidWorks Help *Pack and Go...*), which will gather and save all related files of the assembly into a folder or zip file.

If Toolbox is not installed on your computer, the component *Pin ISO 8752 - 5 x 24* is provided.

- Insert the component *Pin* into the assembly.
- Add the Mates *Concentric* and *Width* to position the spring pin centrally in the receiving hole.
- Copy and then install the spring pin into the second receiving hole.
- Proceed in the same way as when copying and linking the component *Detachable Jaw*.

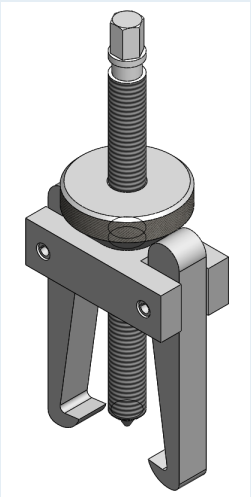

7.5 Creating an Exploded View

You can create an exploded view of the assembly by selecting and dragging parts in the Graphics Area, creating one or more explode steps.

- In the Assembly toolbar, click *Exploded View*.

- Select the components to be moved (e.g., the spring pins).

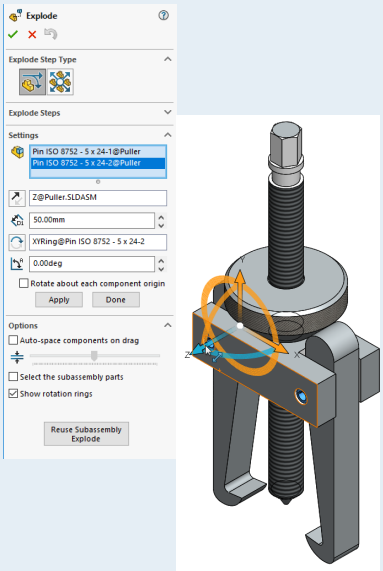

Rotation and translation handles appear in the Graphics Area. By clicking and holding one of the arrows (e.g., Z-Axis) with LM, you can drag the spring pins out of the holes.

In the PropertyManager, you can also enter an exact distance in the D1 field.

- After each explode step, pick on the next component or group of components you wish to move and drag them using the axis handles. When you are finished, click *OK*.

You have now created an exploded view with several explode steps.

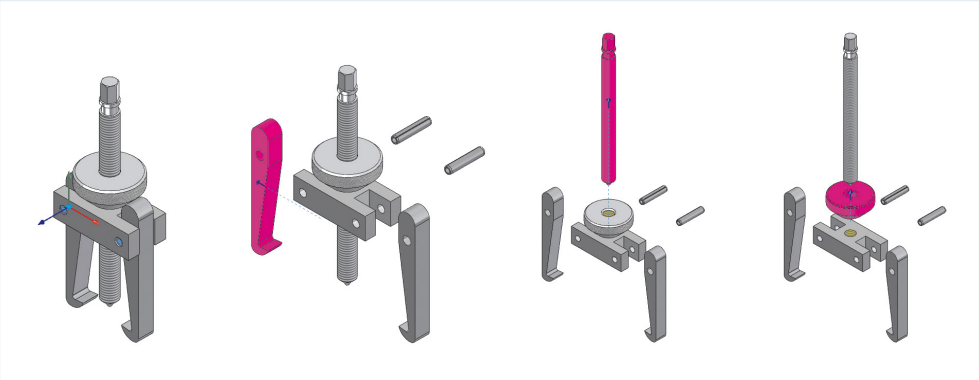

7.6 Modifying the Exploded View

You can edit the explode steps or, if necessary, add new ones.

- Click the *ConfigurationManager* tab at the top of the Manager Pane.

Notes

Notes

- Using the arrow symbols, expand the *Default [Puller]* and *ExplView1* tree items to show their contents.

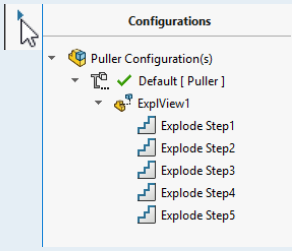

- With the RM button, click the *Explode Step* that needs modifying and then choose *Edit Explode Step*.

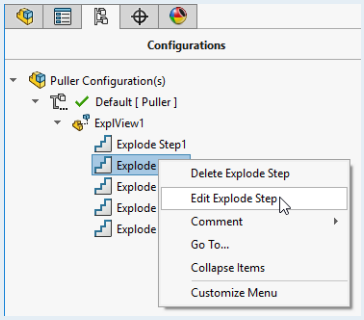

The PropertyManager appears with the chosen Explode Step activated.

- When you are satisfied with the exploded view, click *OK*.

- To restore the assembly, RM click *ExplView1* and choose the *Collapse* command from the shortcut menu. You can also LM double-click *ExplView1* to *Collapse* or *Explode* the assembly. There are also the options to *Animate collapse* or *Animate explode* the assembly.

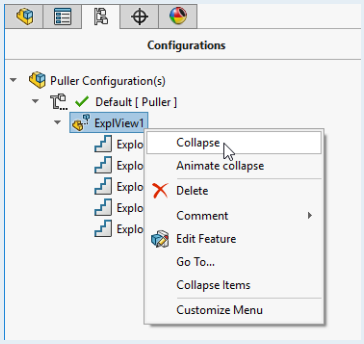

- Now create the assembly *Workpiece Stop* and then create an exploded view.

The steps necessary to complete this task were learned during the creation of the Puller.

Chapter 8

Specifying Tolerances and Properties

8.1 Setting Tolerances

Prior to manufacturing the individual parts of an assembly, the function of each component must be analyzed and considered in the design.

Take, for example, the assembly *Puller*.

The jaws must be able to move freely around the spring pins and in the Attachment grooves.

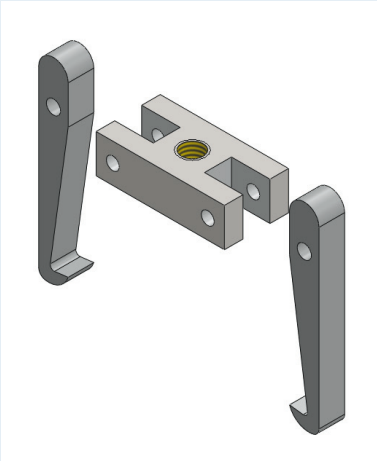

To ensure this mobility, the parts must be assigned tolerances to guarantee that functionality after the assembly.

In order to guarantee the movement of the components, it is necessary to have a fit tolerance with adequate clearance to allow for some play.

For this exercise, you also have to set tolerances so that no jamming will occur between the components with the jaws at their maximum width and the grooves at their minimum width.

Appropriate tolerance specifications would be 10 -0.1 mm (0.4 -0.004 in) for the width of the jaws and 10 +0.4/+0.2 mm (0.4 +0.02/+0.01 in) for the width of the grooves.

Notes

Notes

- Open the component *Attachment*.
- With the LM button, double-click the feature *Cut-Extrude2* in order to display the groove dimensions.

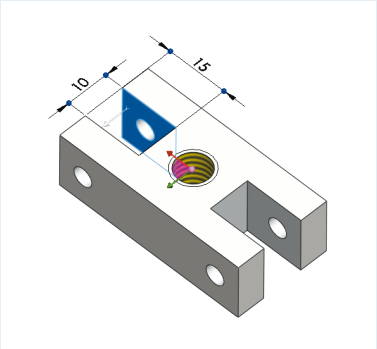

- Pick on the desired dimension in the Graphics Area to display the Dimension PropertyManager.
- In the Tolerance/Precision area, select *Bilateral* from the Tolerance Type drop-down menu.
- In the appropriate fields, enter the maximum and minimum allowable width of the groove. If the lower deviation is positive, a (+) sign must also be entered.

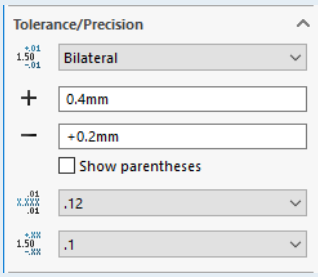

- Set the Tolerance Precision to one place after the decimal point (*.1*).
- Click *OK*.

The specified tolerance is added to the dimension.

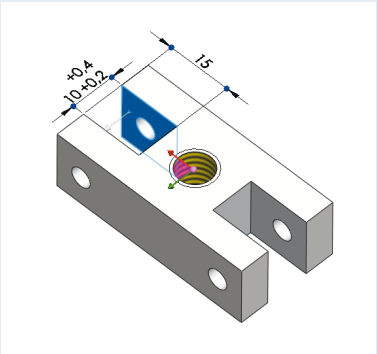

- Follow the same procedure to set the tolerance 10 -0.1 mm (0.4 -0.004 in) for the width of the component *Detachable Jaw with Hole*.

- Now specify the necessary tolerances for the assembly *Workpiece Stop*.

The steps necessary to complete this task were learned and applied in this exercise.

VDW Nachwuchsstiftung
Foundation for Vocational Education

8.2 Setting File Properties

Components and assemblies that you create can be provided with a PartNo (part number) and other properties such as Sheet Scale and Created Date. When making the 2D drawing for production, these properties are automatically included in the bill of materials (BOM). For this purpose, certain properties are linked to the Sheet Format.

- With the part open, click *File* in the Menu Bar and select *Properties...*

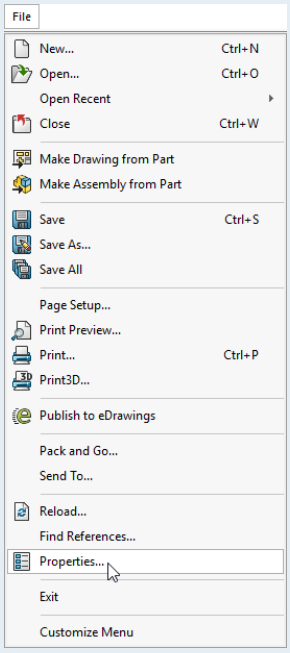

- Fill out the required fields and then click *OK*.

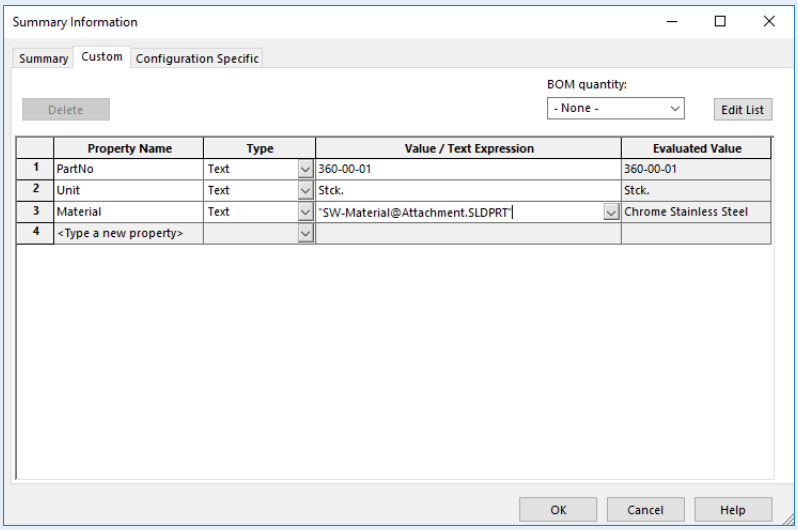

The part properties will now be automatically included in the drawing.

For the linking of other properties to the Sheet Format, refer to the SolidWorks Help *Link to Property*.

Notes

Chapter 9

Creating an Assembly Drawing

Notes

9.1 Procedure for Creating an Assembly Drawing

In principle, a 2D drawing of the assembly is created in a similar way as for individual parts.

Additionally, the drawing document must include a bill of materials (BOM) and BOM Balloons (item numbers). By default, the balloons are assigned to the parts by their order of insertion into the assembly. For example, the first component inserted into the assembly is assigned Item No. 1, and so on...

The balloons can be generated automatically or manually.

If preferred, you can create a BOM directly from the assembly (prior to making the drawing) by clicking *Bill of Materials* on the Assembly toolbar.

The basic procedure for creating an assembly drawing is outlined in the following steps.

Step 1:	■ Check/set the desired front view of the assembly.
Step 2:	■ Make Drawing from Part/Assembly and select Sheet Format/Size.
Step 3:	■ Change the sheet scale (if necessary).
Step 4:	■ Insert views onto the drawing sheet.
Step 5:	■ Generate section views (broken-out or via section lines).
Step 6:	■ Add centerlines and center marks (if not automatically added according to the Document Properties).
Step 7:	■ Remove unwanted Blocks from the drawing sheet.
Step 8:	■ Insert the BOM (*Insert* > *Tables* > *Bill of Materials...*).
Step 9:	■ Insert BOM Balloons (automatically or manually).
Step 10:	■ Complete the text fields as needed.

VDW Nachwuchsstiftung
Foundation for Vocational Education

9.2 Creating the Drawing

On the following pages, the example assembly *Puller* is used to illustrate the steps that are necessary to create an assembly drawing and BOM.

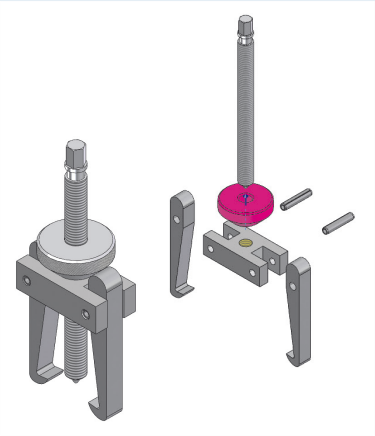

- Work through this example.
- Use the information to create an assembly drawing and BOM for the Workpiece Stop.

9.2.1 Preparing the Assembly

Step 1:
Check that the front view of the assembly will match the desired front view in the drawing.

- Open the assembly *Puller* and, if the front view does not match the front view needed for the drawing, follow the steps outlined in Chapter 2.2.

9.2.2 Starting the Drawing

Step 2:
Make a drawing from the assembly and select the sheet size.

- In the Standard toolbar, choose the *Make Drawing from Part/Assembly* command from the *New* flyout tool.

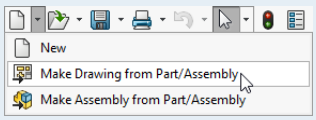

- From the Open dialog box, open the Sheet Format *DIN A4 ISO 7200 VDW*.
- Click *OK*.

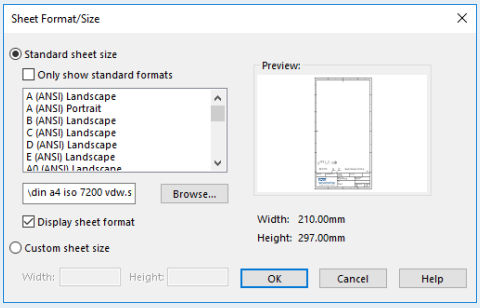

Notes

Course_Materials
EDU Templates

Notes

A new drawing document is started using the selected template and the current sheet scale is displayed in the Status bar at the bottom of the SolidWorks window.

Step 3:
Change the sheet scale.

- To change the sheet scale, RM click on the sheet and select *Properties...*

- Set the Scale values to 1:1 in the Sheet Properties dialog box and then click *OK*.

Step 4:
Insert views onto the drawing sheet.

- Click and hold the *Front* view in the View Palette and then move the cursor into the Graphics Area (Drag and Drop).

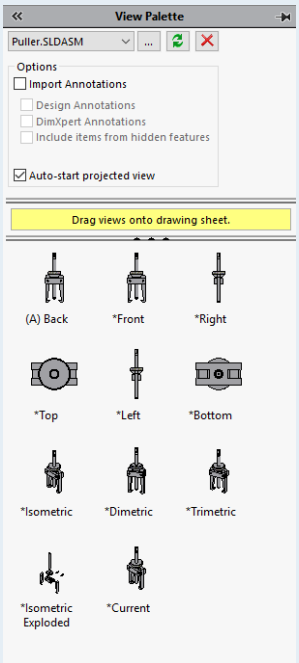

- Drop the view onto the drawing sheet by releasing the LM.

- Move the cursor around in different directions.

- Insert the *Isometric* view onto the drawing sheet.

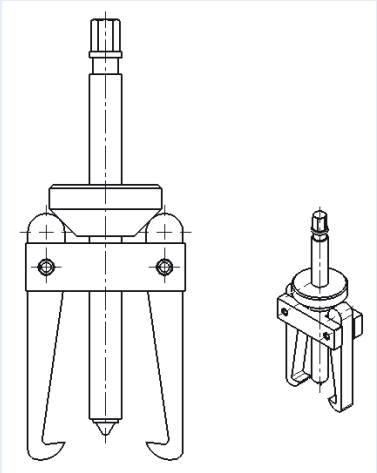

- For the isometric view only, change the scale to 1:2.

- Click the *Isometric* view on the drawing sheet and then in the PropertyManager, select *Use custom scale*. From the drop-down menu, choose *1:2*.

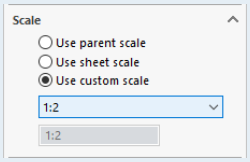

- Click *OK*.

Step 5:
Generate section views.

- Create sectional views where there are hidden areas unable to be shown with normal drawing views.

Step 6:
Add centerlines and center marks.

Centerlines and center marks are automatically added (if enabled in the Document Properties) to the views.

Step 7:
Remove unwanted Blocks from the drawing sheet.

- As described in Chapter 2.2.6, delete the unwanted Blocks.

The isometric view should be displayed as an exploded view.

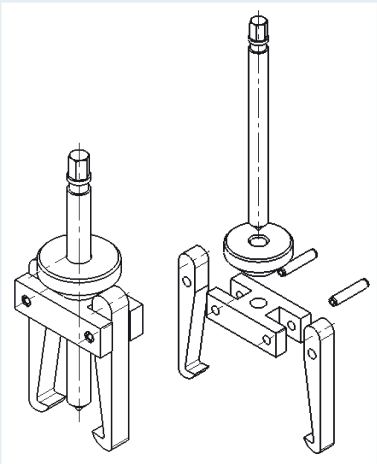

Notes

Notes

- RM click the *Isometric* view on the drawing sheet and then choose *Properties...* from the shortcut menu.

- Under the View Properties tab, click the *Show in exploded or model break state* check box.
- Click *OK*

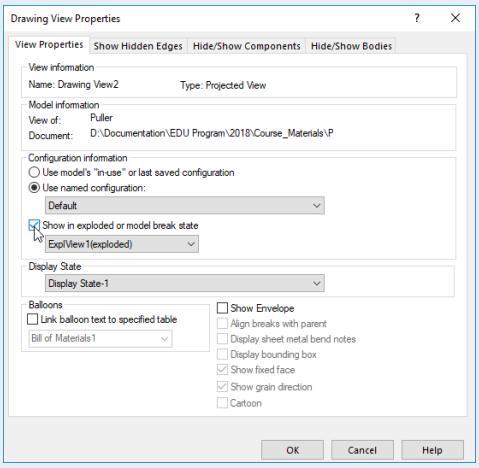

9.2.3 Illustration of a Knurl

The Cone Washer has a knurl feature to allow for a better grip on the part.

- In order to show the knurling, sketch a rectangle over the area.

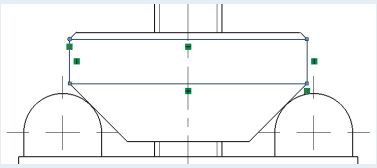

- Switch to the *Annotation* toolbar in the CommandManager and choose the *Area Hatch/Fill* tool.

Since the rectangle is still active, the area is then hatched.

- Select the Hatch Pattern *ANSI37 (Lead Zinc Mg)* with a Hatch Pattern Scale of *2*.
- Click *OK*.

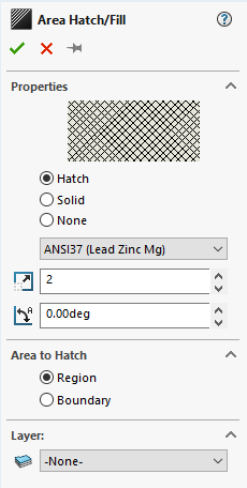

T!P For a knurl with axially parallel grooves, you can use the Hatch Pattern *ANSI31 (Iron BrickStone)* with a Hatch Pattern Angle of *45.00deg*.

9.2.4 Inserting a Thread into an Assembly Drawing

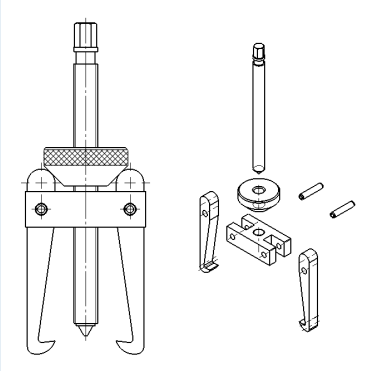

If a thread is present on a SolidWorks component, you should also show this feature in the drawing.

- Click the *Front* view on the drawing sheet and in the PropertyManager, choose *High quality* for the Cosmetic Thread Display.

- Switch to the *Annotation* toolbar in the CommandManager and choose the *Model Items* tool.

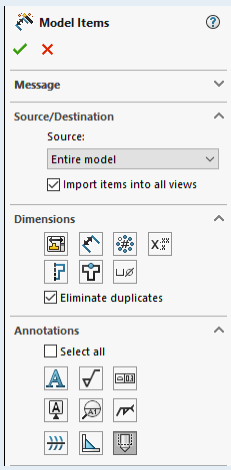

- For Source/Destination, choose *Entire model* and enable the *Import items into all views* check box.
- In the Dimensions area, make sure that no option is selected.
- In the Annotations area, choose the *Cosmetic thread* option.

- Click *OK*.

The threads are added to the drawing.

9.2.5 Inserting a Bill of Materials (BOM)

Step 8:
Insert the BOM.

At this point, the drawing still needs the bill of materials (BOM) and the BOM Balloons.

- In the Menu Bar, click *Insert* > *Tables* > *Bill of Materials...* or from the Annotation toolbar, choose *Tables* > *Bill of Materials*.

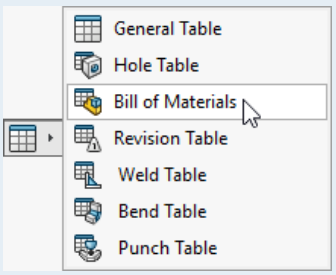

Notes

Notes

Using the BOM PropertyManager, you can insert an editable Table-based BOM onto the drawing sheet.

- If you want to use a different template, click the *Open table template for Bill of Materials* next to the Table Template name field.

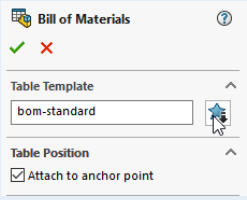

Attach to anchor point should be enabled in the Table Position area (refer to the SolidWorks Help *Table Anchors*).

- If the check box is not enabled, click *Attach to anchor point*.

- Click *OK*.

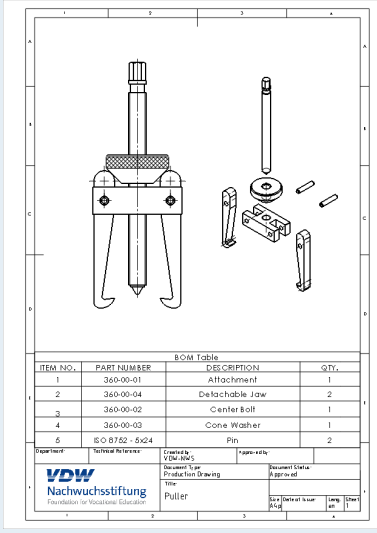

9.2.6 Inserting the BOM Balloons

Step 9:
Insert the BOM Balloons.

At this point, the drawing still needs the BOM Balloons.

The Balloon tools can be found on the Annotation toolbar of the CommandManager.

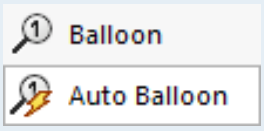

The balloons can be generated automatically or manually.

For this exercise, the balloons will be generated manually.

- Click *Balloon*.

- Click on each of the components and position the balloons.

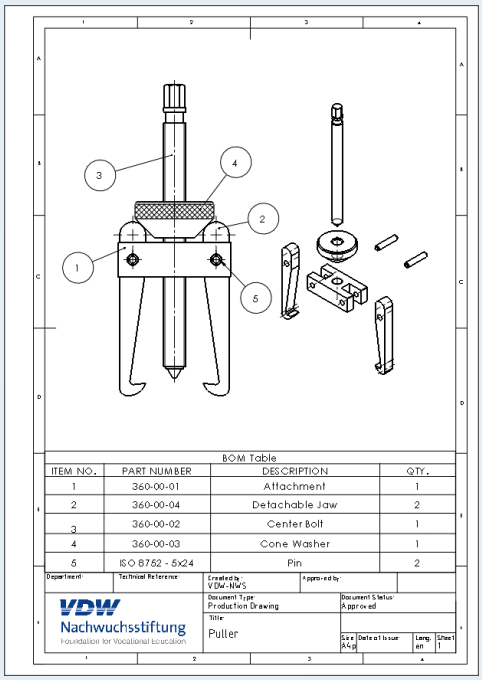

Step 10:
Complete the text fields.

If necessary, you can complete the text fields as described in Chapter 2.2.6.

- Now create a 2D drawing for the assembly *Workpiece Stop*.

The steps necessary to complete this task were learned during the creation of the Puller assembly drawing.

With the lessons in this book and working in SolidWorks, you have learned how to:

- create a variety of 3D parts
- generate 2D production drawings
- create an assembly consisting of 3D components
- generate standard parts using Toolbox
- create assembly drawings
- generate a bill of materials (BOM) and BOM Balloons
- specify tolerances and properties

...and much more.

Notes

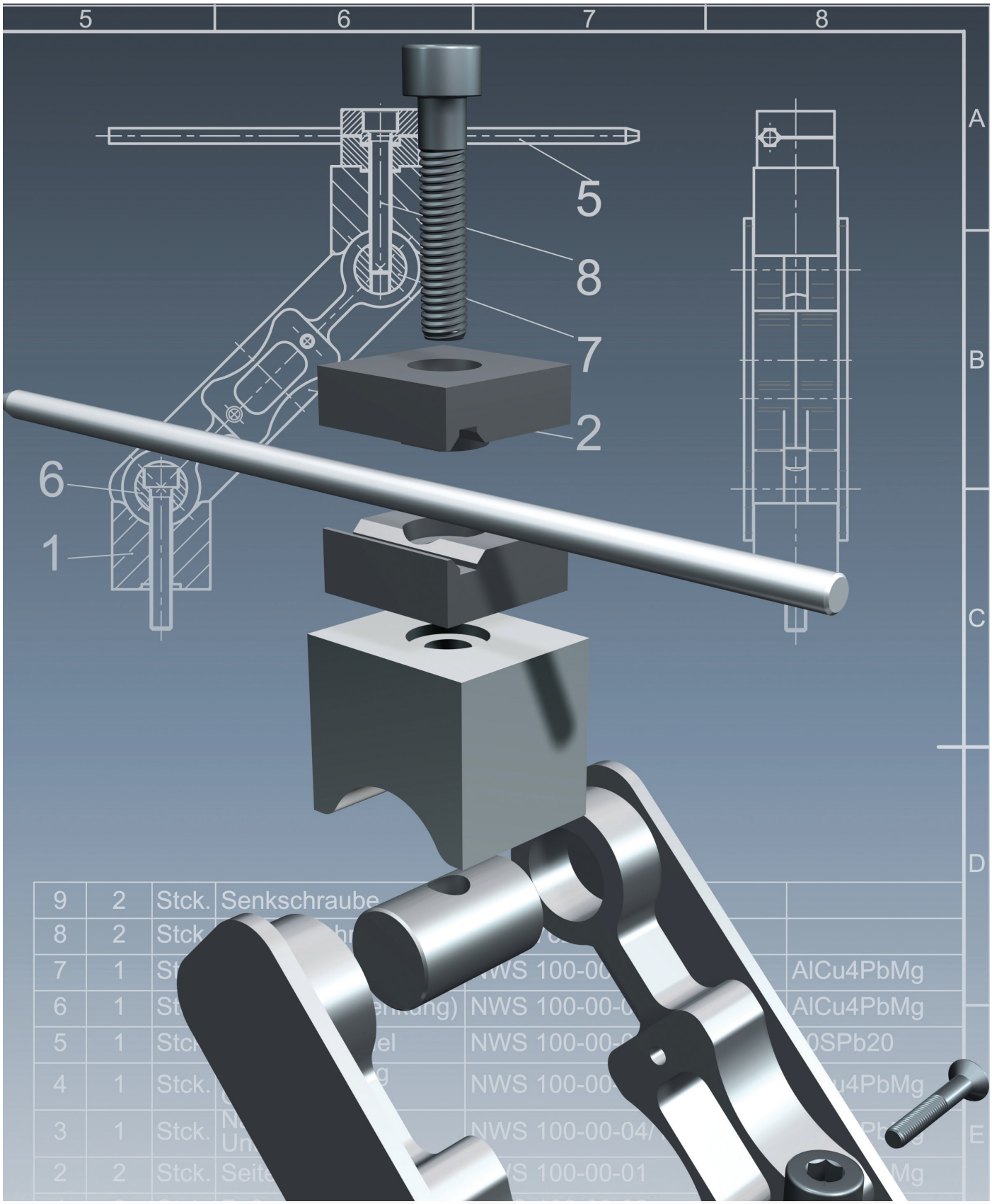

CAD Appendix

Hand Sketches

Notes

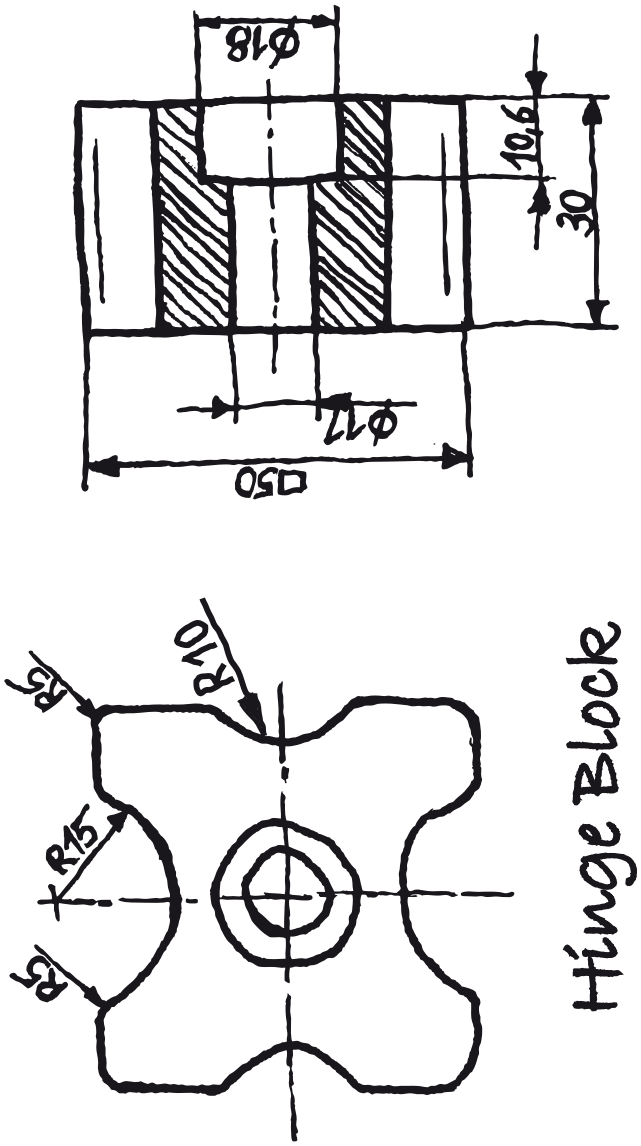

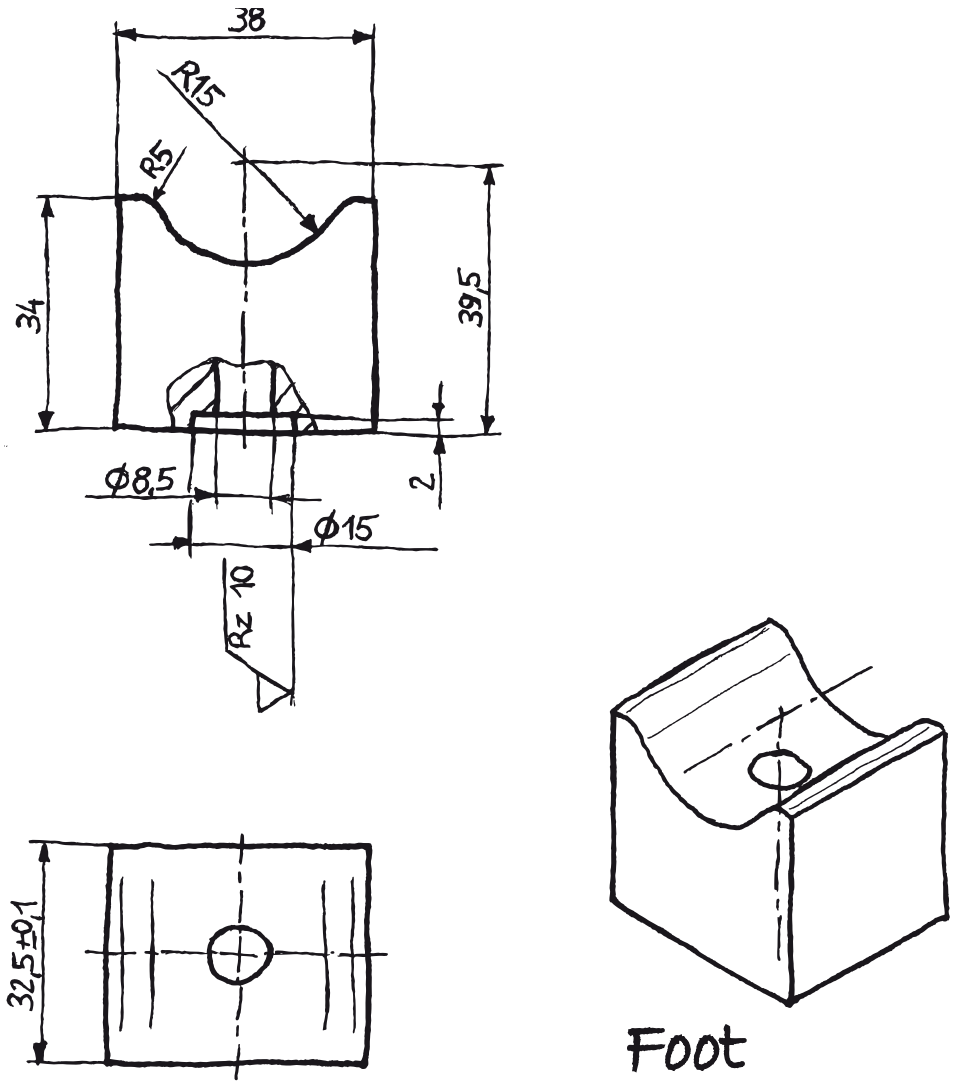

Notes

Notes

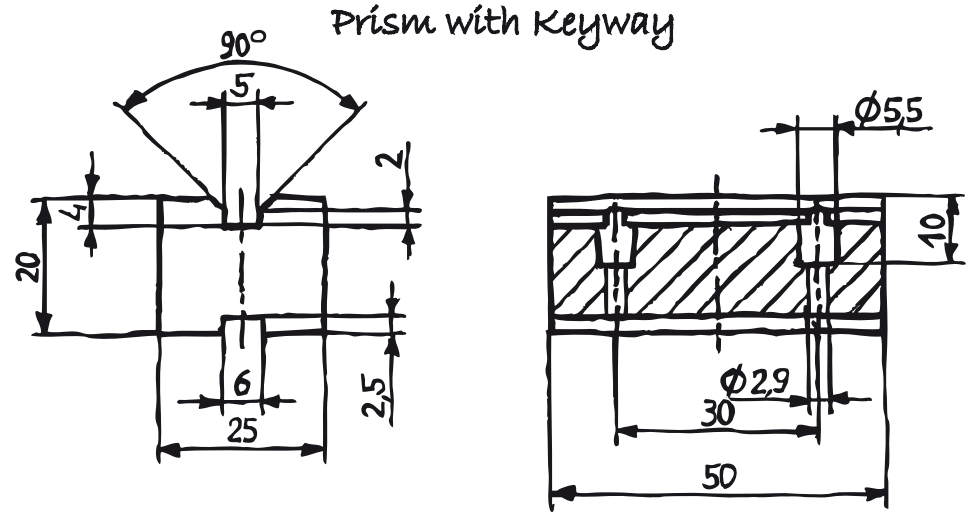
Prism with Keyway
90°
5
2
4
20
6
25
2,5
Ø5,5
10
Ø2,9
30
50

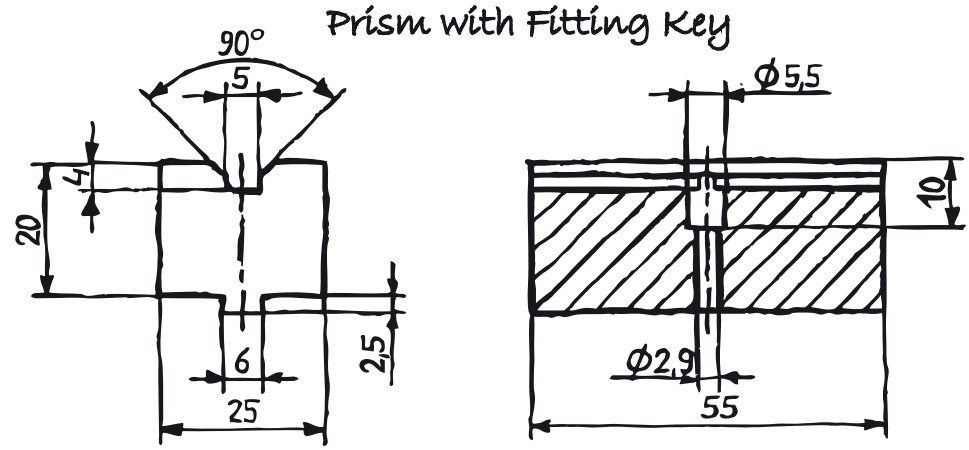
Prism with Fitting Key
90°
5
4
20
6
25
2,5
Ø5,5
10
Ø2,9
55

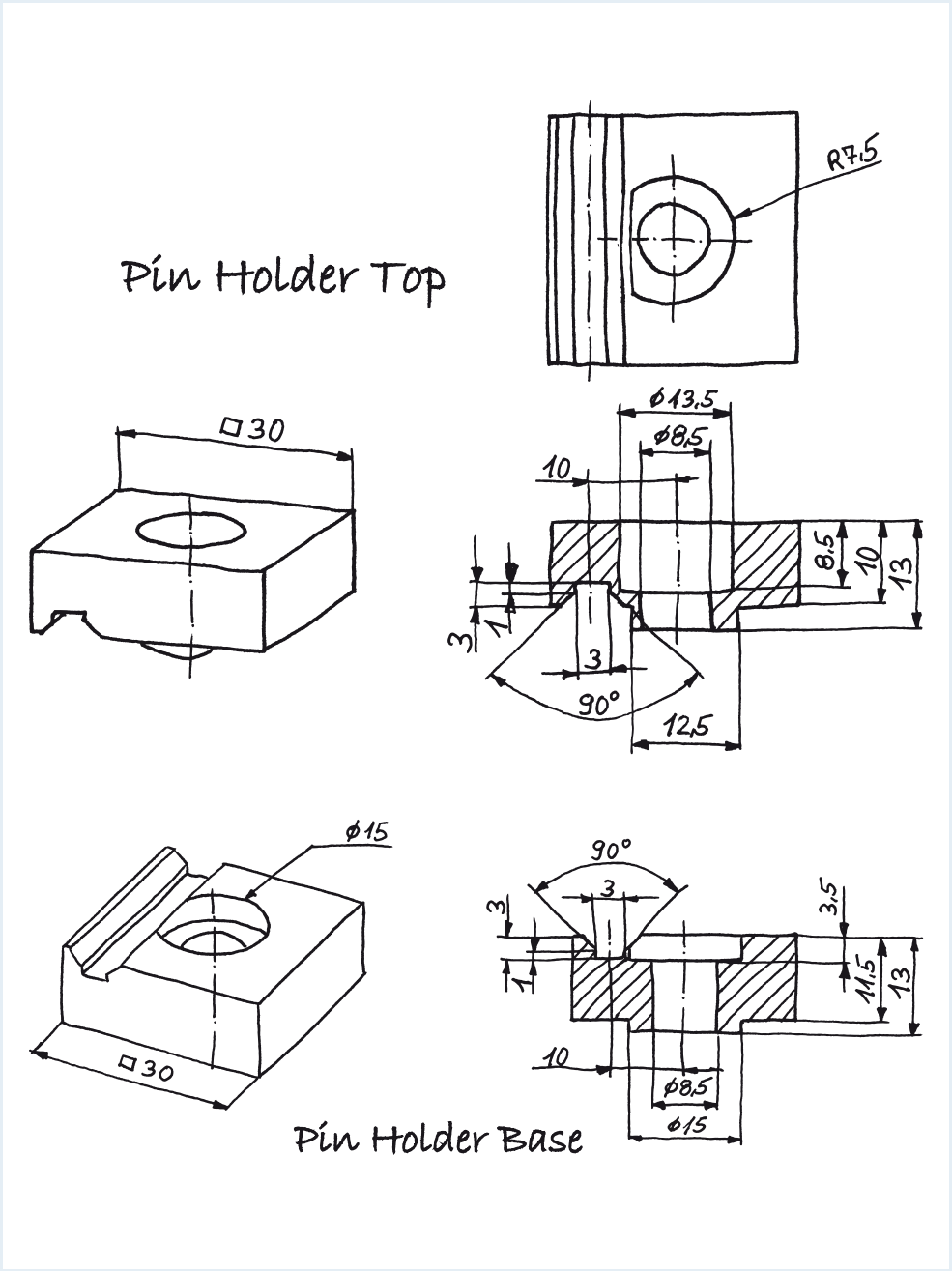
Pin Holder Top
R7,5
□30
ϕ13,5
ϕ8,5
10
8,5
10
13
3
1
3
90°
12,5
ϕ15
□30
90°
3
3
1
3,5
11,5
13
10
ϕ8,5
ϕ15
Pin Holder Base

Notes

Notes

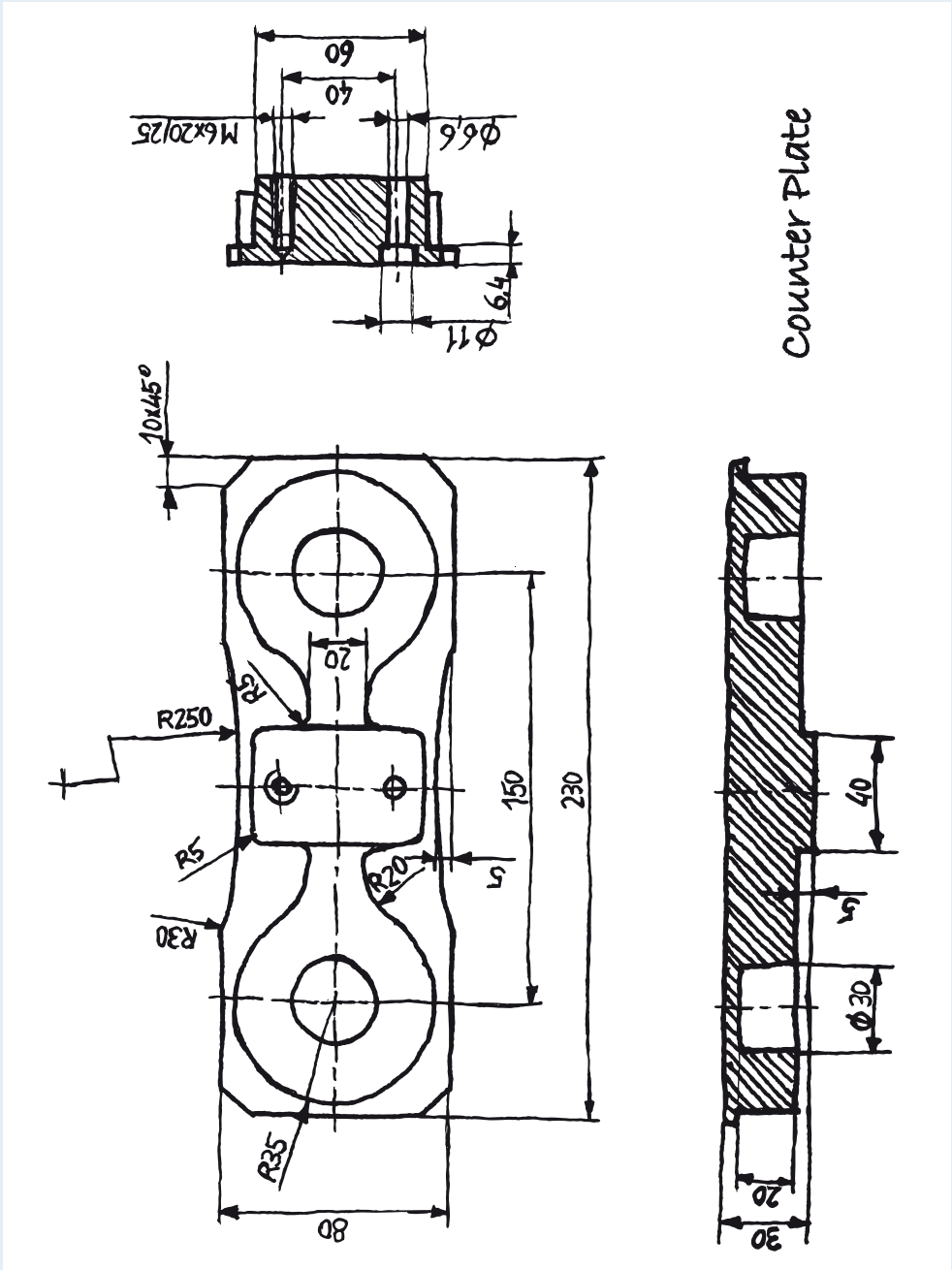
Counter Plate
60
40
M6x20/25
Ø6,6
6,4
Ø11
10x45°
R250
R5
20
R5
R30
R20
5
150
230
R35
80
40
5
Ø30
20
30

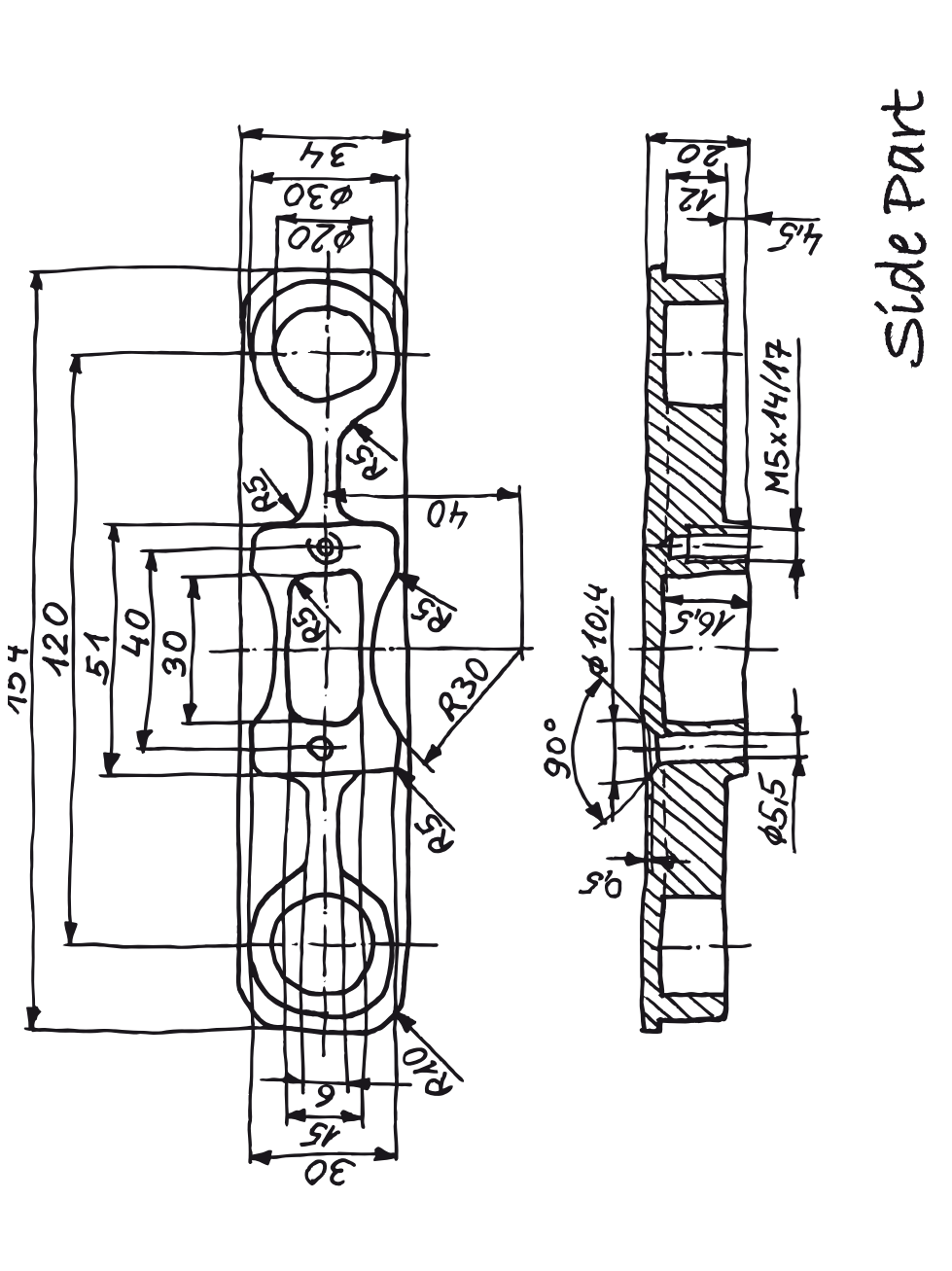
Side Part
154
120
51
40
30
R5
R5
R5
R5
R5
40
R30
R10
6
45
30
34
Ø30
Ø20
20
12
4,5
M5x14/17
16,5
Ø10,4
90°
0,5
Ø5,5

Notes

Notes

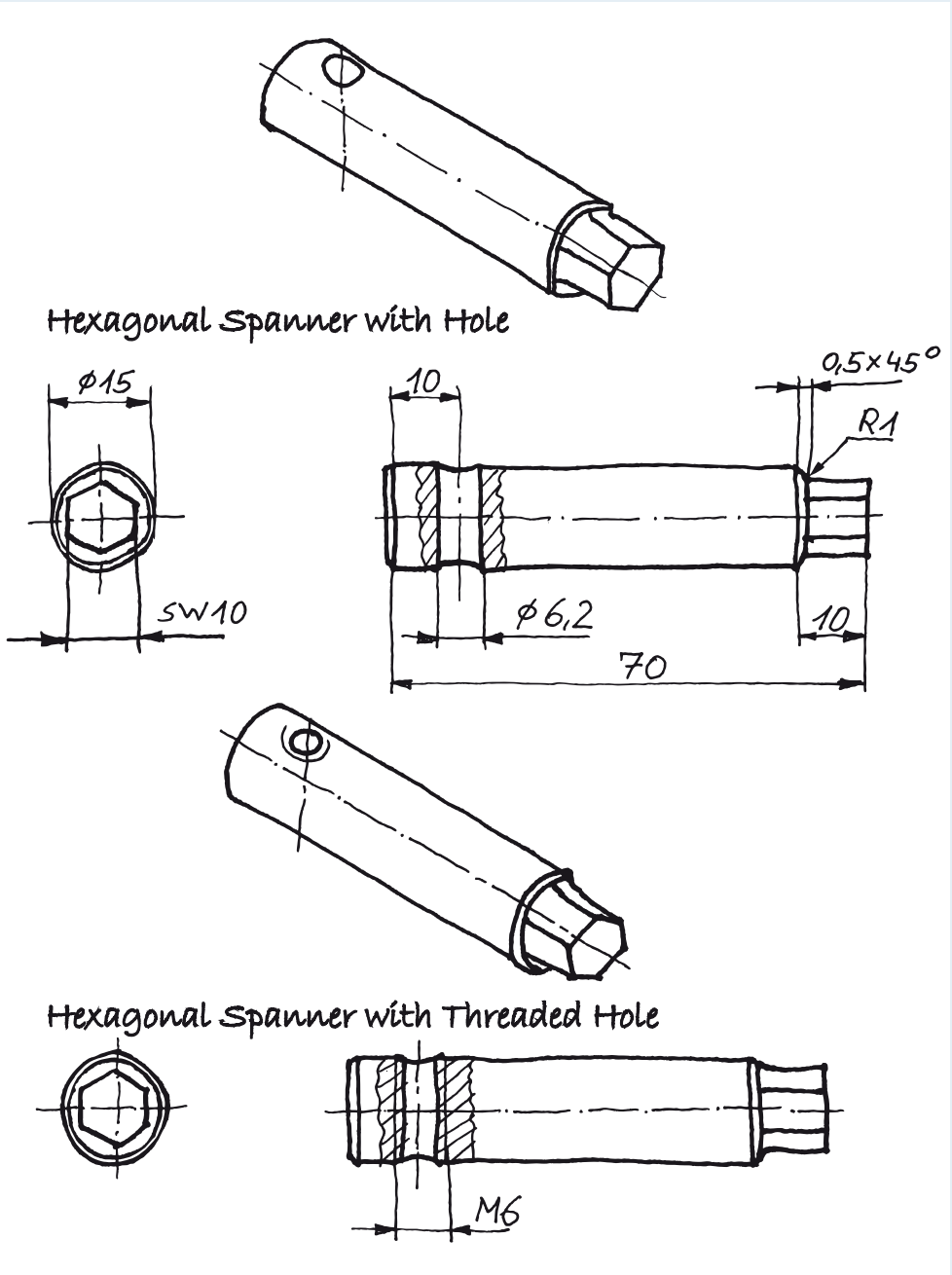
Hexagonal Spanner with Hole
ø15
10
0,5×45°
R1
SW10
ø6,2
10
70
Hexagonal Spanner with Threaded Hole
M6

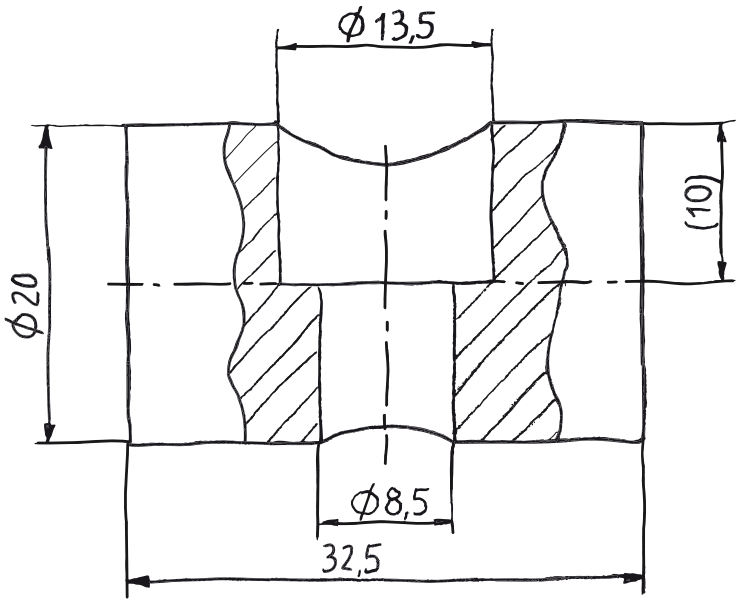

Studs

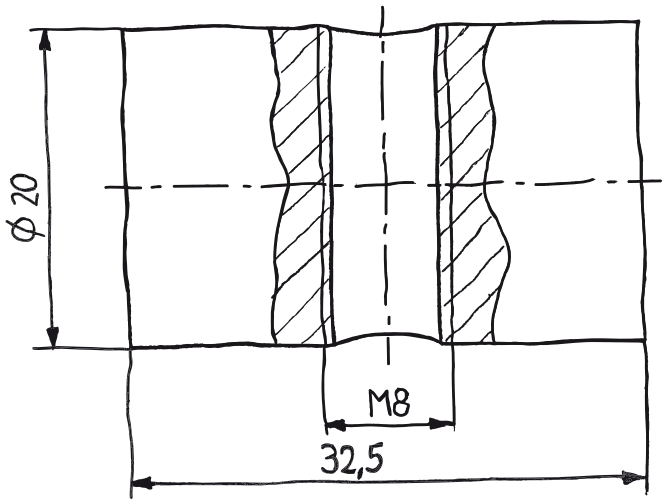

Notes

Notes

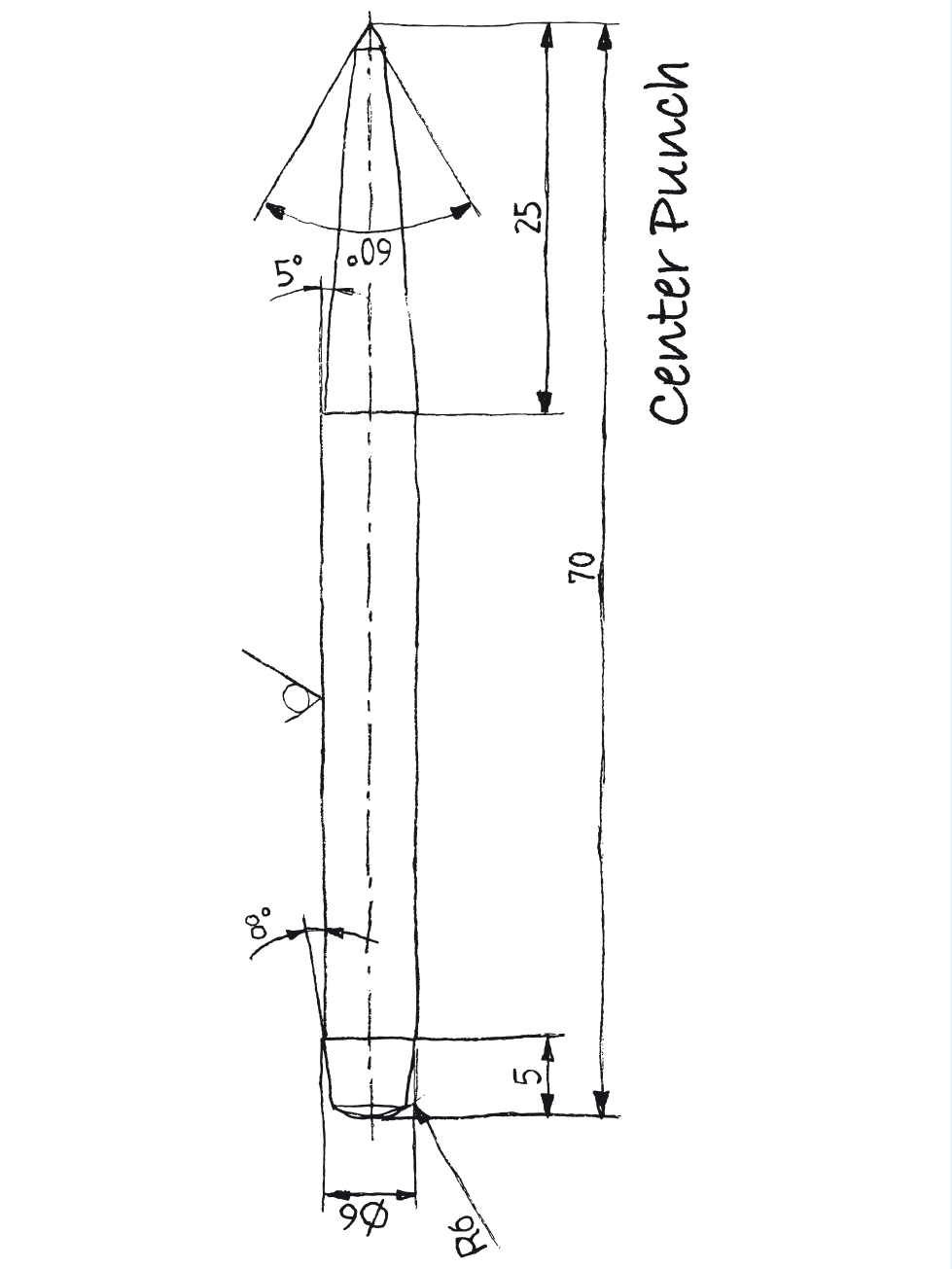

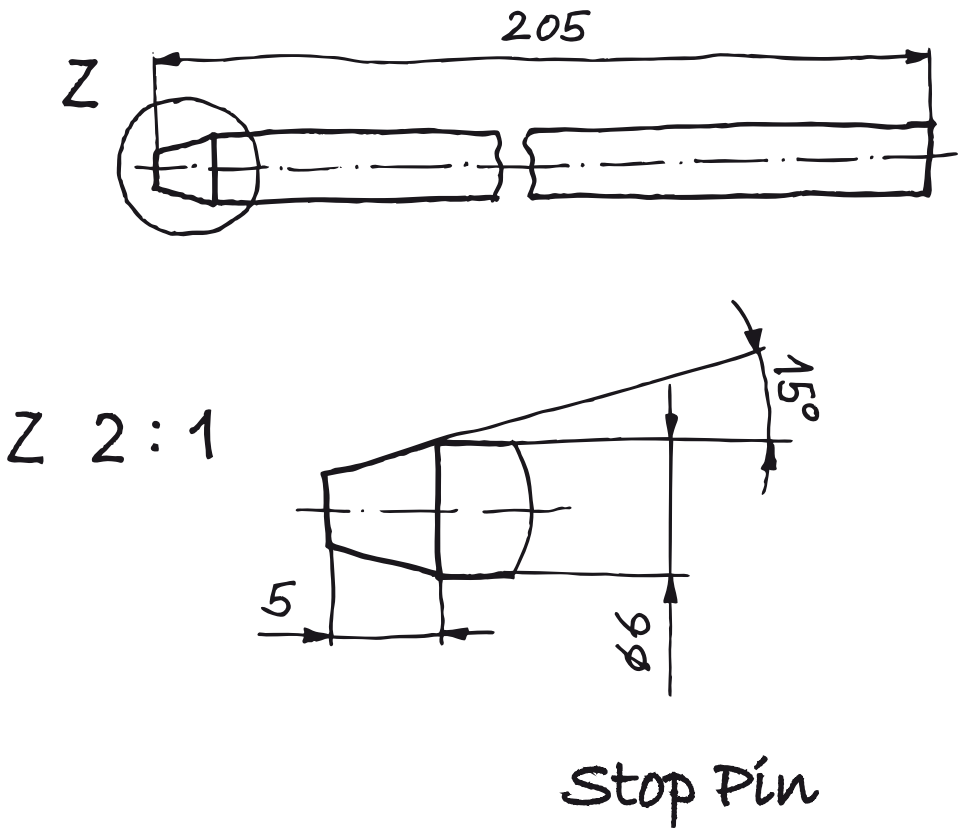

Notes

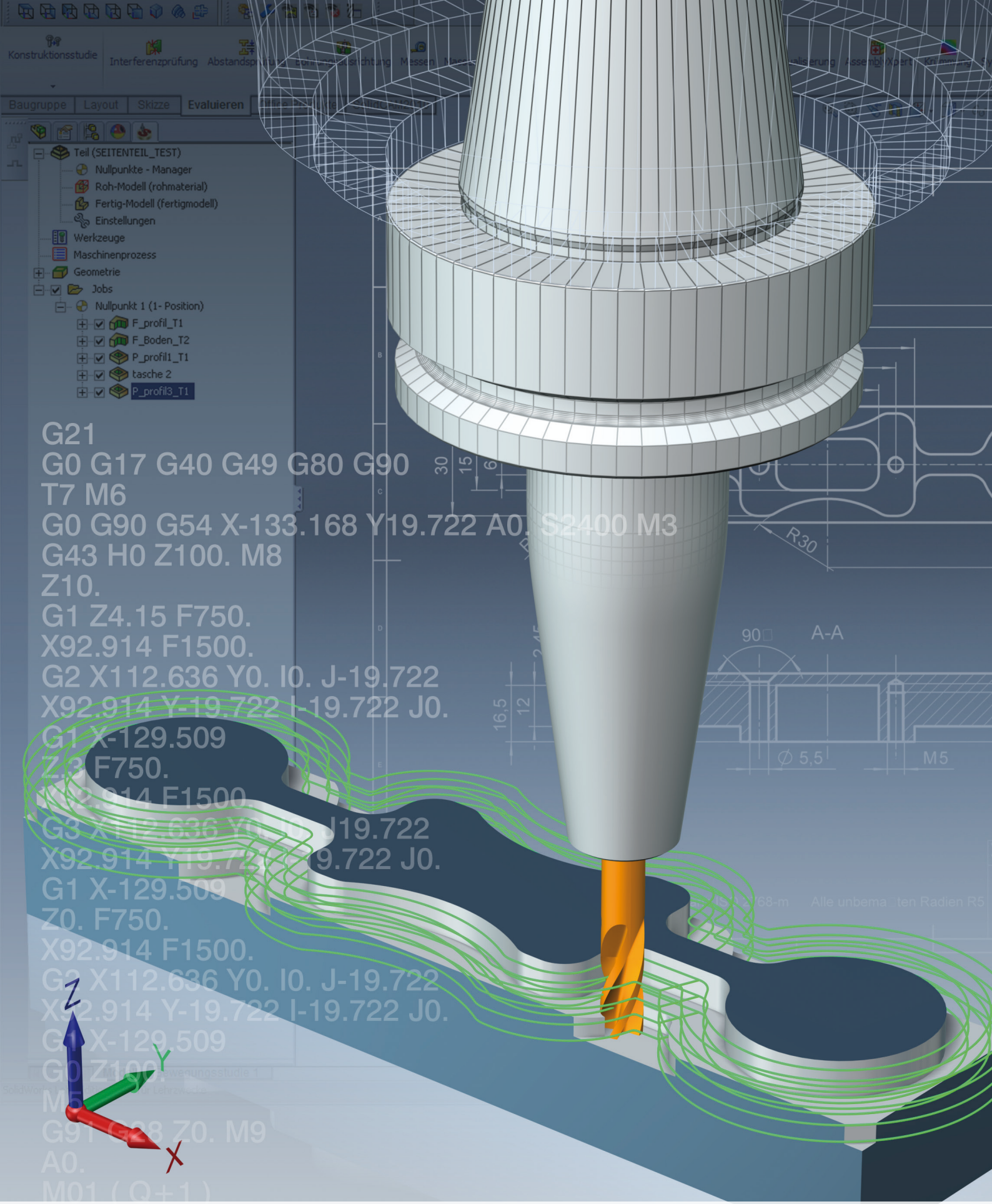

CAM

Manufacture with SolidCAM

Notes

CAM Scenario

Your factory is now assigned the task of mass-producing the Adjustable Workpiece Stop assembly. In order to make all the necessary preparations for manufacturing, SolidCAM is used to produce the required CNC programs. The components will be manufactured on a 3-Axis milling machine.

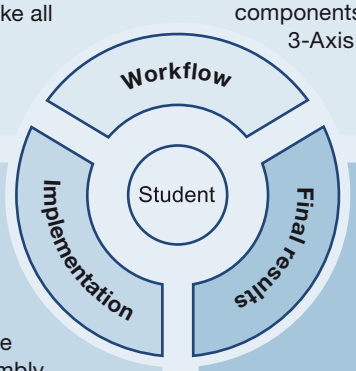

Procedures

1. Problem analysis

- Understand and describe the function of the Assembly
- Discuss the problems and solutions
- Determine the objectives

2. Planning the solution

- Provide information
- Work specifications (designation of the duties, regulations, working hours and the responsibilities)
- Plan the sequence of lessons

3. Prepare and present solutions

- Obtain the necessary information
  - What workholding is available?
  - How are the geometries defined for machining?
  - What tools are needed?
  - What are the available strategies for machining?
  - How is GCode generated?
- Create a work plan
- Determine the proper workholding
- Assign the machining strategies
- Define the machining geometries
- Select the appropriate tools
- Calculate the technological data
- Generate the GCode
- Manufacture the components
- Present the final results

4. Review of the final results

- Evaluate the quality of the parts
- Evaluate the production strategy
- Evaluate the implemented procedures
- Discuss the problems and final results

5. Reflection of the procedures

- Assess the learning process
- Assess procedures and methodologies

Manufacturing Process

Work on the PC

- Program the parts
- Review the tool paths

Work at the machine

- Manufacture the components
- Perform a quality check
- Assemble the components

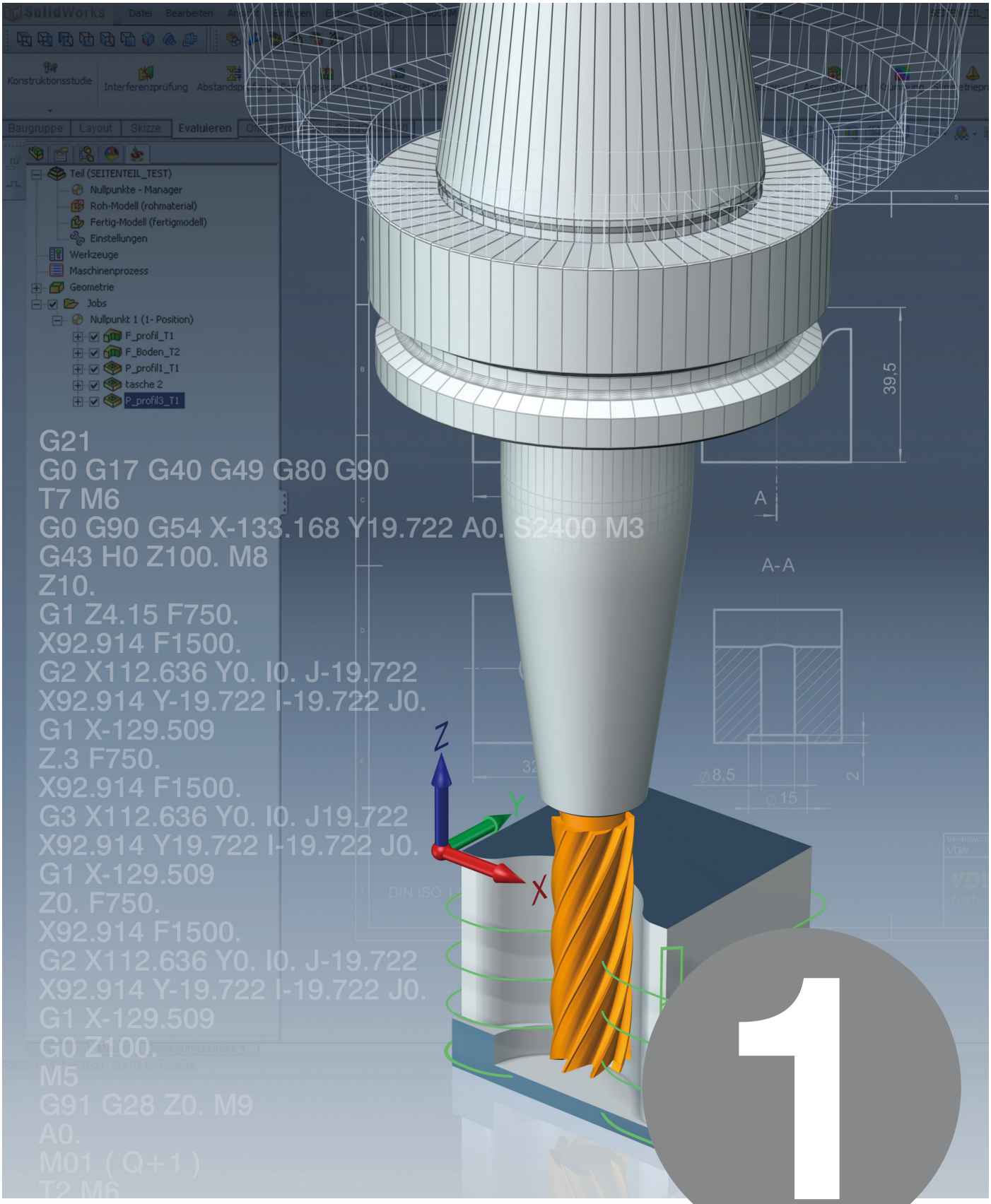

Lesson

Manufacturing the Foot

Lesson 1:

Manufacturing the Foot

Notes

Create the CAM program for the component *Foot* and then generate the GCode file.

Use the drawing on the next page for referencing features and dimensions.

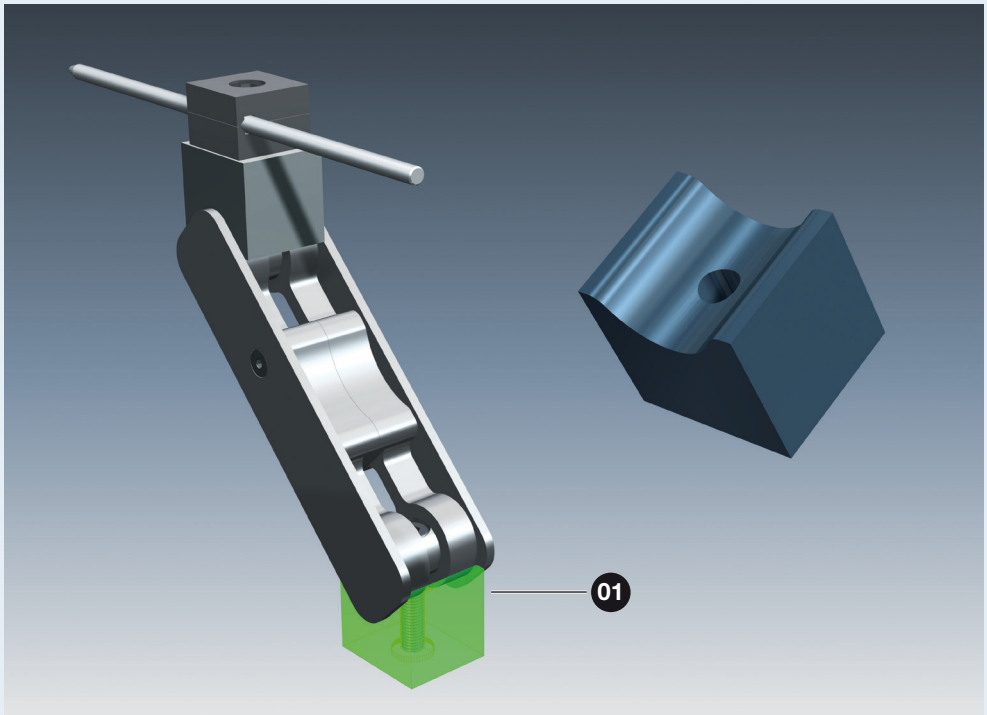

Introduction

Workflow Approach

1. Analyze the above task together with the production drawing, and then determine the objective and how to achieve it.

2. Plan and implement a procedure for completing the lesson.

3. Create the CAM program, generate the GCode file and then save the results of your work.

4. Evaluate your results and reflect on the procedure.

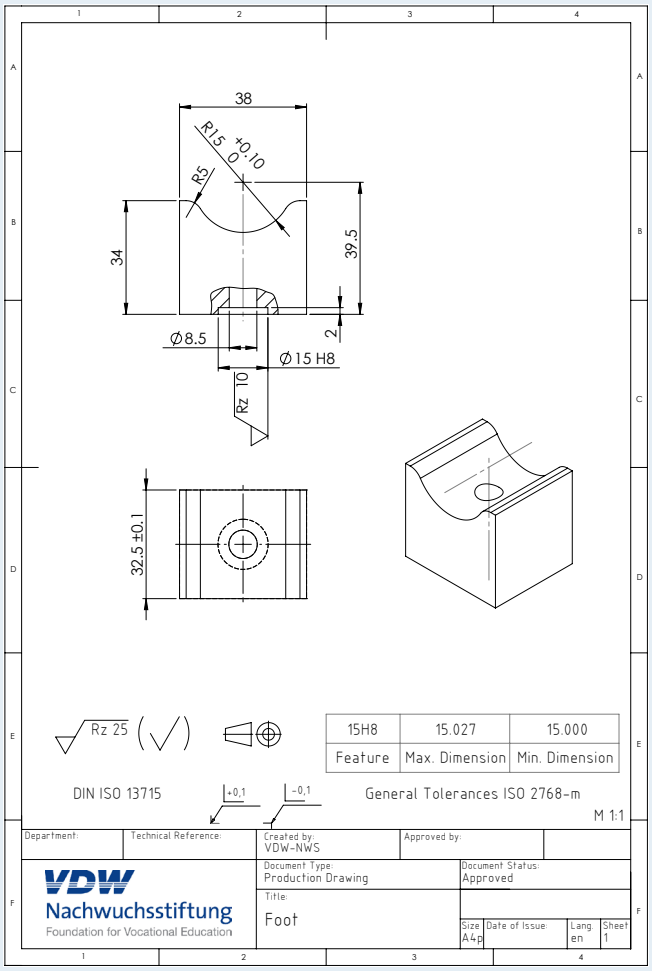

On the following pages, an example part is used to illustrate the steps that are necessary to complete this task.

- The manufacturing task for the component *Foot* can be effectively performed by first completing the example.

Notes

Chapter 1

Manufacturing with SolidCAM

Notes

Course_Materials
Part file: Hinge Block
Drawings > PDFs

Example Part: Hinge Block

All the steps needed to complete the manufacturing task, from creating the CAM program to generating the GCode file, are shown in this example.

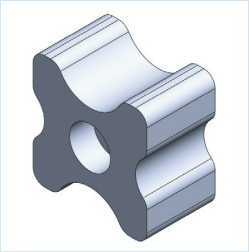

Using SolidCAM, create the CAM program for the manufacturing of the example part *Hinge Block*.

Document the results of your work.

1.1 CAD/CAM Basics

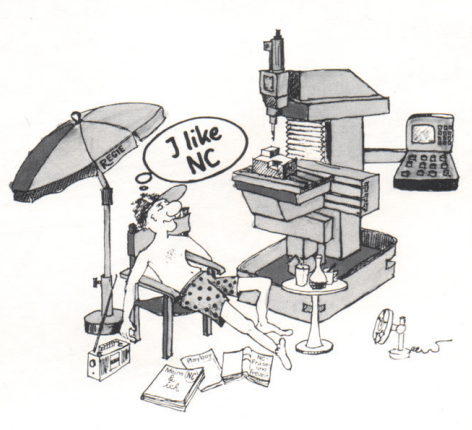

In the following lessons, SolidCAM's 2.5D Milling technologies are used to complete the CNC programs.

As the leading CAD/CAM solution, SolidCAM provides a seamless, single-window integration and full associativity to the SolidWorks design model. All machining operations are defined, calculated and verified, without leaving the SolidWorks window. With SolidCAM, you can turn parts built with SolidWorks into GCode for any CNC-Machine.

In this process of modelling to manufacturing, geometries are defined in an operation (e.g., Profile, Pocket, Drilling, etc.) to determine where the model will be machined. The tools required for cutting can be assigned to and selected from libraries. Typical sources of errors such as missing data or entering incorrect coordinates are avoided through the seamless transfer of values from SolidWorks. Any changes in the SolidWorks design model are automatically detected and the tool paths are adjusted. Due to the integration and transfer of CAD data, even the often costly repairs of surface defects can be avoided.

Other CAD Systems can also be used for modelling. Once created, your 3D model geometries can be imported for programming into a fully functional CAD/CAM system offered by SolidCAM.

After the programming, the tool path can be simulated and possible collisions with the workpiece can be checked in SolidCAM. The workholding is included in the collision checking. Programming errors can be detected and fixed at an early stage.

In the Simulation, the Rest material is also detected and can be displayed. SolidCAM enables you to see the wireframe tool path on the model, the cutting tool as it moves through the solid stock material, and a machining simulation using the kinematics of the CNC-Machine.

After a successful simulation of the tool path, SolidCAM enables you to generate the GCode specific to your CNC-Machine Controller (e.g., Siemens or Heidenhain). Through the entire process, the programmer is able to continue working in SolidCAM. For manufacturing preparations in general, this allows for a great deal of flexibility.

By selecting the post-processor in the CAM System, the generated GCode can be used to manufacture the workpiece on different machines with various controls.

The final GCode can be sent to the machine via a flash drive or network. The machine operator prepares the machine and the workpiece. The tools are prepared according to the Tool Sheet. Once everything is set up, the manufacturing can begin.

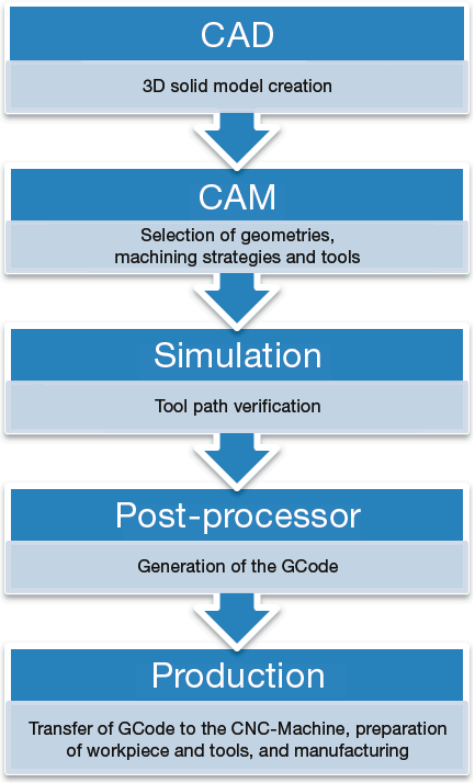

Notes

Notes

1.2 Programming in SolidCAM

Step 1:	■ Open the part in SolidWorks and start SolidCAM.
Step 2:	■ Determine where the CAM data will be stored and create the CAM-Part.
Step 3:	■ Select the CNC-Machine Controller to start the CAM-Part Definition.
Step 4:	■ Define the Coordinate System (origin for all machining operations of the CAM-Part).
Step 5:	■ Define the Stock model and Target model.
Step 6:	■ Add the operations required to machine the part.
Step 7:	■ Generate the GCode.
Step 8:	■ Send the GCode to the machine.

Depending on the CAM Settings, it is possible to skip steps 2, 3, 4 and 5. However, it is recommended to become familiar with the CAM-Part Definition before having SolidCAM automate the process for you.

In the SolidCAM Settings, make sure that the following CAM-Part options are disabled:

- Auto select project location
- Options listed in the Automatic CAM-Part definition settings:
  1. *Definition of CNC-Controller*
  2. *Definition of CoordSys*
  3. *Create machine setup*
  4. *Definition of Stock*
  5. *Definition of Target*

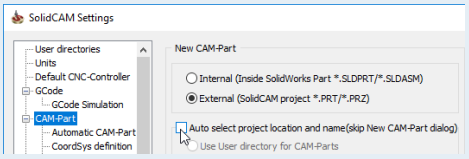

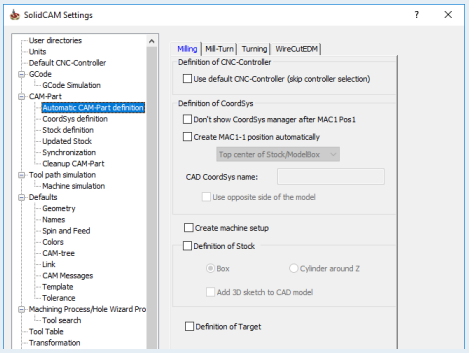

While in the SolidCAM Settings, also disable the option *Create new CAM-Parts in compressed mode*. You will need to access the CAM-Part folders in the upcoming exercises.

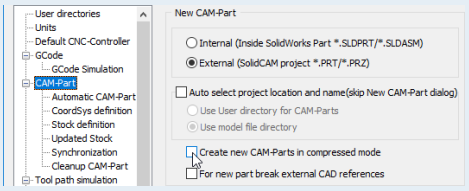

1.3 Creating and Defining the CAM-Part

Step 1:
Open the part in SolidWorks and start SolidCAM.

- Start SolidWorks and then open the example part *Hinge Block.SLDPRT*.
- In the SolidWorks Menu Bar, click *Tools* > *SolidCAM* > *New* > *Milling*.

SolidCAM is started. You can also use the available toolbars to start SolidCAM and the CAM-Part creation (i.e., using the SolidCAM New toolbar).

In the next four steps, the CAM-Part will be created and defined.

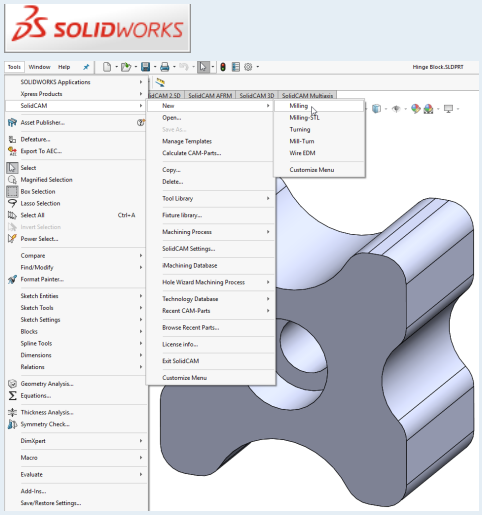

1.3.1 Determining the Directory for Saving the CAM-Part

Step 2:
Determine where the CAM data will be stored and create the CAM-Part.

- Define the following:
  - External or Internal mode to create the CAM-Part. All parts will be created using the *External* mode. All CAM data is stored within the SolidCAM project.
  - CAM-Part name defines the new SolidCAM file name (defaults to the SolidWorks part name).
  - Directory defines the location to store the CAM-Part (*Use Model file directory* is the default location).
  - Model name shows the path to the SolidWorks part.
  - *Metric* should be used for Units.

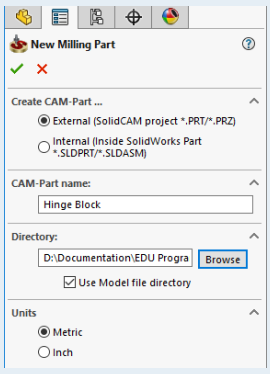

- Click *OK* to confirm your entries.

Notes

Notes

1.3.2 Selecting the CNC-Machine Controller

Step 3:
Select the CNC-Machine Controller.

After the CAM-Part is created, the Milling Part Data dialog box appears. This dialog box enables you to complete the CAM-Part Definition.

- Select the CNC-Machine Controller.
- Click the drop-down menu to display a list of post-processors that are currently installed on the system.

For the purpose of this exercise, the machining will be performed on a 3-Axis milling machine with a Heidenhain control.

- Choose *Heidenhain_iTNC530_3X* post-processor from the list.

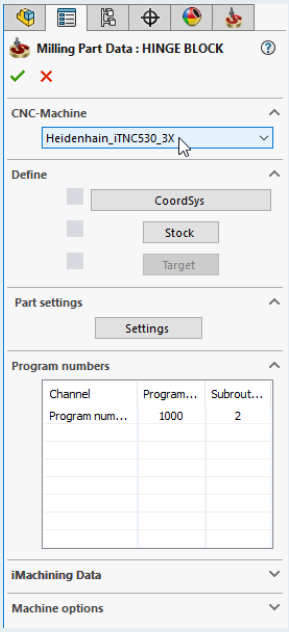

1.3.3 Defining the Machine Coordinate System

Step 4:
Define the Coordinate System.

The SolidCAM Coordinate System

SolidCAM changes the orientation of the model to the CAM Isometric view. This orientation is suitable for machining on a CNC-Machine (with the Z-Axis pointing vertically upwards).

- Use the SolidCAM Views on the SolidCAM toolbars to see the SolidCAM Coordinate System.

These views are related to the orientation of the selected CoordSys position.

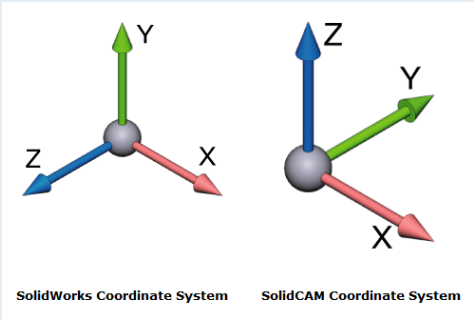

To complete the CAM-Part Definition, you need to define at least one Machine Coordinate System.

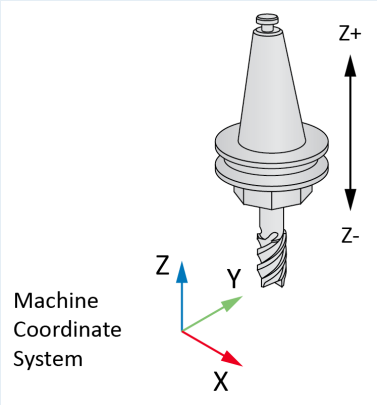

The Machine Coordinate System defines the origin for all machining operations of the CAM-Part. It corresponds with the built-in Controller functions (e.g., G54).

The Z direction of the Machine Coordinate System is parallel to the revolution axis of the tool.

In SolidCAM, the tool approaches from the positive direction of the Z-Axis (like on a vertical CNC-Machine).

For 3-Axis milling machines, each Machine Coordinate System means separate clamping.

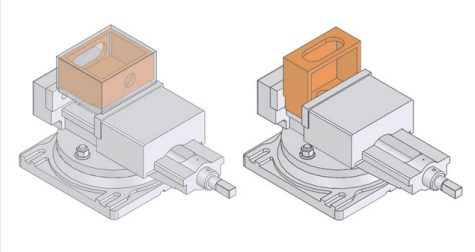

If you need to machine the part from different sides, use several Machine Coordinate Systems with the Z-Axis oriented normally (perpendicular) to the machined sides.

- To start the Coordinate System definition, click the *CoordSys* button to display the CoordSys dialog box.

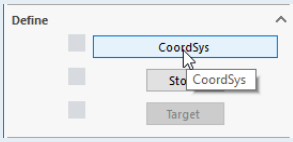

The Coordinate System can be defined directly on the solid model. You can define the origin position and axes orientation by selecting model faces, vertices, edges, or already defined SolidWorks Coordinate Systems.

The machining geometries will also be selected directly on the solid model.

We will start with the Coordinate System definition.

Notes

Notes

The CoordSys dialog box enables you to define a new Coordinate System directly on the solid model.

Each newly created Coordinate System automatically receives the next sequential number.

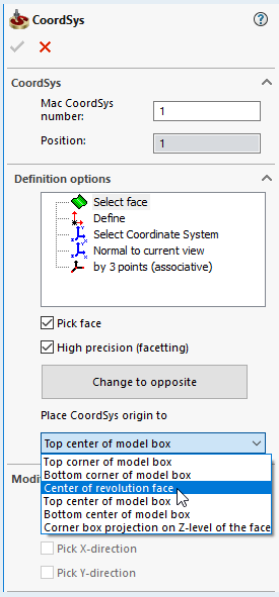

- In the Definition options area, choose the *Select face* option and in the Place CoordSys origin to drop-down menu, select *Center of revolution face* from the list.

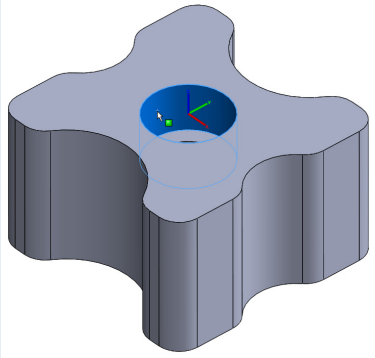

- Pick on the cylindrical surface of the counterbore as shown.

The Z-Axis of the Coordinate System is made parallel to the revolution axis of the counterbore and the origin is centered (X0, Y0) on top of the part.

In the first setup, the outside contour is machined and the counterbore drilled.

- To confirm the Coordinate System definition, click *OK*.

The CoordSys Data dialog box is displayed.

This dialog box enables you to define the Default machining levels such as the Tool start level, the Clearance level and the Part Upper level.

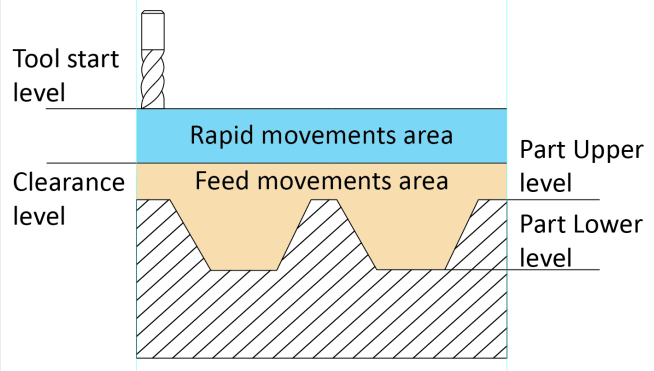

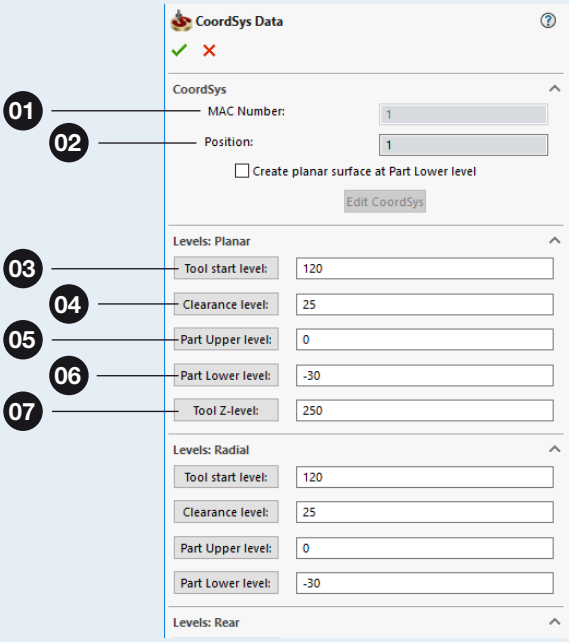

No.	Parameter	Description
01	Machine CoordSys Number	Displays the number of the CoordSys in the CNC-Machine. The default value is 1 (G54). If you use another number, the GCode file contains the G-function that prompts the machine to use the specified number stored in the Controller.
02	Position	Displays the sequential number of the CoordSys. For each Machine Coordinate System, several Position values are defined for different positionings; each such Position value is related to the Machine CoordSys. • X shows the X-value of the CoordSys • Y shows the Y-value of the CoordSys • Z shows the Z-value of the CoordSys
03	Tool start level	Defines the Z-level at which the tool starts working.
04	Clearance level	Defines the Z-level to which the tool moves rapidly from one operation to another (if there is no tool change).
05	Part Upper level	Defines the height of the part upper surface to be milled.
06	Part Lower level	Defines the part lower surface level to be milled.
07	Tool Z-level	Defines the height to which the tool moves before the rotation of the 4/5 axes to avoid collision between the tool and the workpiece. This level is related to the CoordSys position and you have to verify that it does not exceed the limit of the machine. It is highly recommended to send the tool to the reference point or to a point related to the reference point.

Notes

Notes

- To accept the Default machining levels and close the CoordSys Data dialog box, click *OK*.

The CoordSys Manager dialog box is displayed in the PropertyManager area of SolidWorks. The defined Machine Coordinate System is shown.

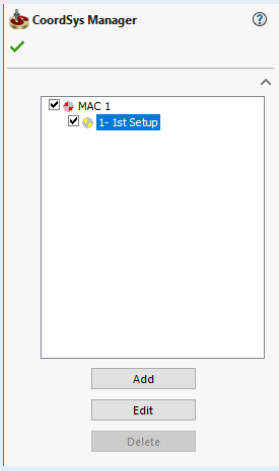

- Change the name of the origin position to *1st Setup* (RM click *1- Position* and choose *Rename*).

- Click *OK* to confirm the Machine Coordinate System and to close the CoordSys Manager dialog box.

The Milling Part Data dialog box is displayed again.

1.3.4 Defining the Stock and Target Models

Step 5:
Define the Stock and Target models.

Stock Model Definition

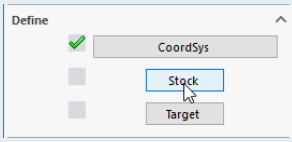

- In the Milling Part Data dialog box, click the *Stock* button.

The Stock dialog box is displayed, which enables you to choose the method of the Stock model definition.

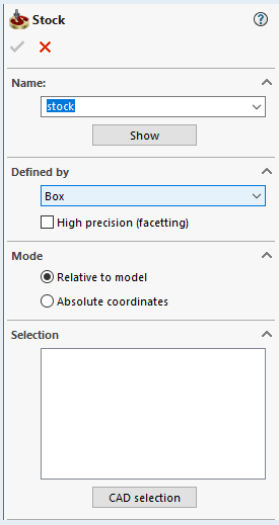

In the Defined by drop-down menu, the following Stock model definition methods are available for selection:

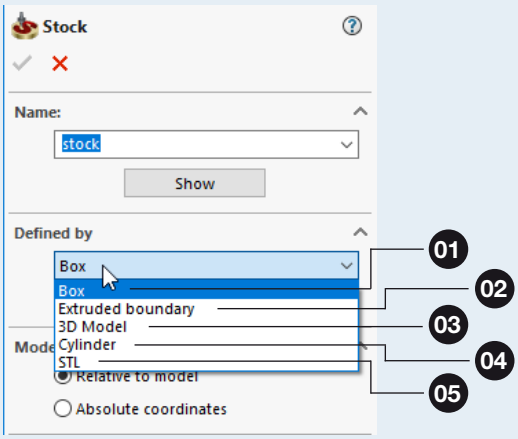

No.	Method	Description
01	Box	This option enables you to define the Stock model as a box surrounding the selected Target model.
02	Extruded boundary	This option enables you to define the Stock model as a closed wireframe geometry chain using one of the model sketches in the XY-plane. The chain is extruded by the Z-Axis to define the Stock model.
03	3D Model	This option enables you to define the Stock model via 3D solid model selection, which can be useful when machining castings.
04	Cylinder	This option enables you to define the Stock model as a cylinder (or tube) surrounding the selected Target model.
05	STL	This option enables you to define the Stock model based on an existing STL file.

- Select *Box* from the list.

Optionally, you can define offsets that are relative to the model.

- In the Expand box at area, specify an offset of 1 mm (0.04 in) for the X+, X-, Y+, Y- and Z+ directions. Specify a Z- offset of 6 mm (0.25 in).

- Now pick on the solid body in the SolidWorks Graphics Area.

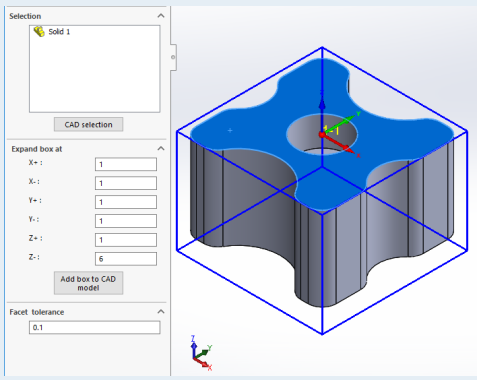

Notes

Notes

SolidCAM automatically generates a box surrounding the solid body, which defines the geometry of the Stock model. By clicking *Add box to CAD model*, the surrounding box is displayed at all times as a 3D sketch.

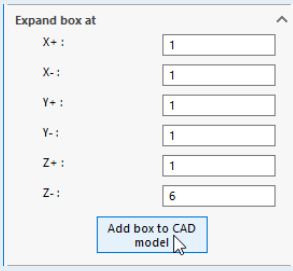

- Click *OK* to confirm the Stock model definition.

The Milling Part Data dialog box is displayed again.

Target Model Definition

SolidCAM enables you to define the Target model, which is the final shape of the CAM-Part after the machining. The Target model is used for gouge checking in the SolidVerify simulation.

- In the Milling Part Data dialog box, click the *Target* button.

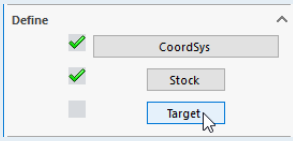

The Target dialog box is displayed, which enables you to define the Target model via the 3D Model selection method.

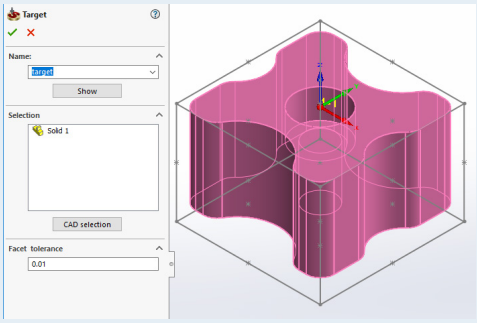

Depending on the CAM Settings, the Target model may already be defined by default.

- If the Target model is already defined, pick on the solid body to clear the selection.

- Pick on the solid body once again.

The *Solid 1* icon appears in the Selection area.

- Set the Facet tolerance parameter to 0.01 mm (0.0004 in). This is the recommended value.

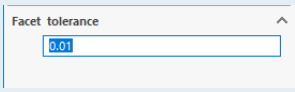

In some operations, the Target model can be used to define the geometry.

The Facet tolerance parameter defines the accuracy of triangulation of the Target model. This parameter can also be defined for the Stock model as well as any clamping devices. The triangulated models are used later in the SolidVerify simulation. The smaller the tolerance, the better the quality of the Target model visualization.

- Click *OK* to confirm the Target model definition.

1.4 Saving the CAM-Part

- Confirm the CAM-Part Definition by clicking *OK*.

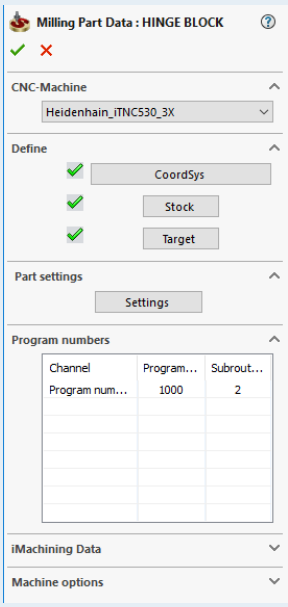

The Milling Part Data dialog box is closed and the SolidCAM Manager is displayed. The CAM-Part is saved and stored in the specified directory. At this stage, the definition of the CAM-Part is finished.

SolidCAM generates and works with a copy of the original SolidWorks model.

Any modifications to the original model are automatically detected, and SolidCAM prompts you to accept the changes within the CAM-Part. The changes will be applied to the copied model (DesignModel.SLDPRT), but you must also perform a synchronization in order to have the associated CAM data automatically adjusted.

Notes

Notes

SolidCAM uses the SolidWorks part name for the CAM-Part name but with all capital letters. A SolidCAM part uses the *.prt file extension (*.prz if compressed mode is chosen). SolidCAM also creates a SolidWorks assembly that has the same name as the CAM-Part with a *.SLDASM file extension. Using the assembly environment in SolidWorks, SolidCAM enables you to create auxiliary geometries (e.g., sketches) without making changes in the original model. You also have the ability to insert some additional components into the assembly file such as a Stock model, CNC-Machine table, fixture and other tooling elements.

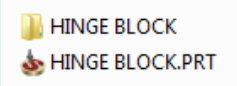

1.5 SolidCAM User Interface

The SolidCAM Manager tree is the main interface feature of SolidCAM.

It is located on the left side of the SolidWorks display window (same as the FeatureManager, PropertyManager or ConfigurationManager).

All the CAM-Part information is displayed in the SolidCAM Manager.

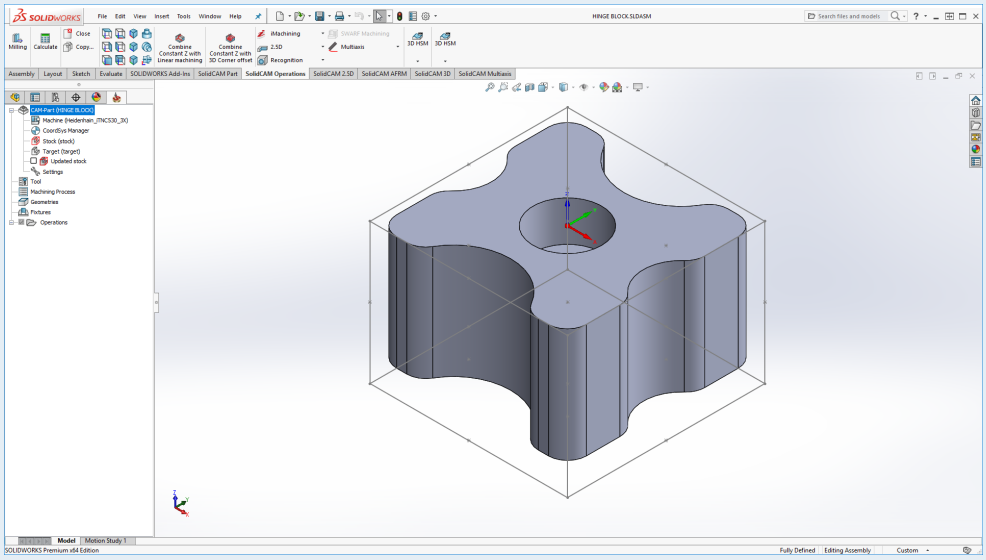

Important:
SolidCAM is always working with a copy of the original SolidWorks model. This ensures that the original model cannot be easily changed. SolidCAM performs a date/time comparison to recognize any later changes.
If changes do occur to the original model, the message shown on the right will appear upon opening the CAM-Part. If you click *Yes*, the changes are reflected in the copy and a synchronization will need to be performed as well as a recalculation of any added machining operations.

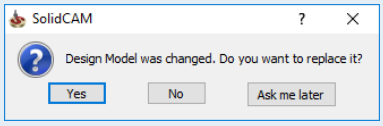

The SolidCAM Manager contains the following headers:

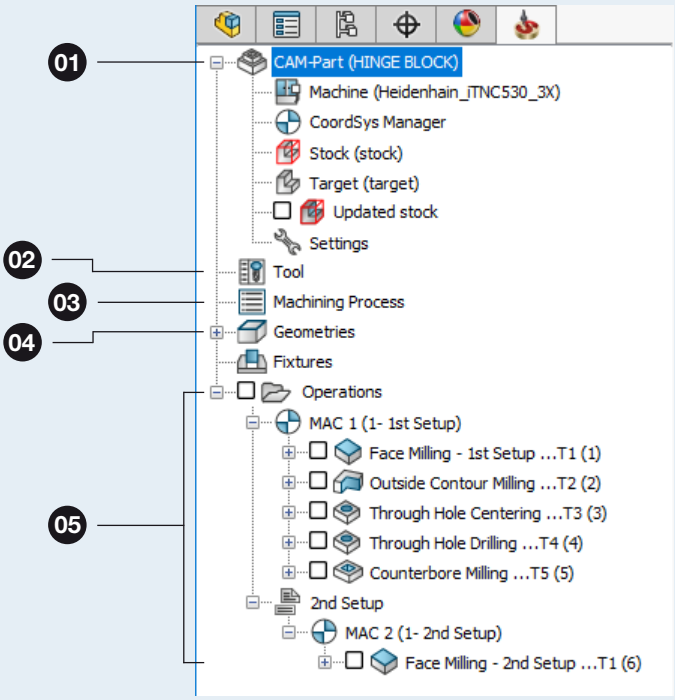

No.	CAM Manager Header
01	CAM-Part
02	Tool
03	Machining Process
04	Geometries
05	Operations

Notes

Notes

Exercise

- Complete the table below with the corresponding SolidCAM Manager element names and explain their meaning by searching the SolidCAM Help Topics.

No.	CAM Manager Element	Description
01	CAM-Part	

Step 6:
Add the operations required to machine the part.

1.6 Adding a Face Milling Operation (1st Setup)

- In the SolidCAM Manager, RM click the *Operations* header and choose *Face...* from the *Add Milling Operation* submenu.

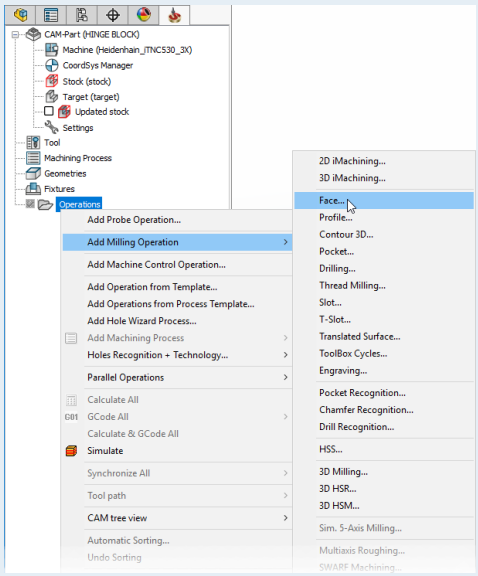

Operations can also be added by using the SolidCAM toolbars of the SolidWorks CommandManager.

The Operation Interface

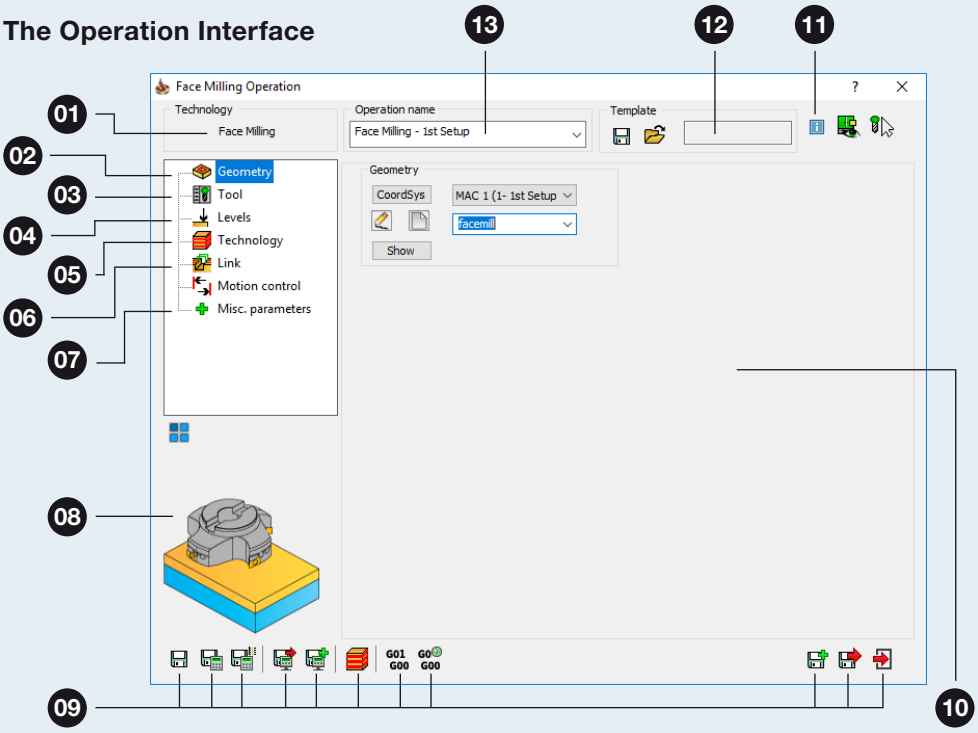

No.	Interface Element	Description
01	Technology	Displays the chosen technology according to the operation type.
02	Geometry parameters	This page enables you to define the geometry for the operation.
03	Tool parameters	This page enables you to define the tool for the operation.
04	Levels parameters	This page enables you to define the machining levels for the operation.
05	Technology parameters	This page enables you to define the technological parameters such as offsets, roughing and finishing data, depth type, etc.
06	Link parameters	This page enables you to define the approach and retreat of the tool, linking between tool paths, etc.
07	Miscellaneous parameters	This page contains the miscellaneous parameters such as Message, Extra parameters, and so forth.
08	Parameter illustration	Displays an illustration of the active item to facilitate the definition of the corresponding parameter.
09	Operation buttons	Enable you to perform the functions of an operation such as Save & Calculate, Simulate, etc.
10	Parameters page	Displays the parameters of the active item from the list on the left hand side of the dialog box.
11	Info	Enables you to display a window that contains the information summary of the operation.

Notes

Notes

No.	Interface Element	Description
12	Template	Enables you to save the current operation as a template and to load another already existing template.
13	Operation name	Displays the operation name and enables you to choose another already existing operation as a template.

The Face Milling Operation dialog box is displayed.

- In the Operation name field, enter *Face Milling - 1st Setup*.

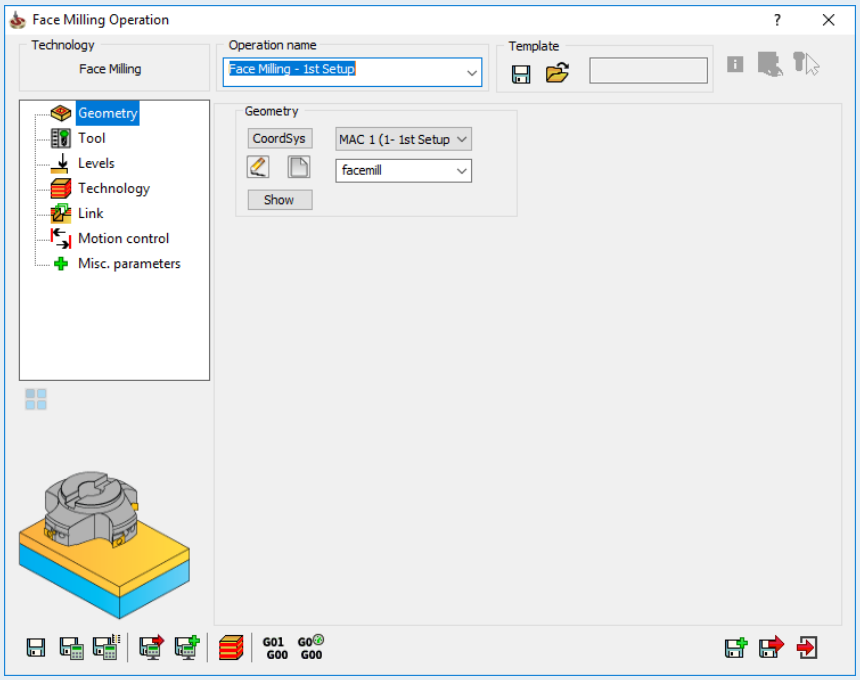

Upon adding a Face Milling operation, if the Target model is defined in the CAM-Part, the geometry definition is automatically generated using the *Model* method by default. This method generates a rectangular box in the XY-plane surrounding the Target model and selects it for the Face Milling geometry. By clicking the *Show* button, the geometry chain can be viewed on the model in the Graphics Area.

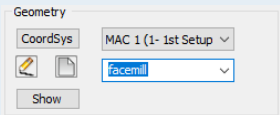

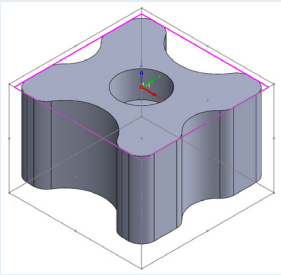

If necessary, the default Face Milling geometry can be edited by clicking the *Edit* button.

1.6.1 Defining the Tool

For the next step, you must define the tool for the Face milling.

- Switch to the *Tool* page to start the Tool definition.

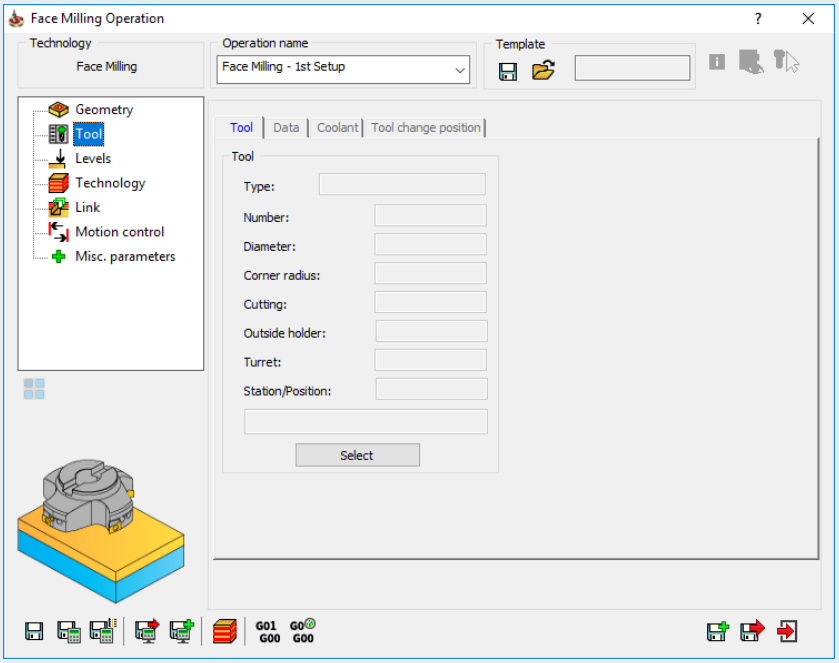

- Click the *Select* button to display the Choosing tool for operation dialog box with Part Tool Table.

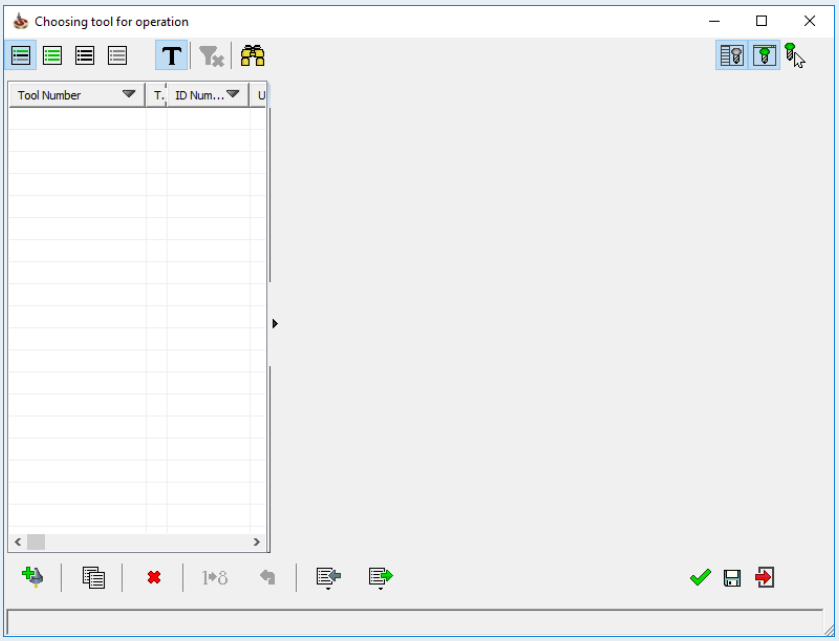

Notes

Notes

The Part Tool Table contains all tools available for use to machine the current CAM-Part. The Part Tool Table is stored within the CAM-Part.

The Choosing tool for operation dialog box enables you to manage the tools contained in the Part Tool Table.

Depending on the CAM Settings, SolidCAM may load default tools into the Part Tool Table according to the Operation default templates.

For the purpose of this exercise, the default templates are deactivated, leaving the current Part Tool Table empty. A new tool suitable for face milling must now be defined.

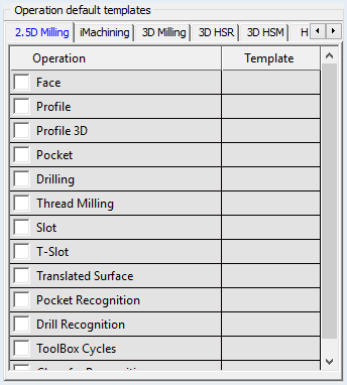

- Click the *Add Milling Tool* button to define a new tool.

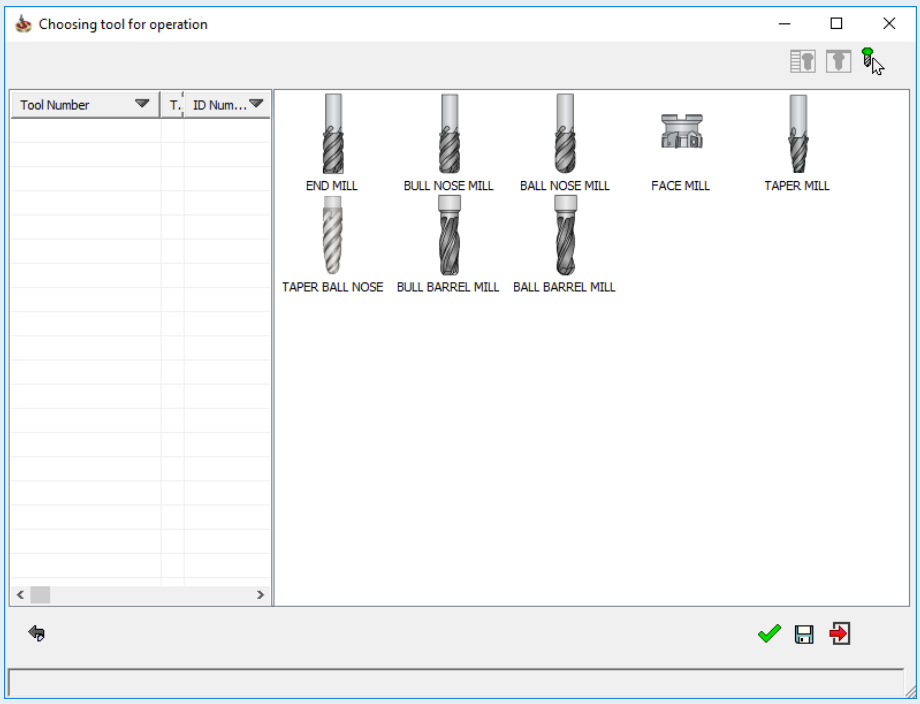

On the right, a new pane containing the available tools is displayed.

This dialog box enables you to add a new tool to the Tool Library by choosing from those that are available for the current operation.

- Choose *FACE MILL* from the list and then enter the Tool parameters as shown on the Topology tab below.

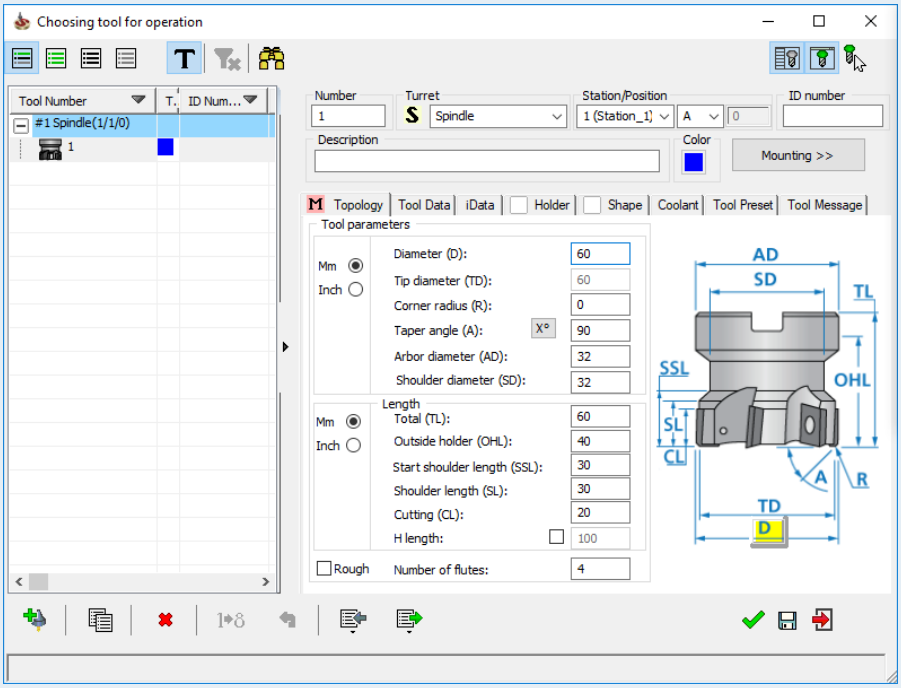

- Click the *Select* button to confirm the Tool parameters and choose the tool for the operation.

The Tool page of the Face Milling Operation dialog box is displayed.

Feed and Speed Definition

The Data tab of the Tool page enables you to define the Feed, Spin and Offsets of the tool chosen for the operation.

When the tool is chosen for the operation, SolidCAM fills the fields with the default cutting data. This tab enables you to edit the data for the current operation only.

Notes

Notes

- Switch to the *Data* tab to define the cutting data of the tool.

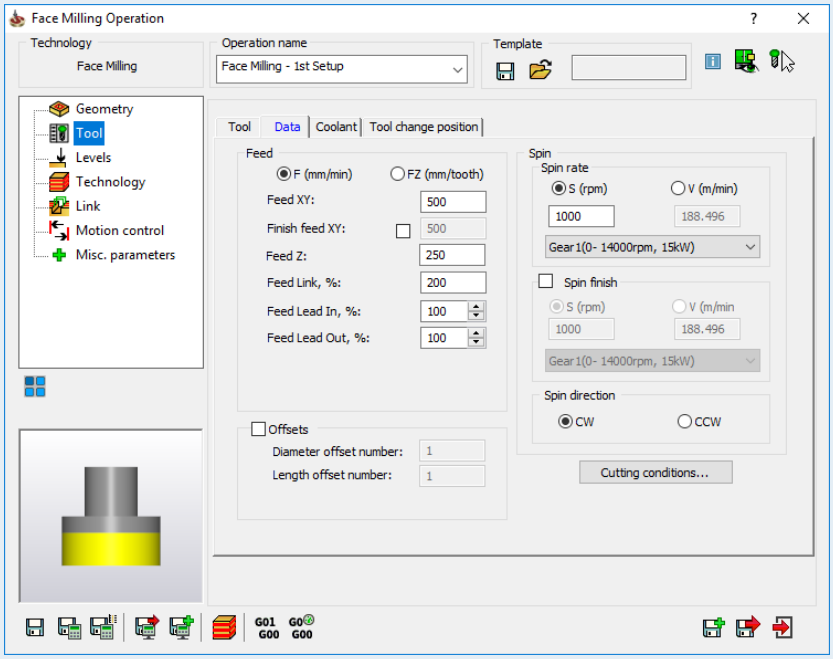

- Enter a Spin rate value of 1000 rpm.

- For Feed XY, enter 500 mm/min (20 in/min) and for Feed Z, enter 250 mm/min (10 in/min).

- If enabled, deselect both the *Finish feed XY* and *Spin finish* override check boxes.

1.6.2 Defining the Levels

For the next step, you must define the Milling levels for the operation.

SolidCAM enables you to define the levels using the solid model data. You can specify the Z-levels at which the tool movements are executed with the following parameters:

- *Upper level* – Defines the Z-level at which the machining will start.
- *Lower level* (*depth*) – Defines the Z-level below which the tool will not machine. This plane is not penetrated in any milling strategy.

In addition to the Positioning levels, which are set according to the default values specified in the CoordSys Data dialog box, you have to define the Upper level and Face depth.

- Switch to the *Levels* page to specify the Z-levels at which the tool movements are executed.

- Click the *Upper level* button.

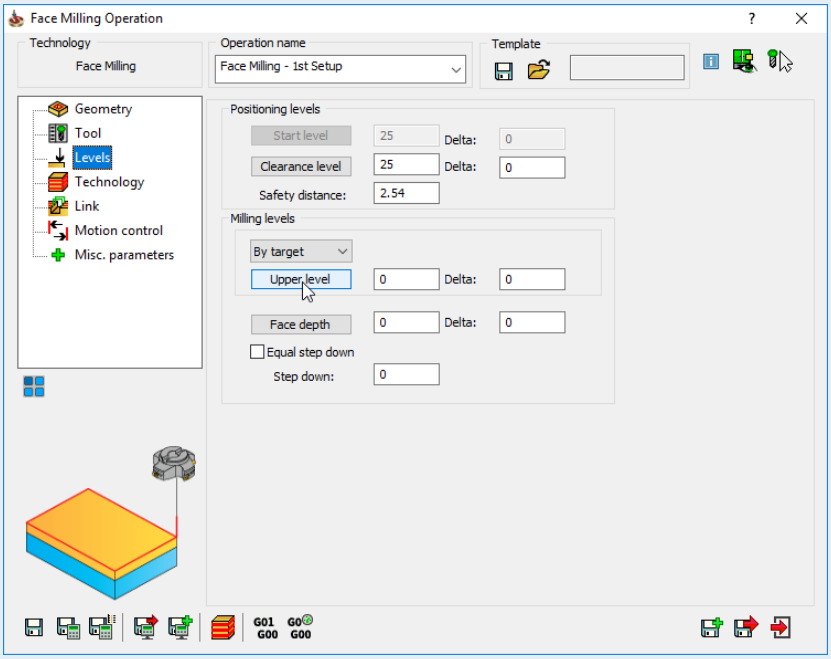

- In the SolidWorks Graphics Area, pick on the top corner of the 3D sketch as shown.

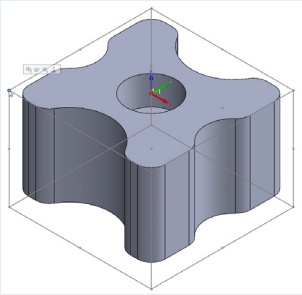

- To confirm the selection and close the Pick Upper level dialog box, click *OK*.

- Click the *Face depth* button.

- Pick on the top face of the solid model as shown.

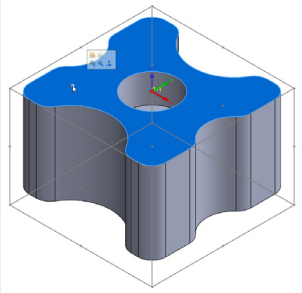

- To confirm the selection and close the Pick Lower level dialog box, click *OK*.

Notes

Notes

1.6.3 Defining the Technology

- Switch to the *Technology* page to define the technological parameters of the Face Milling technology.

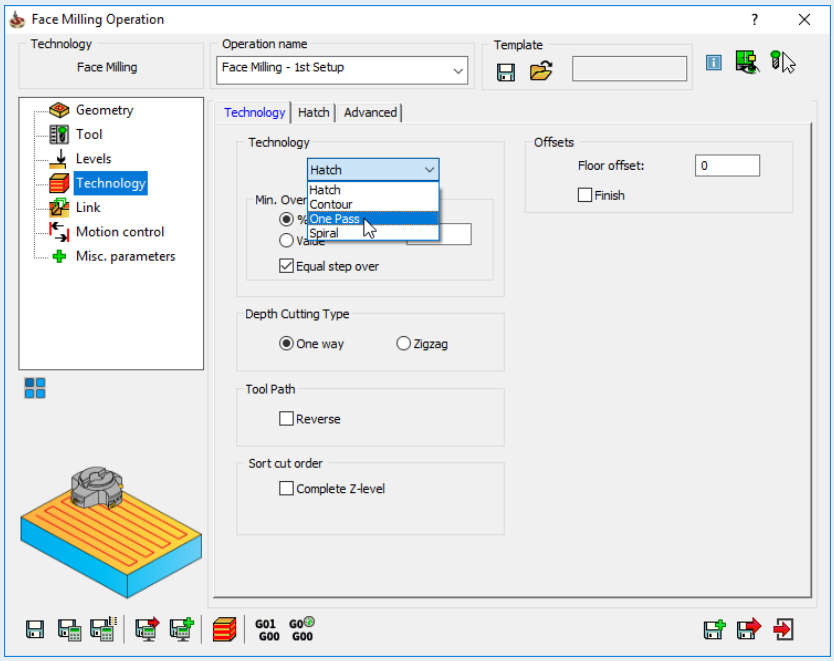

- Since the tool is wider than the workpiece, choose the *One Pass* strategy for the Technology.

- In the Extension area of the One Pass tab, enter a value of 10 for the % of tool diameter parameter.

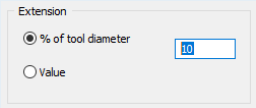

This means that the tool path will be extended over the face edges by 10% of the tool diameter. Thus, there is no need to define any Lead in or Lead out parameters on the Link page.

- Click *Save & Calculate* to save the Face Milling operation data and calculate the tool path.

- When prompted by the message shown, click *Yes* to confirm that the Upper level is above CoorSys Upper level; OK?

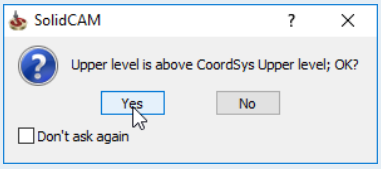

1.6.4 Simulating the Operation

The SolidCAM Simulation option enables you to check and view the generated tool path after you have defined and calculated your machining operations. Simulation helps you to avoid problems such as mistakes in the definition of an operation or the selection of an unsuitable milling strategy that you would otherwise experience during the actual production run.

- Click *Simulate*.

- If you have already closed the Face Milling Operation dialog box, RM click the operation name in the SolidCAM Manager tree.

- Choose *Simulate* from the appearing operation shortcut menu.

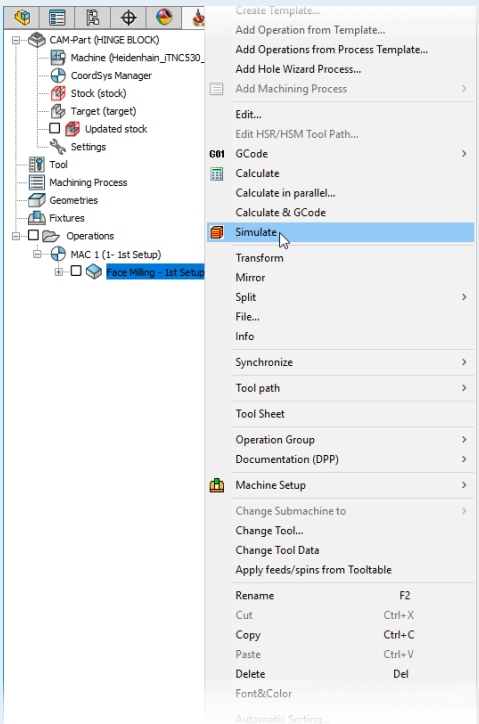

The Simulation window appears, which enables you to choose and control the different modes of simulation that are offered by SolidCAM.

- Click the *Show data* button to display additional tool path information such as coordinates of the current point, time, feed in the Simulation Data dialog box.

Notes

Notes

The Simulation Control Panel

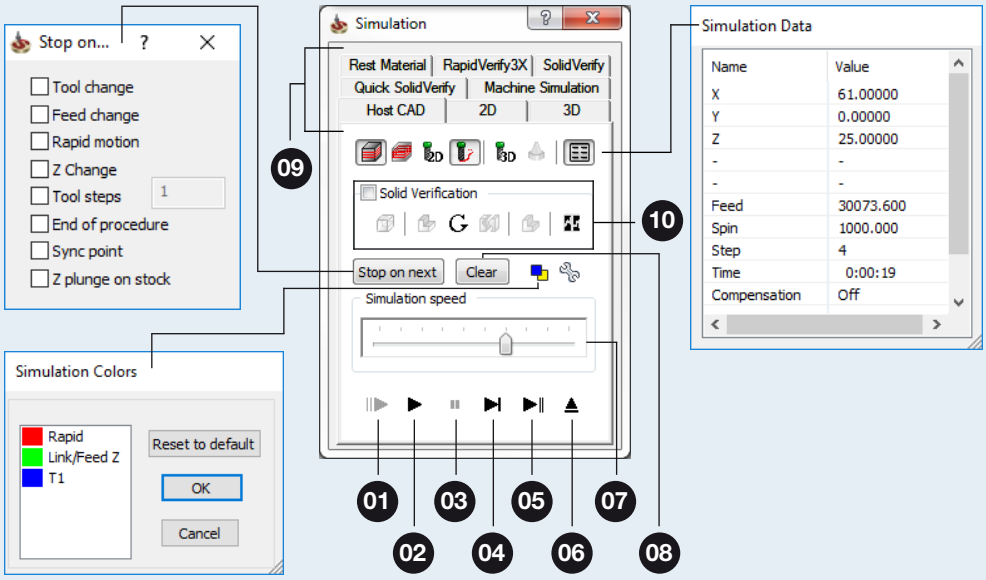

No.	Interface Element	Description
01	Turbo	Simulation is performed in the computer memory without showing on the screen. The image is shown when the simulation is completed or when you click Pause.
02	Play	Simulation is played in continuous mode.
03	Pause	Simulation is paused when played in the continuous, Turbo, or Operation step modes.
04	Single step mode	Simulation is performed step by step and then stops according to each tool movement. To simulate the next step, click this button again or press the spacebar on your keyboard.
05	Operation step mode	Simulation is performed continuously until it reaches the end of an operation. For example, click this button to play through only the first operation. Click it again to play through only the second operation, and so forth.
06	Exit	This button closes the Simulation control panel.
07	Simulation speed slider	This slider controls the speed of simulation.
08	Clear	This button clears the simulated tool path.
09	Simulation modes	These tabs enable you to switch between the available SolidCAM Simulation modes.
10	Solid Verification	These options enable you to display the machining simulation directly on the solid model in the SolidWorks Graphics Area.

- Switch to the *SolidVerify* tab and then start the simulation by clicking the *Play* button.

The Face Milling operation is now simulated in SolidVerify.

- Close the Simulation control panel with the *Exit* button.

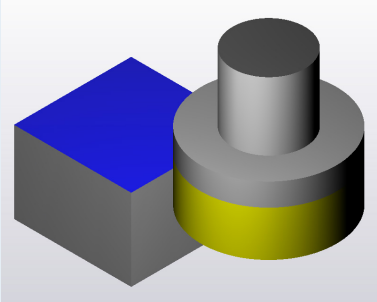

Notes

1.7 Adding a Profile Operation

The outside contour of the workpiece should be machined next.

- In the SolidCAM Manager, RM click either the *Operations* header or the last operation in the CAM tree.

- Choose *Profile...* from the *Add Milling Operation* submenu.

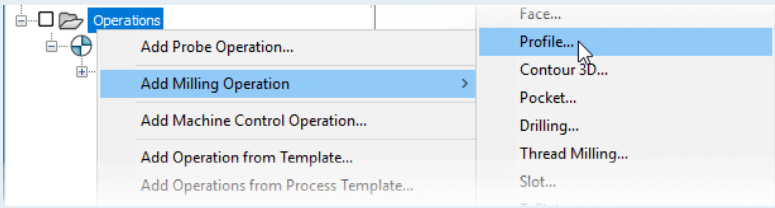

- In the Operation name field, enter *Outside Contour Milling*.

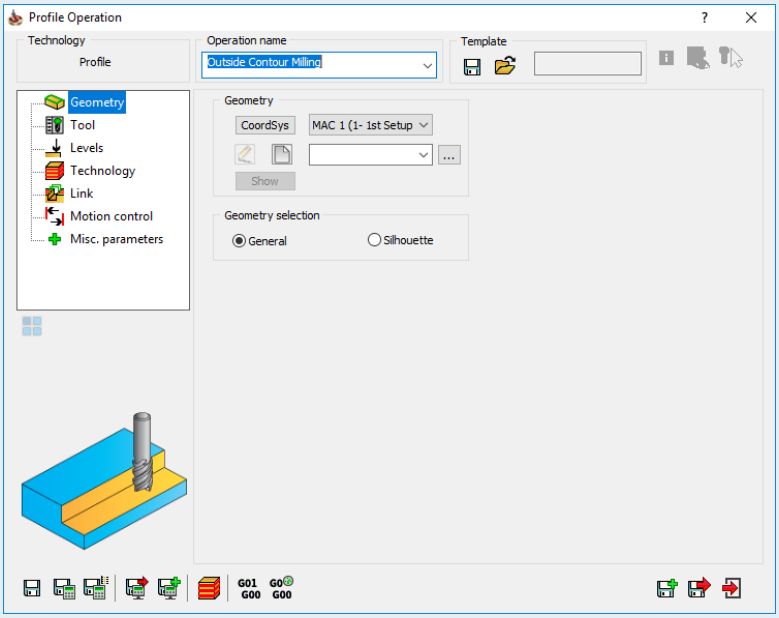

Notes

- On the Geometry page, click the *New* button to define the machining geometry.

- Pick on the top edge of the solid model as shown.

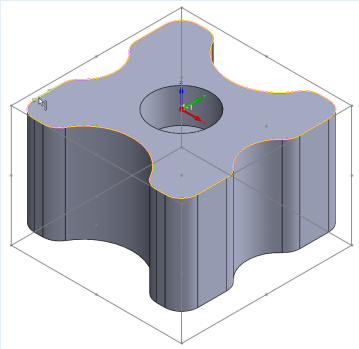

The arrow at the chain start point indicates the geometry direction.

In SolidCAM operations, the direction of the chain geometry is used for the tool path calculation.
In Profile milling, the tool moves in the direction of the geometry by default.
In this exercise, the combination of the geometry direction and the clockwise direction of the tool revolution enables you to perform climb milling.

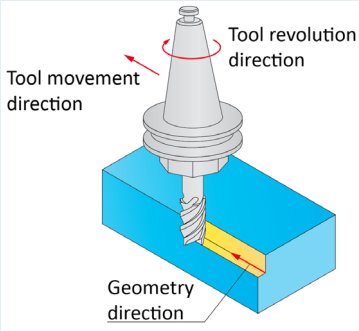

To simplify your selections, SolidCAM automatically connects all entities on the same Z-level to close the chain.

The confirmation message OK to accept? is displayed.

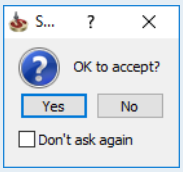

- If you have to modify the chain such as reverse the direction, you can click *No* and use the chain buttons in the Chain List area.

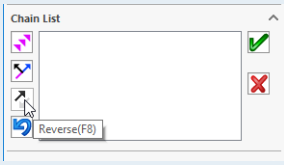

- For this exercise, the chain does not need to be modified. Click *Yes* to accept the selection.

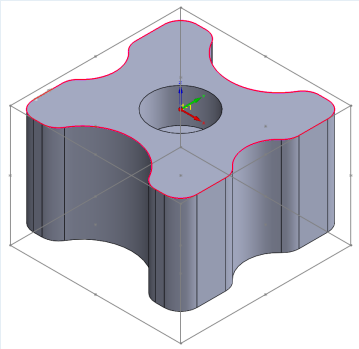

The chain icon *1-Chain* appears in the Chain List.

The Chain List enables you to manage the existing chains of the current Geometry definition. To edit, RM click the chain and choose the appropriate command (*Replace*, *Insert*, *Edit*, *Reverse*, etc.) from the appearing shortcut menu.

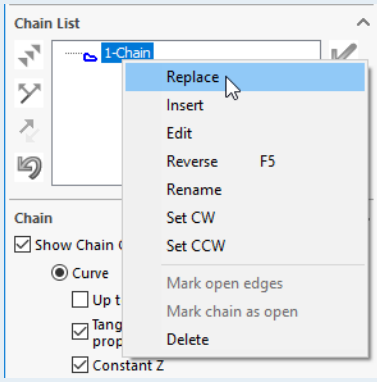

- In the Name field, change the name to *Outside Contour*.

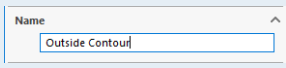

- Confirm the Geometry definition by clicking *OK*.

The Profile Operation dialog box is displayed again.

1.7.1 Defining the Tool

For the next step, you must define the tool for the Profile milling.

- Switch to the *Tool* page and then click the *Select* button to start the Tool definition.

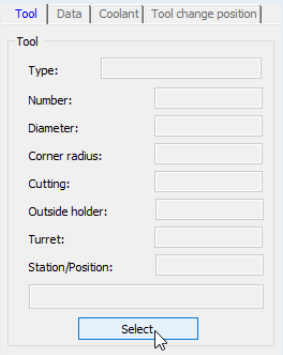

The Part Tool Table is displayed. Only the tool used in the previous operation is listed, which would not be suitable for Profile milling.

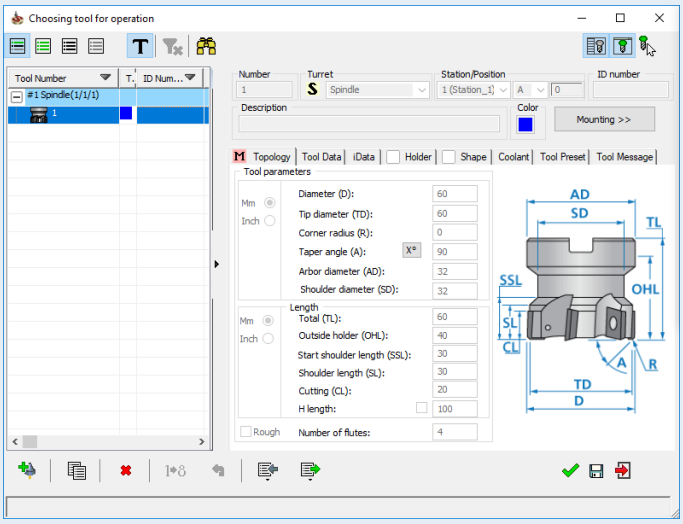

Notes

Notes

- Click the *Add Milling Tool* button to define a new tool.

- Choose *END MILL* from the list.
- Set the Diameter to 20 mm (0.75 in).
- Set the Shoulder length (SL) to 40 mm (1.575 in) and the Cutting length (CL) to 35 mm (1.375 in).

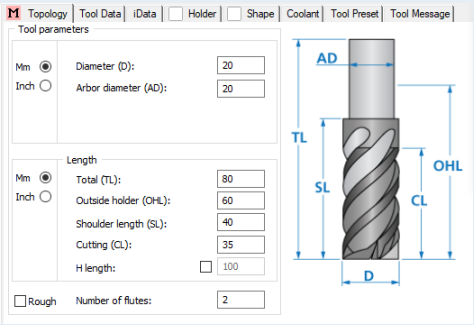

- Click the *Select* button to confirm the Tool parameters and choose the tool for the operation.

The Tool page of the Profile Operation dialog box is displayed.

Feed and Speed Definition

- Switch to the *Data* tab to define the cutting data of the tool.

The default cutting data is displayed.

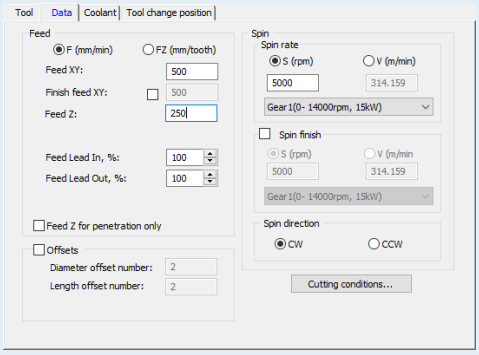

- Enter a Spin rate value of 5000 rpm.
- For Feed XY, enter 500 mm/min (20 in/min) and for Feed Z, enter 250 mm/min (10 in/min).
- If enabled, deselect both the *Finish feed XY* and *Spin finish* override check boxes.

1.7.2 Defining the Profile Depth

For the next step, you must define the Milling levels for the operation.

- Switch to the *Levels* page to specify the Z-levels at which the tool movements are executed.

- In the Milling levels area, click the *Upper level* button.

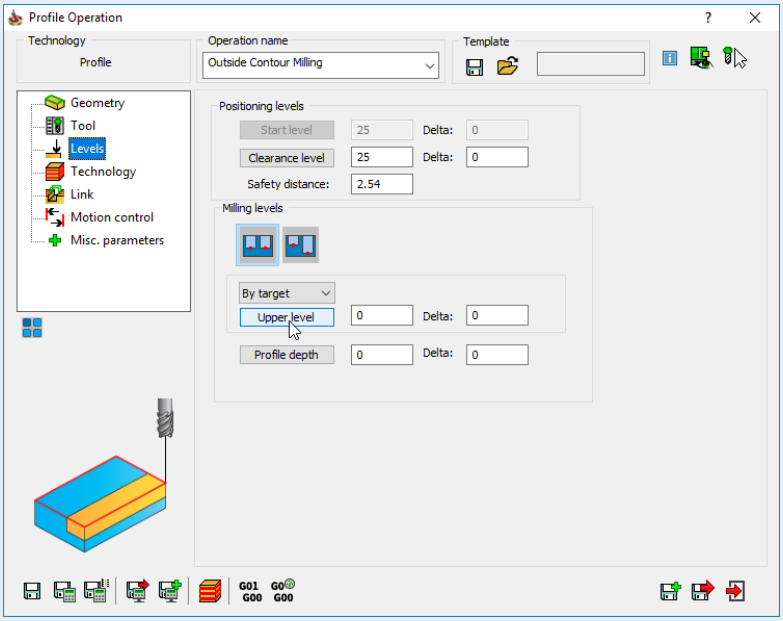

- Pick the top face directly on the solid model as shown.

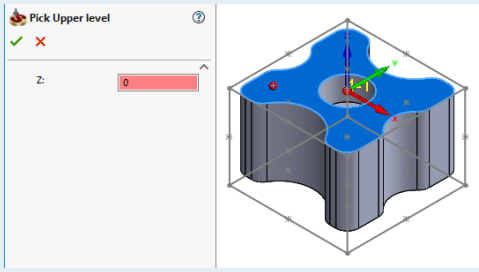

In this exercise, the Upper level is 0 since the Coordinate System was defined on the top surface of the part.

- Confirm the Upper level definition by clicking *OK*.

- Click the *Profile depth* button and then pick on the bottom face of the solid model as shown.

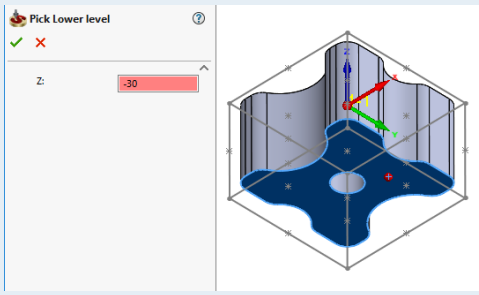

The Profile depth value (-30) is displayed in the Pick Lower level dialog box.

- Confirm the Profile depth definition by clicking *OK*.

The Profile depth is automatically calculated by the difference of the Upper level and Lower level values.

Notes

Notes

This value (30) is displayed in the Profile depth field of the Operation dialog box.

The Lower level parameter is associative to the SolidWorks model. Associativity enables SolidCAM to be synchronized with later model changes. SolidCAM automatically updates the CAM data when the model is modified.

The Profile depth parameter is indirectly associative. The associativity is established in the Lower level. When either the Upper level or Lower level is synchronized, the Profile depth is then updated.

The red field indicates that the parameter is associative to the picked model entity.

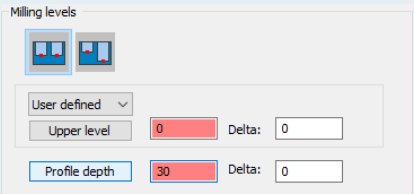

Delta Depth Definition

In SolidCAM, the Delta parameter enables you to define an offset for the cutting depth that can be changed while maintaining associativity.

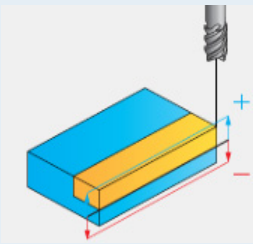

This parameter is relative to the Profile depth defined for the operation.

Suppose you have a Profile depth of 12 mm (0.48 in) and you want a 0.5 mm (0.02 in) allowance in the Z+ direction. If you enter 0.5 (0.02) in the Delta field, the machining will be performed 0.5 mm (0.02 in) above the defined Profile depth, even when the model is later changed.

A negative value is often times used, for example, to perform machining deeper than the part bottom edge.

- Enter a Delta depth value of -0.5 mm (-0.02 in).

If the Delta depth value is negative, a red arrow is displayed next to the field indicating a negative offset value (in the negative direction of the Z-Axis).

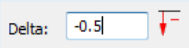

If the Delta depth value is positive, a blue arrow is displayed next to the field indicating a positive offset value (in the positive direction of the Z-Axis).

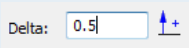

1.7.3 Defining the Technology

- Switch to the *Technology* page to define the technological parameters of the Profile milling.
- In the Modify area, define the tool position relative to the geometry.

Left
The tool cuts on the left side of the profile geometry (tool shown with right-hand helix and M03 spindle direction).

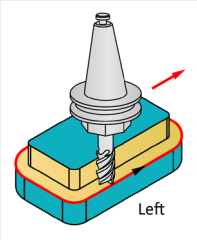

Right
The tool cuts on the right side of the profile geometry (tool shown with right-hand helix and M03 spindle direction).

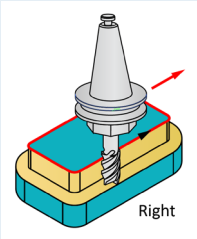

Center
The center of the tool moves exactly on the profile geometry (no compensation options G4x can be used).

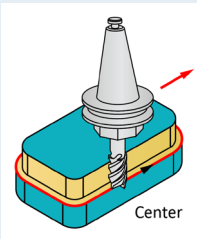

For this exercise, the default option of *Left* meets the requirements to perform climb milling.

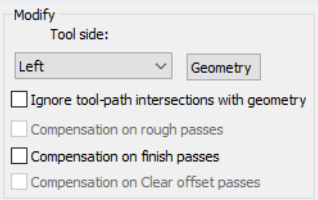

Notes

Notes

- Click the *Geometry* button to check the tool position.

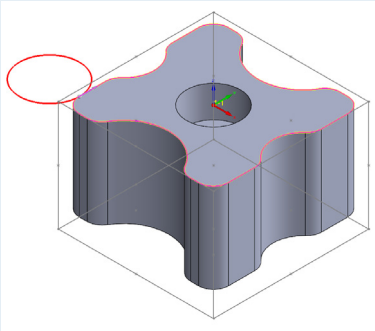

The tool position is correct.

- Click *Cancel* to return to the Profile Operation dialog box.

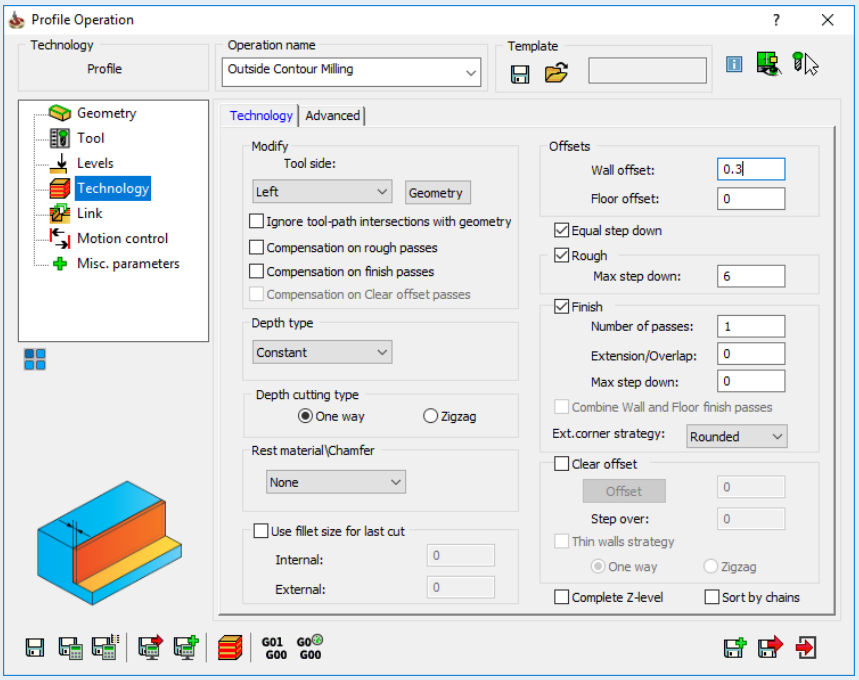

By default, the *Finish* check box is enabled.

In this case, the roughing and finishing can be performed with the same tool in the same operation.

- Enable both the *Equal step down* and *Rough* check boxes and then enter a Max step down of 6 mm (0.24 in) for roughing.

- In the Wall offset field, enter an allowance of 0.3 mm (0.012 in).

- Enable *Compensation* on both the rough and finish passes. The tool radius compensation option *G41* of the CNC-Machine Controller will be used in the GCode.

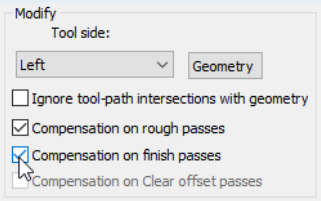

In the Finish area, if the Max step down is set to 0, the finishing will be performed at the full Profile depth.

1.7.4 Defining the Lead in and Lead out Tool Link Movements

The Lead in and Lead out areas of the Link page enable you to control the way the tool approaches the profile and then retreats away.

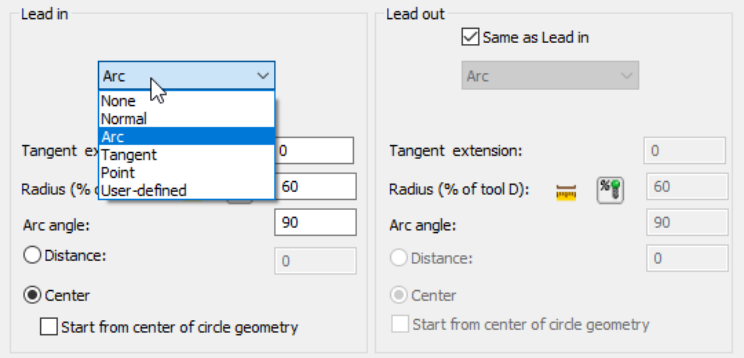

The lead-in movement is necessary to prevent vertical entering of the tool into the material. With the lead-in strategies, the tool descends to the machining level outside the material and then horizontally penetrates the material with the lead-in movement.

The lead-out strategy enables you to perform the retract movements outside the material.

The following options are available:

None
The tool leads in to and out of the cut from the milling level exactly adjacent to the start point of the profile.

Notes

Notes

Normal
The tool leads in/out from a point normal to the profile. The distance between the point normal and the material is specified in the Tangent extension field. The Normal length can be specified in the accompanying field.

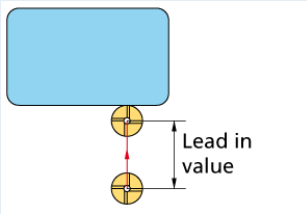

Arc
The tool leads in/out via a tangential arc. The length of the extension is specified in the Tangent extension field. The arc radius is specified in the Radius field. The Arc angle can be specified in the accompanying field.

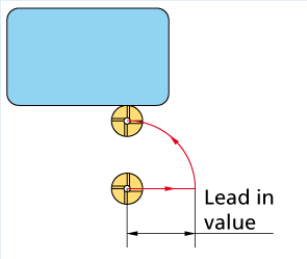

Tangent
The tool leads in/out via a line tangent to the profile. The distance to the material is specified in the Tangent extension field. The Length is specified in the accompanying field.

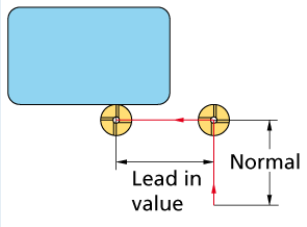

Point
The tool leads in/out from a user-defined position. From this position, the tool moves on a straight line to the start point of the profile. When chosen, the Pick button is activated so that you can select a position directly on the solid model. The distance between the point and the material is specified in the Tangent extension field.

- Choose the option *Tangent* and specify a Length (value) of 15 mm (0.6 in).

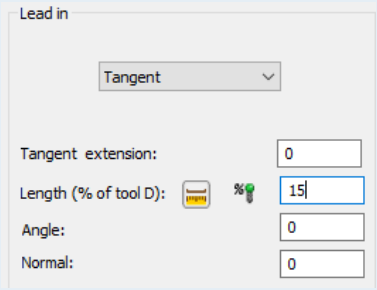

If the *Same as Lead in* check box is enabled in the Lead out area, the same strategy and parameters defined for Lead in are used for Lead out. Often times, this option can help to simplify the selection process.

- For Lead out, choose the option *Arc* and specify a Radius (value) of 2 mm (0.08 in) with a 90° Arc angle.

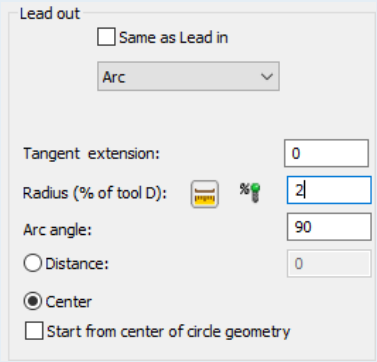

- For the Links between... passes through parameter, *Safety distance from upper level* should be selected in order to prevent unnecessary tool movements to the Clearance level.

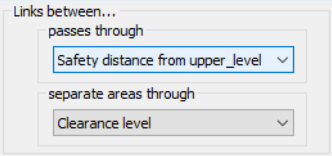

The definition of the basic technological parameters for Profile milling is finished.

1.7.5 Calculating and Simulating the Tool Path

- Click the *Save & Calculate* button.

The Profile operation data is saved and the tool path is calculated

- Click the *Simulate* button and then perform the operation simulation using the SolidVerify mode.

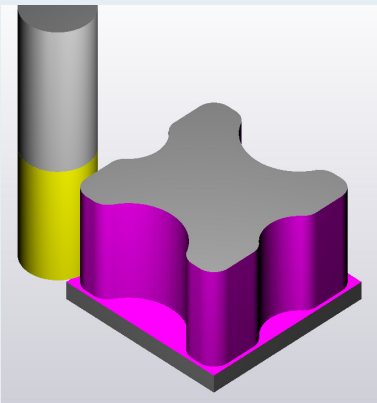

- Now switch to the *Host CAD* mode and click the *Play* button.

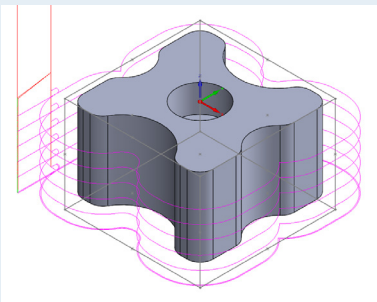

The Host CAD simulation mode enables you to display the tool path directly on the model in the SolidWorks window. Since all the View Orientation options of SolidWorks are active during the simulation, you can see the tool path from different perspectives and zoom on certain areas of the model.

The *Show tool 2D* option toggles on/off a simplified graphic representation of the tool.

The *Show tool 3D* option, on the other hand, toggles on/off a 3D graphic representation of the tool.

- Close the Simulation control panel with the *Exit* button.

Notes

Notes

1.8 Centering the Through Hole

A Drilling operation should be defined next to perform the preliminary center drilling of the through hole.

- In the CommandManager, switch to the *SolidCAM 2.5D* toolbar and choose *Drilling*.

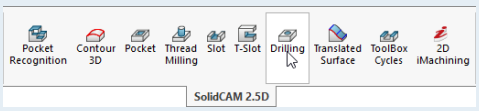

The SolidCAM toolbars provide an alternate method of adding operations.

- In the Operation name field, enter *Through Hole Centering*.

- On the Geometry page, click the *New* button and then pick on the top face of the solid model.

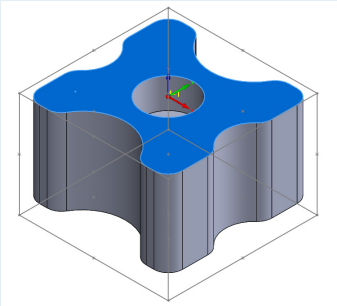

SolidCAM automatically recognizes the hole center.

By default, *Multi-positions* is chosen in the Select centers by area and *All circles* is chosen in the Filter for circle/arc selection area.

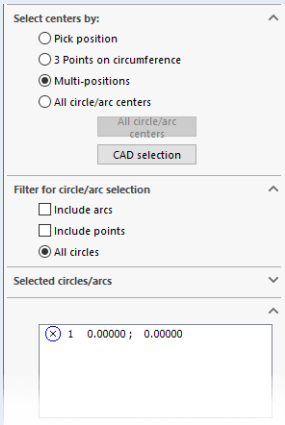

SolidCAM automatically recognizes all hole center points on the selected face and defines them as drill positions.

- Click *OK* to confirm the Drill Geometry Selection dialog box.

1.8.1 Defining the Tool and Tool Data

- Switch to the *Tool* page and then click the *Select* button to start the Tool definition.

Notes

- Click the *Add Milling Tool* button and then choose *SPOT DRILL* from the Drilling Tools list.

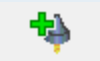

- Set the Diameter to 10 mm (0.3937 in) and then click *Select* to choose the tool for the operation.

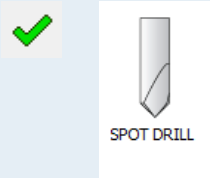

- Switch to the *Data* tab and then define the cutting data of the tool as shown below.

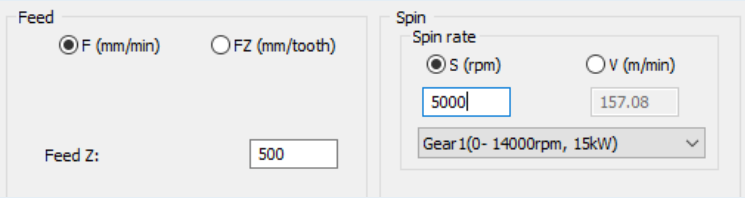

1.8.2 Defining the Drilling Depth

- Switch to the *Levels* page of the Drilling Operation dialog box.
- Click the *Upper level* button and then pick on the top face of the solid model.
- Click the *Drill depth* button and then again pick on the top face of the solid model.

A Drill depth value of 0 appears in the accompanying field.

The Depth type option can be used to deepen the drilled hole in order to obtain a given diameter at the specified drilling depth.

- Choose *Diameter value* for the Depth type and enter a value of 4 mm (0.16 in).
- Click *Save & Calculate*.

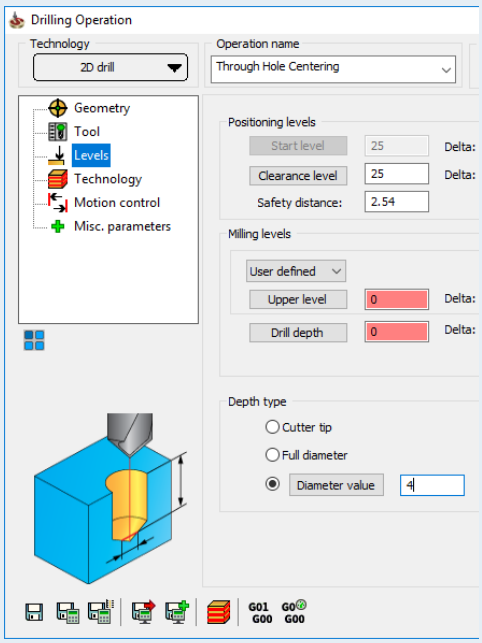

Notes

- Simulate the operation in the SolidVerify mode.

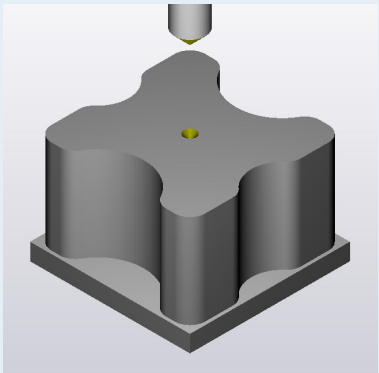

- Close the Simulation control panel with the *Exit* button.

1.9 Drilling the Through Hole

- Click the *Save & Copy* button at the bottom right of the Drilling Operation dialog box.

This button saves the current operation data and automatically creates a new operation with the same parameters. The new operation is automatically opened for editing. Using the Save & Copy functionality, you can quickly create a new similar operation where most parameters are identical.

- In the Operation name field, enter *Through Hole Drilling*.

- For this operation, define a drill with a diameter of 11 mm (0.4375 in).

- Define the cutting data of the tool as shown below.

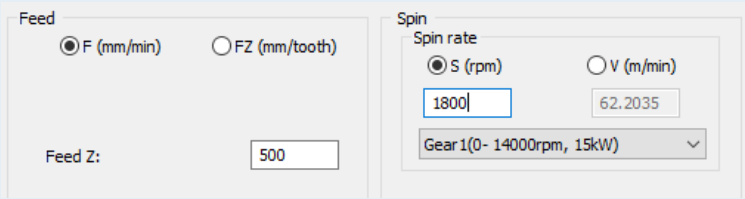

- Switch to the *Levels* page to define a new drilling depth and the method used to achieve the depth.

Notes

- Click the *Drill depth* button and then pick on the bottom corner of the 3D sketch to define the drilling depth.

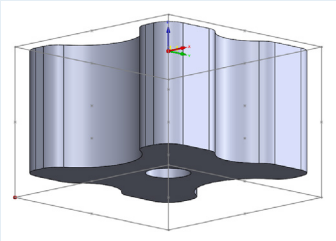

The Drill depth value is now 36 mm (1.44 in). Since this depth is sufficient, a Delta depth is not required.

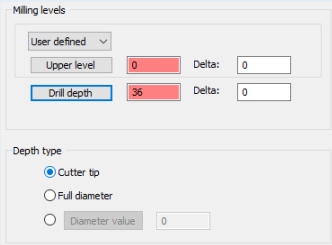

- Change the Depth type option to *Cutter tip*.

1.9.1 Using Drill Cycles

- Switch to the *Technology* page.

SolidCAM enables you to use a number of drill canned cycles supported by your CNC-Machine Controller (e.g., Drilling or Boring).

- Click the *Drill cycle type* button and select *Peck203* from the list (for Heidenhain Controller).

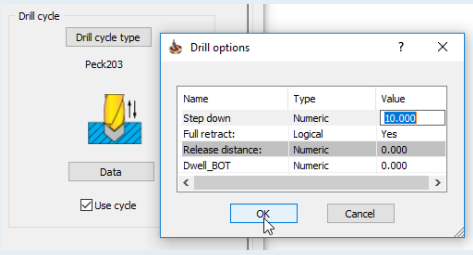

- Click the *Data* button and enter a Step down value of 10 mm (0.4 in).
- Click *OK*.
- Click *Save & Calculate* and then, when prompted by the appearing message, click *Yes*.

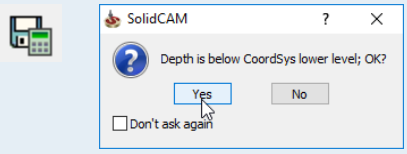

- Simulate the operation in the SolidVerify mode.

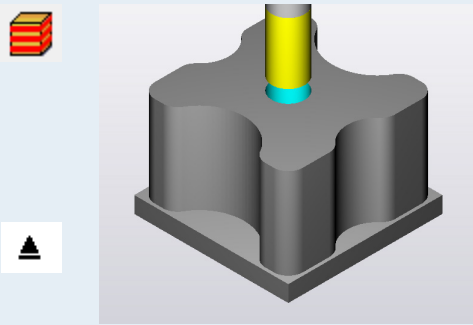

- Exit the Simulation control panel and the Drilling Operation dialog box.

Notes

1.10 Milling the Counterbore

- To perform the machining of the counterbore, add a Pocket operation and name it *Counterbore Milling*.

- On the Geometry page, click the *New* button and then pick on the counterbore contour.

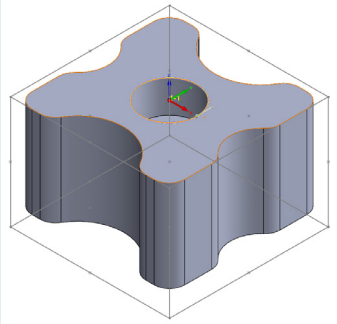

Since the contour is a closed circle, the confirmation message OK to accept? is automatically displayed.

- Click *Yes* to accept the selection.

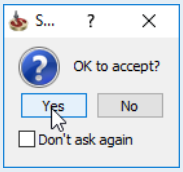

- In the Name area of the Geometry Edit dialog box, enter *Counterbore Contour*.

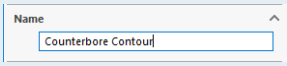

- Confirm the Geometry definition by clicking *OK*.

- For this operation, define a new end mill with a diameter of 10 mm (0.3906 in).

- Specify the necessary cutting data of the tool as defined in Chapter 1.7.1 (when the Ø20 mm (0.75 in) end mill was created).

- Switch to the *Levels* page and then define the Upper level and Pocket depth directly on the solid model.

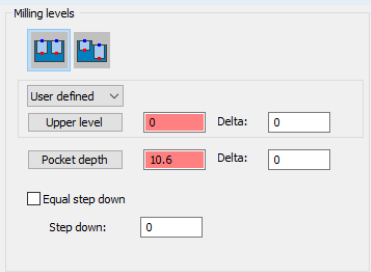

- Switch to the *Technology* page and in the Wall offset field, enter an allowance of 0.2 mm (0.008 in).

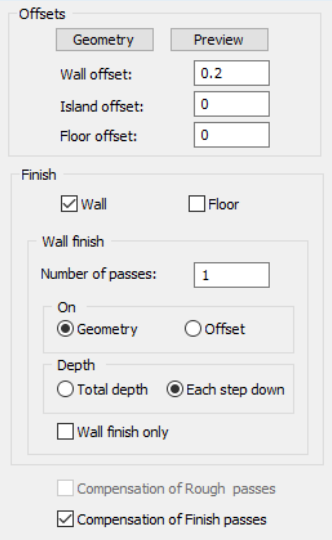

In this case, the roughing and finishing can be performed with the same tool.

- In the Finish area, enable the *Wall* check box.

- Enable Compensation to use the options *G4x* in the GCode.

- Switch to the *Link* page and then define the parameters of the tool approach and retreat as shown.

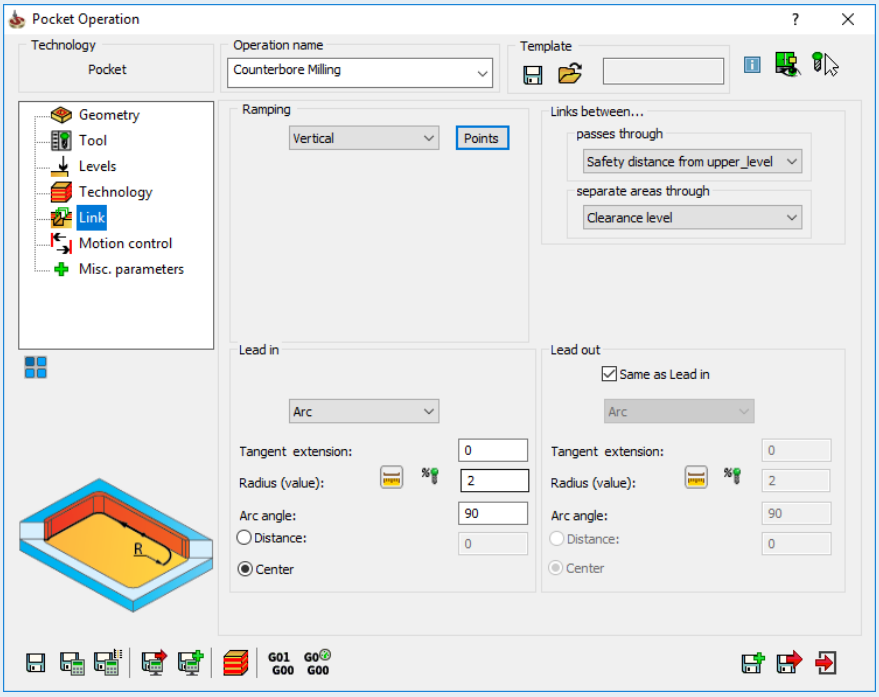

Since the workpiece is already drilled at this point, the option *Vertical* can be used to perform the Ramping.

- Click the *Points* button and in the Pre-Drill Operations area, select the previous operation *Through Hole Drilling* to define the position of the plunge point.

- Click *OK* to confirm the Ramping points dialog box.

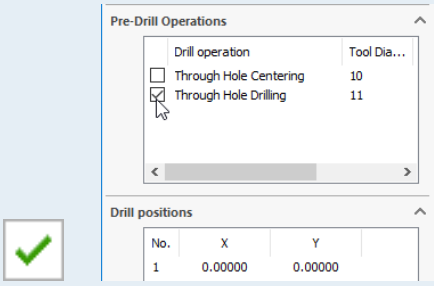

Notes

Notes

- Click *Save & Calculate*.

- Simulate the operation in the SolidVerify mode.

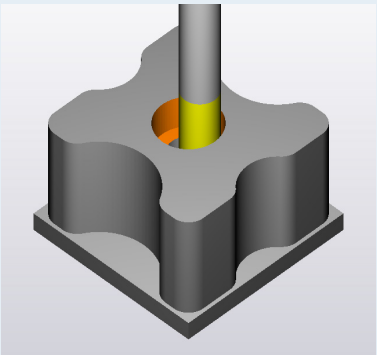

- Exit the Simulation control panel and the Pocket Operation dialog box.

1.11 Adding a New Coordinate System

The bottom face of the workpiece must now be machined. Since this will require a separate clamping, you have to define another Machine Coordinate System for the next operation.

- In the SolidCAM Manager, double-click the *CoordSys Manager* subheader to display the corresponding dialog box.

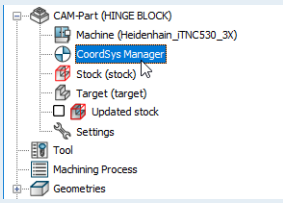

- With the RM button, click *MAC 1* and then choose *Add...*

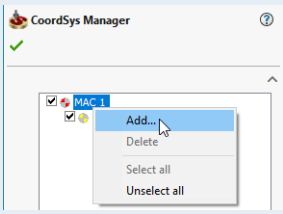

- In the CoordSys dialog box, change the Mac CoordSys number to *2* (e.g., MAC 2 - G55).

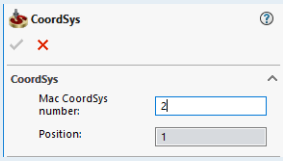

- To center the Coordinate System origin, pick on the cylindrical surface of the through hole as shown.

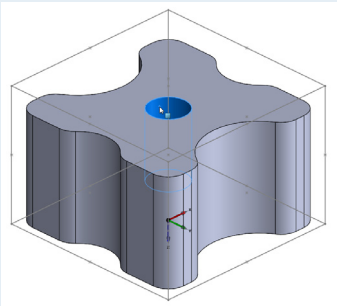

The origin is placed in the center of the part but with the Z-Axis facing the wrong direction.

- Click the *Change to opposite* button to quickly invert the origin to the correct position.

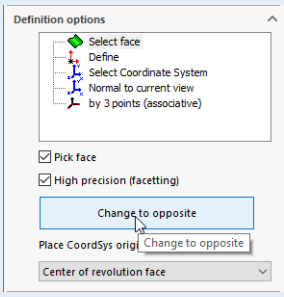

- To confirm the new Coordinate System definition, click *OK*.
- Click *OK* again to accept the default machining levels and to close the CoordSys Data dialog box.

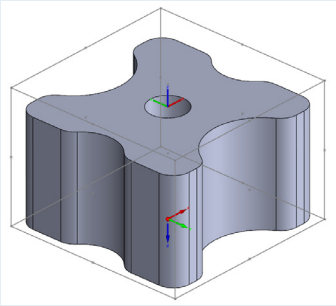

- Rename the origin position *2nd Setup*.
- Click *OK* to confirm the Machine Coordinate System and to close the CoordSys Manager dialog box.

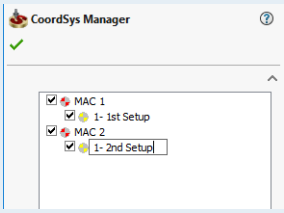

1.12 Adding a Face Milling Operation (2nd Setup)

Add another Face Milling operation, this time to perform the machining of the workpiece finished height (30 mm (1.2 in)).

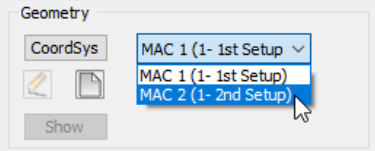

- Define the operation by following a procedure similar to that performed in Chapter 1.6 with two differences:
  1. On the Geometry page, *MAC 2 (1- 2nd Setup)* is specified for use by the operation.
  2. The Base Geometry selection *target* is used to define the Face Milling Geometry.

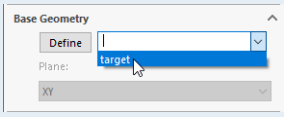

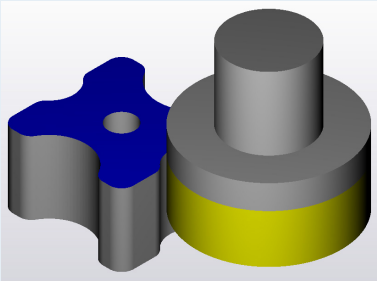

- Simulate the operation in the SolidVerify mode.

Notes

Notes

1.13 Generating GCode

Step 7:
Generate the GCode.

Since the manufacturing of this component is performed in two setups with separate clamping, a separate GCode file should be generated for each setup.
To easily do this, SolidCAM enables you to insert a Split in the program.

- RM click the last operation under MAC 1 (1- 1st Setup) in the CAM tree and choose *After* from the *Split* submenu.

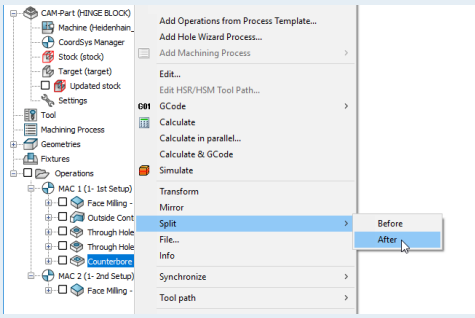

- Enter a name for the Split, for example, *2nd Setup* and then click *OK*.

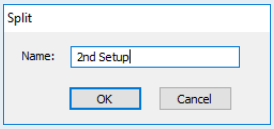

If several Coordinate Systems are defined, it would be beneficial to insert a Split in the program before each one.

- To generate the GCode for all operations at once, RM click the *Operations* header and choose the *Generate* command from the *GCode All* submenu.

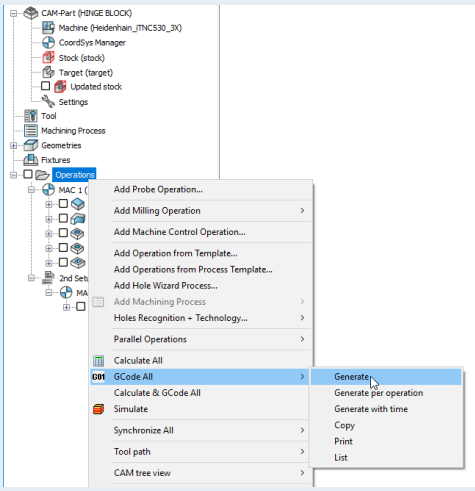

Depending on the post-processor, the GCode is output for both setups as two separate Notepad files.
By default, the generated GCode files will be stored in the CAM-Part folder.
You can print the generated GCode via the text editor (such as Notepad) specified in the SolidCAM Settings.

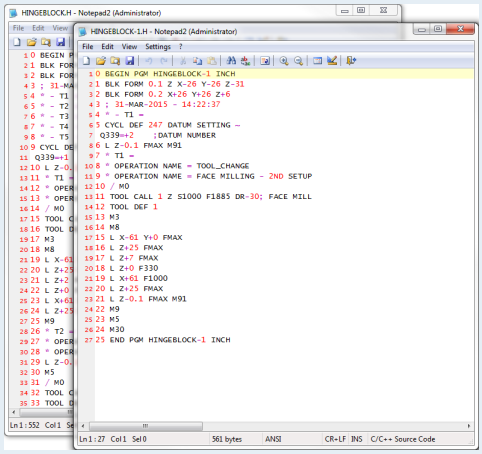

You can also generate GCode for a single operation or for a specific group of operations.

The CAM program for the workpiece *Hinge Block* is completed.

Step 8:
Send the GCode to the machine.

- The GCode files can be transferred to your machine via a flash drive (USB stick) or a network connection.

1.14 Documentation

Finally, you should create the necessary documentation.

- In the SolidCAM Manager, RM click the CAM-Part header and choose *Tool Sheet* from the *Documentation (ToolSheet)* submenu.

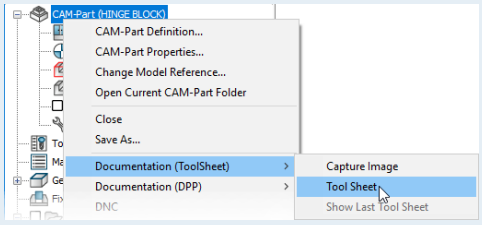

The Tool Sheet Extra Parameters dialog box is displayed.

- Click *Generate*.

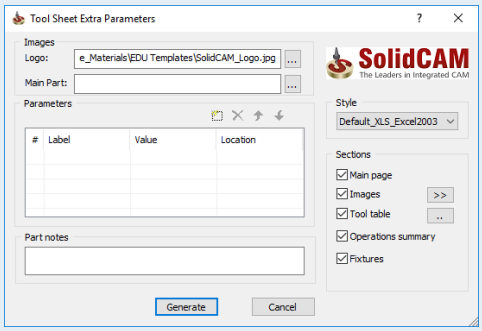

The Tool Sheet is created and contains a summary of CAM-Part information, the tools used in the CAM Project and the sequence of machining operations.

For each Tool Sheet Project, SolidCAM creates the Doc folder in the CAM-Part directory for saving the file.

Notes

Notes

Manufacturing Task: Foot

- Now create the CAM program in SolidCAM for the component *Foot*. When the part programming is completed, generate the GCode.

The steps necessary to perform this task were learned and applied in the just completed example.

Prior to programming in SolidCAM, it would be beneficial to first create a plan for the production process.

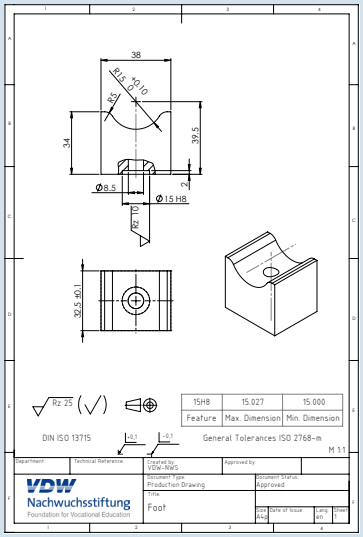

- Plan the operational steps and then document them in the provided Job Process Sheet.

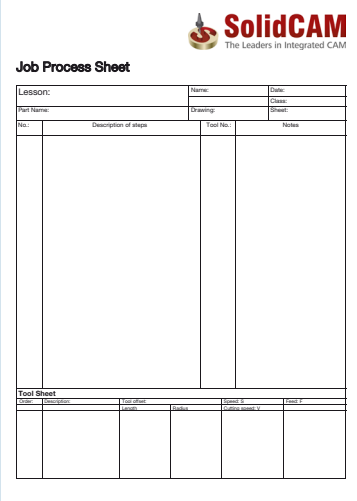

An enlarged view of the production drawing can be found in the Appendix as well as the Course_Materials folder.

Course_Materials
EDU Templates
Part file: Foot
Drawings > PDFs

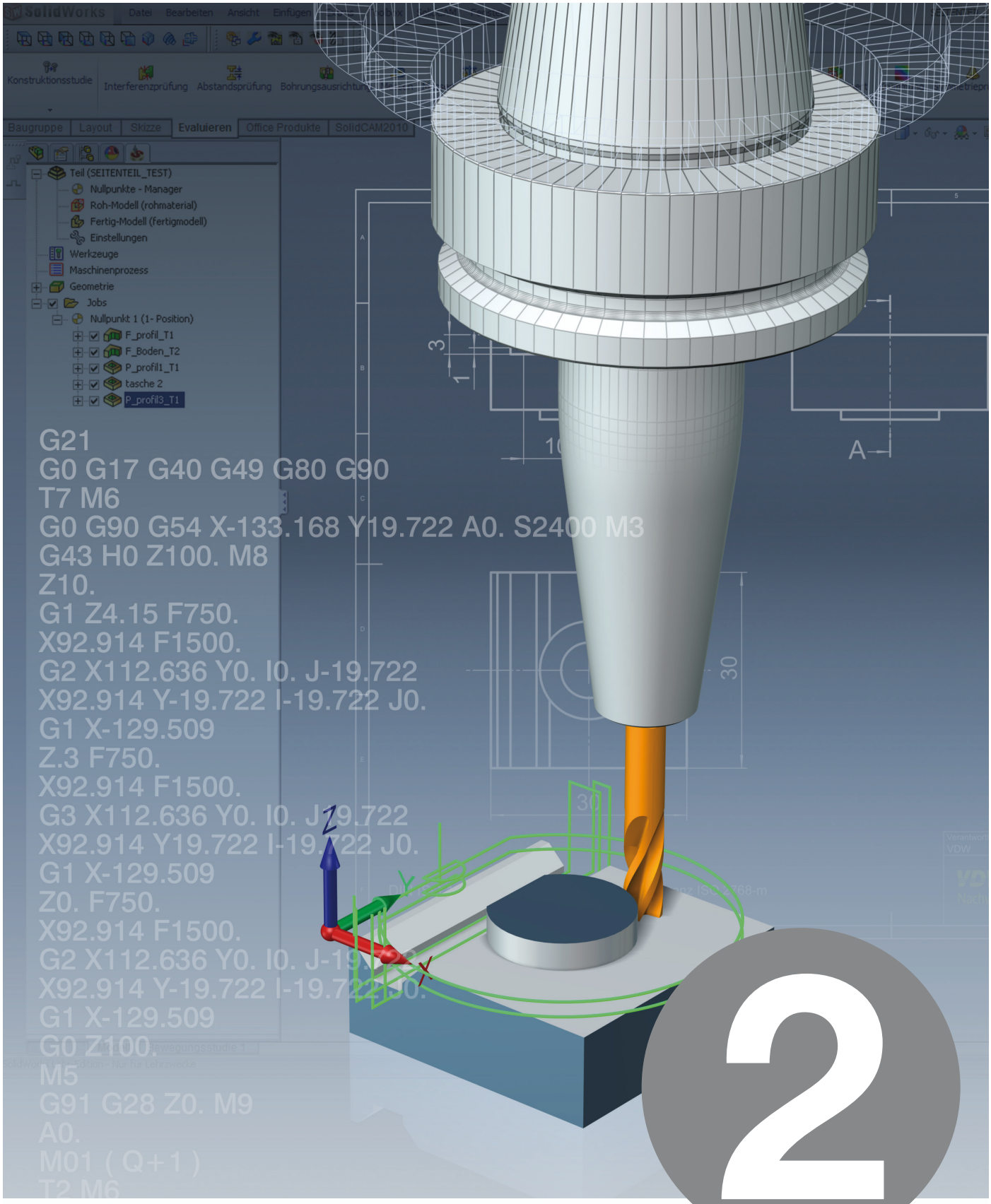

Lesson

Manufacturing the Pin Holder

Lesson 2:

Manufacturing the Pin Holder

Notes

As per the drawings on the next page, create the CAM programs for the components *Pin Holder Base* and *Pin Holder Top* and then generate the GCode files.

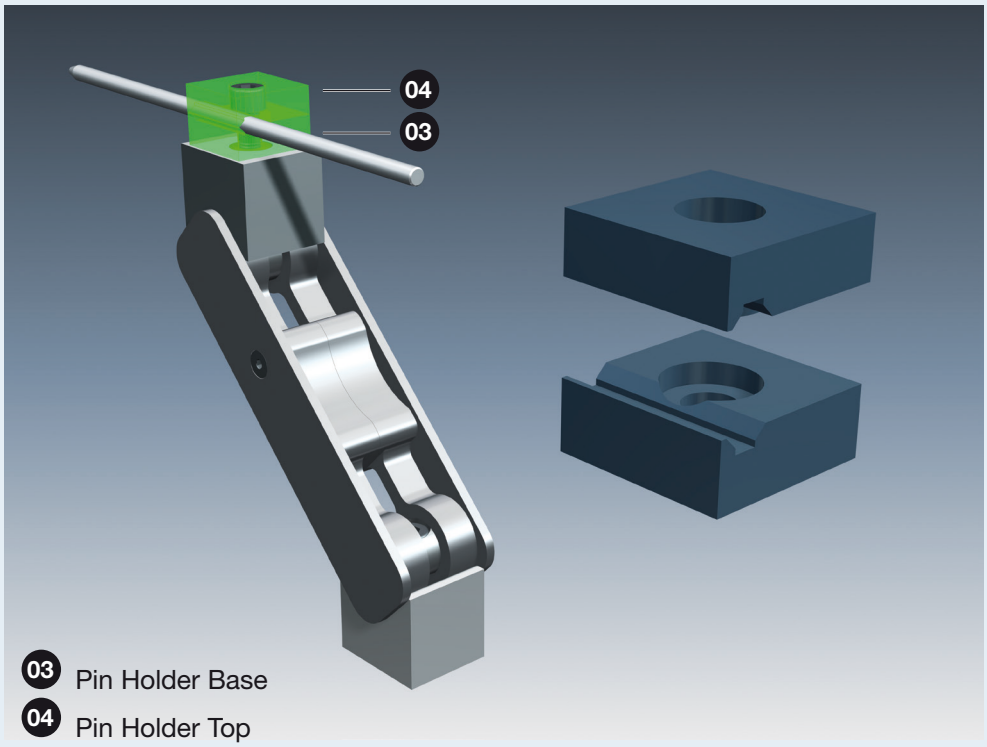

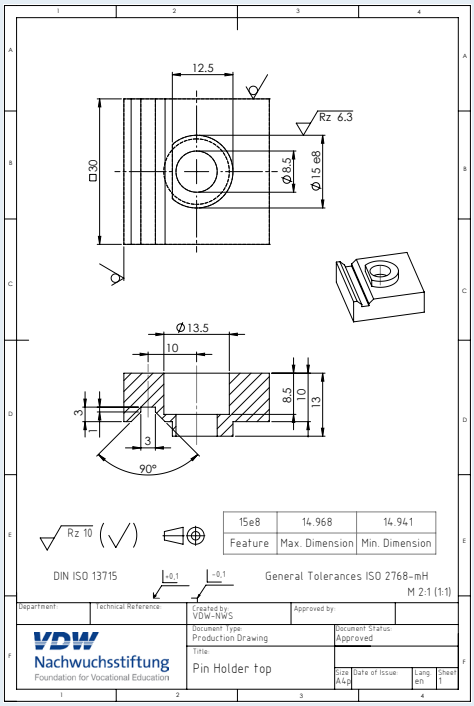

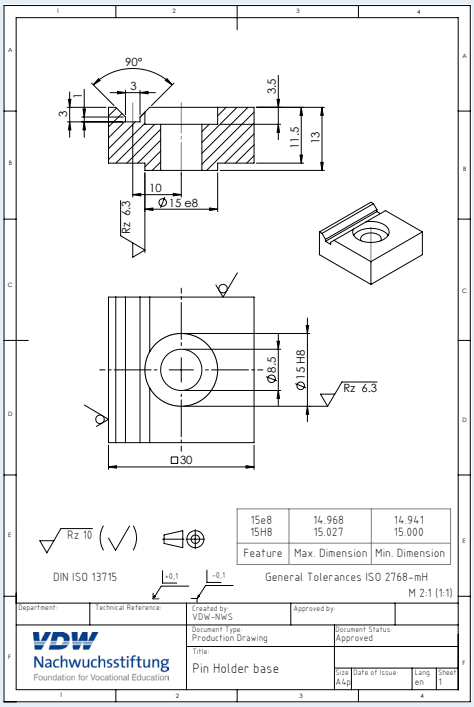

On the following pages, an example part is used to illustrate the steps that are necessary to complete this task.

- The manufacturing task for the components *Pin Holder Base* and *Pin Holder Top* can be effectively performed by first completing the example.
- This lesson should be approached by using the same eight steps outlined in Lesson 1.

Notes

Chapter 2

Defining and Using Fixtures

Notes

Course_Materials
Part file: Prism
Drawings > PDFs

Example Part: Prism

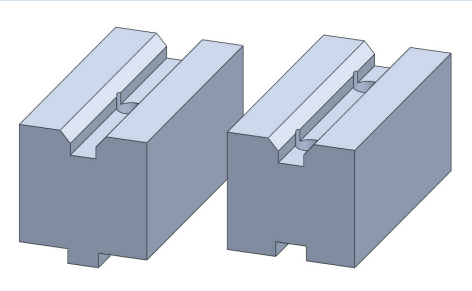

All the steps and information needed to complete the manufacturing task are provided in this example.

The following two Prism variations were created using configurations in SolidWorks: *Prism with Keyway* and *Prism with Fitting Key*.

- Work through the example.

Using SolidCAM, create the CAM programs for the manufacturing of the example parts *Prism*.

Document the results of your work.

2.1 Creating and Defining the CAM-Part

- Open in SolidWorks the example part *Prism.SLDPRT*.

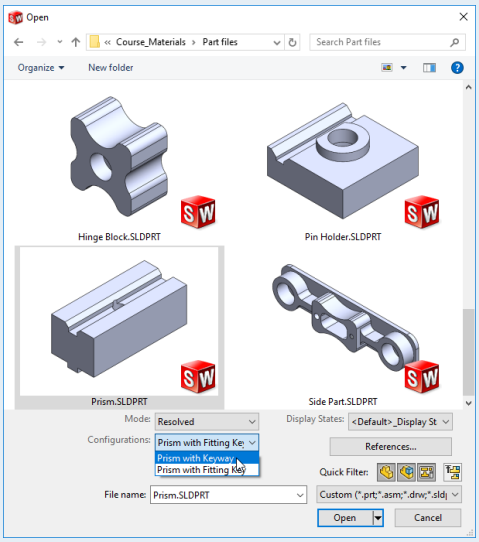

- For the first configuration *Prism with Keyway*, create a New Milling CAM-Part in SolidCAM.

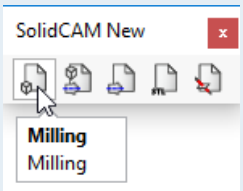

- Determine the location for storing the CAM data and confirm the CAM-Part creation.

- Select the post-processor (*Heidenhain_iTNC530_3X*).

2.1.1 Defining the Machine Coordinate System

For this exercise, the four lateral sides of the workpiece are ready and will not require machining.

- Since the workpiece will require separate clamping to machine both the top and bottom surfaces, define two Machine Coordinate Systems.

- After clicking *CoordSys* to start the Coordinate System definition, use the *Select Face* option and in the Place CoordSys origin to drop-down menu, select *Top corner of model box* from the list.

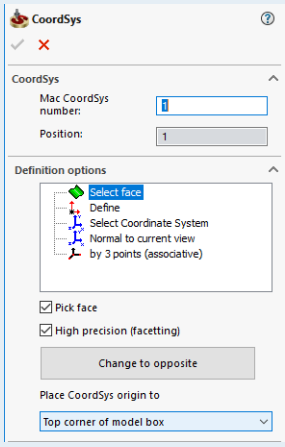

- Pick on the top surface as shown.

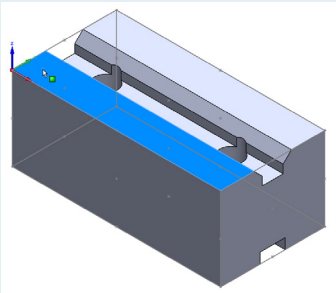

SolidCAM generates a box surrounding the solid body and the Coordinate System origin is placed in the corner of the model box. The Z-Axis is made perpendicular to the picked surface.

- To confirm the Coordinate System definition, click *OK*.

- After accepting the Default machining levels in the CoordSys Data dialog box, add another Machine Coordinate System for the 2nd Setup as shown.

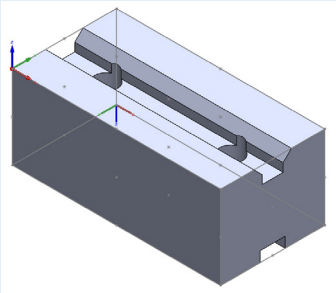

- Rename both origin positions and then click *OK* to exit the CoordSys Manager dialog box.

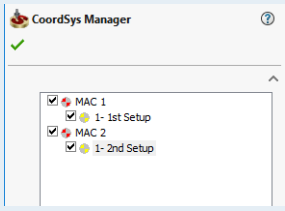

Notes

Notes

2.1.2 Defining the Stock and Target Models

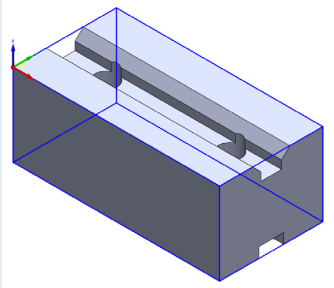

- Define the Stock model. Since the outside shape does not require machining, no offsets need to be specified.
- Define the Target model and then confirm the CAM-Part Definition.

2.2 Inserting and Defining a Fixture

SolidCAM enables you to define the part fixtures such as clamps, vises, jig plates, etc. This Setup feature provides a more realistic representation of the included setup data during simulation. Possible collisions between the tool and workholding can be detected and fixed at an early stage. First, you must insert the solid model of the fixture into the CAM assembly.

T!P It is recommended that you copy the SolidWorks part fixture file into the CAM-Part folder prior to inserting it into the CAM assembly.

2.2.1 Inserting the Fixture

- In the SolidWorks Menu Bar, click *Insert* > *Component* > *Existing Part/Assembly...*

The Insert Component dialog box is displayed.

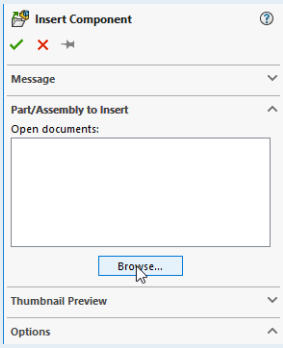

- If browsing is not set to start automatically, click the *Browse* button and then select the file *Fixture.SLDASM*.

Course_Materials
Part files: Fixture and Workpiece Stop

- Insert the assembly *Fixture* into the CAM assembly.

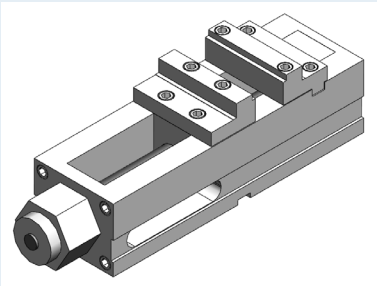

- Follow the same procedure to insert the file *Workpiece Stop.SLDASM*.

The assembly *Workpiece Stop* is now inserted into the CAM assembly.

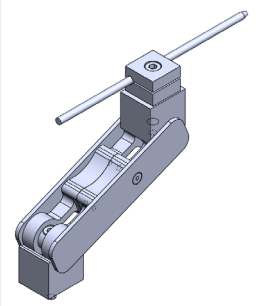

At this point, both subassemblies can be freely moved about the SolidWorks Graphics Area. However, the inserted subassemblies act as single units and their components do not move relative to each other. When inserted into a parent assembly (i.e., CAM assembly), a subassembly is made rigid by default.

- Add the appropriate linking to align the bottom surfaces of the Fixture and the Workpiece Stop component *Foot*.

Before the Fixture and the workpiece *Prism with Keyway* can be linked, the subassembly *Fixture* must be made flexible. This will allow movement of the individual components within the parent assembly.

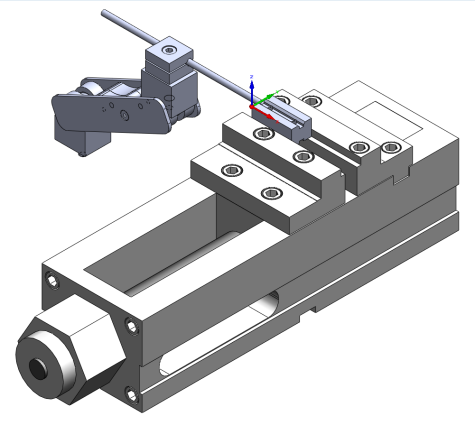

- In the FeatureManager Design Tree, click the subassembly *Fixture* and choose *Component Properties...* from the appearing context toolbar.

- In the Solve as area, select *Flexible* and then click *OK*.

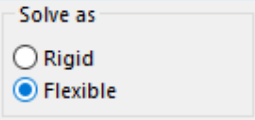

- Now add the remaining mates.

Notes

Notes

2.2.2 Defining the Fixture

- In the SolidCAM Manager, RM click the *Operations* header and from the appearing shortcut menu, choose *Machine Setup... > Add at start of operations tree*.

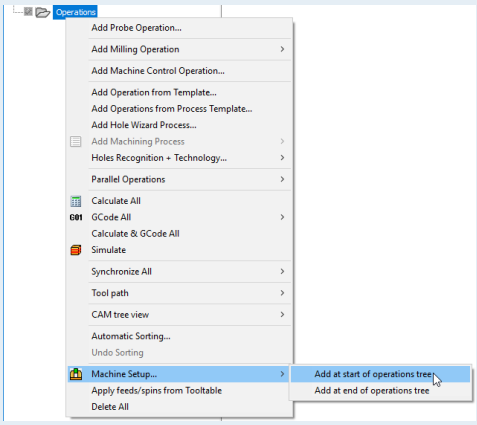

The Machine setup dialog box is displayed. The Fixture column enables you to define the part fixtures to be used in the CAM Project.

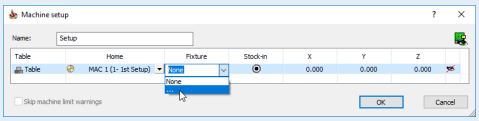

- Double-click the *None* field and choose *...* from the drop-down list.

The Model dialog box is displayed, which enables you to define the part fixture geometry.

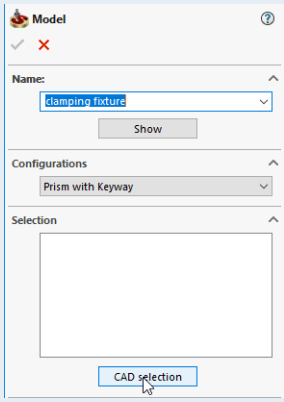

- Click the *CAD selection* button in the Selection area.

- Using the flyout FeatureManager Design Tree, select both the *Fixture* and the *Workpiece Stop* while holding down the *Ctrl* key.

- Click *Resume*.

The two subassemblies are highlighted and the individual components appear in the Selection area. If any of the components were not accepted, they can now be selected one at a time in the SolidWorks Graphics Area. The selected components will be added to the list.

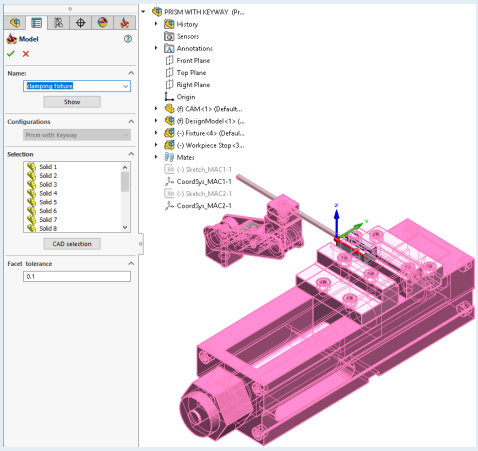

- Click *OK* to confirm the Fixture definition and close the Model dialog box.

- In the Name field of the Machine setup dialog box, enter *1st Setup*.
- Click *OK* to confirm the Machine Setup definition and close the Machine setup dialog box.

The clamping device now appears in the SolidCAM Manager tree.

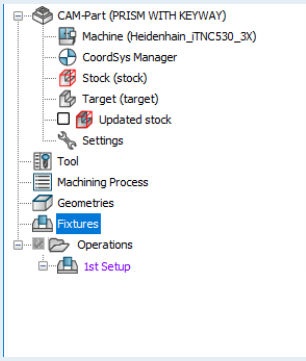

2.3 Slotting with a Profile Operation

- Add a Profile operation to perform the machining of the slot.
- Define the machining geometry.
- Since the slot is interrupted by the holes, proceed in the following order:
  1. Choose the *Point to point* option in the Chain area of the Geometry Edit dialog box.
  2. Pick on the point at the start of the slot.
  3. Pick on the point at the end of the slot.
  4. Click *Accept chain* in the Chain List area to accept the chain.

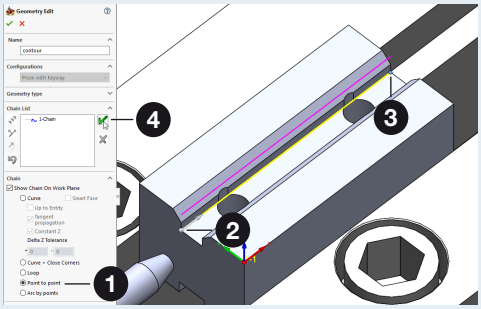

- For this operation, define a Ø5 mm (0.1875 in) end mill.

Since the slot is the same width as the tool and has no specified tolerance, a Ø5 mm (0.1875 in) end mill can be used in this instance.

- Switch to the *Levels* page and then define the Upper level directly on the solid model.

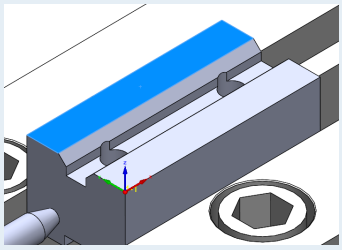

Notes

Notes

- Define the Profile depth directly on the solid model.

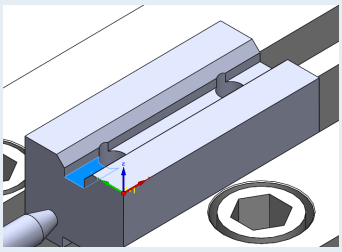

- On the Technology page, define the technological parameters as shown below.

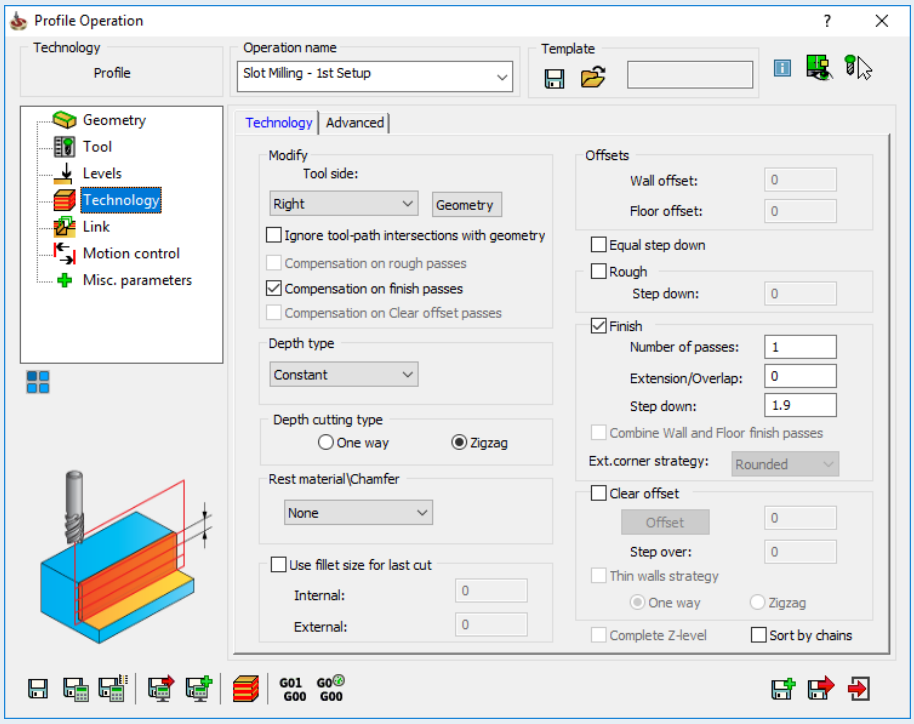

For this exercise, the tool position relative to the profile geometry should be set on *Right* with the option *Zigzag* for the Depth cutting type.

- For Finish, enter a Step down value of 1.9 mm (0.076 in) so that 0.2 mm (0.08 in) of remaining material is removed with the final finishing pass.

- Define a *Tangent* lead in/out with a Length (value) of 3 mm (0.12 in).

You could also define the machining of this slot using a Slot operation.

- Click *Save & Calculate*.

- Simulate the operation.

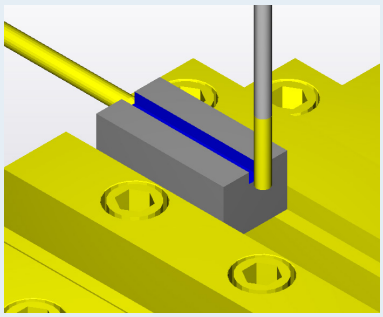

2.4 Milling the Chamfer

- Add a Profile operation to perform the machining of the chamfers.
- Define the machining geometry as shown. Using the *Point to point* option, you can make the chain selections (2 open chains).

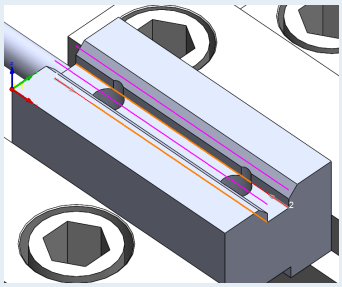

- For this operation, define a Ø6 mm (0.2362 in) spot drill with a 90° drill point angle.

Warning:
When chamfering a contour, either a spot drill, center drill, taper mill or chamfer mill must be used.

On the Levels page, the Chamfer depth is defined using the Profile depth parameter.

- In the Profile depth field, enter a value of 2 mm (0.08 in) or pick it directly on the solid model.

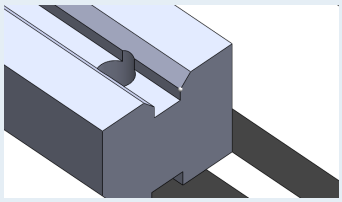

- In the Rest material/Chamfer area of the Technology page, choose *Chamfer* from the drop-down list.

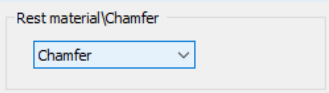

Notes

Notes

On the Technology page, the Chamfer tab is automatically displayed.

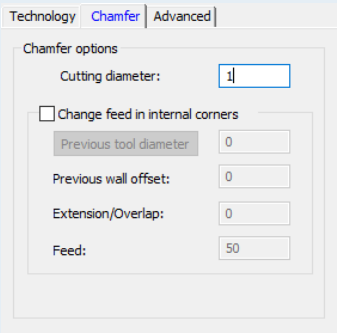

- Define the Cutting diameter (the smallest diameter of the point angle at which the tool will cut along the Chamfer depth).
- Use the default Cutting diameter value of 1 mm (0.04 in).

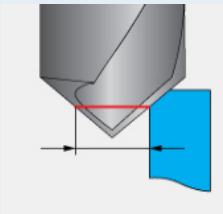

- Switch back to the *Technology* tab and enter a Step down value of 1.8 mm (0.072 in) for Finish so that 0.2 mm (0.08 in) of remaining material is removed with the final finishing pass.
- Define a *Tangent* lead in/out with a Length (value) of 4 mm (0.16 in).
- Click *Save & Calculate*.
- Simulate the operation.

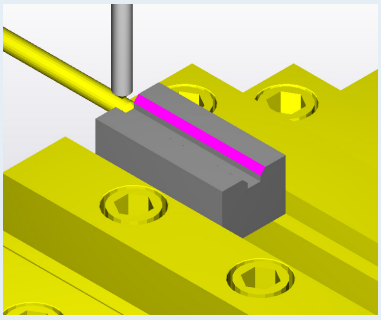

2.5 Drilling the Holes

- Define the Drilling operations to perform the centering and drilling of the two Ø2.9 mm (0.116 in) holes.

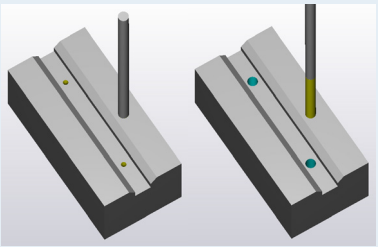

- Using a Ø4 mm (0.1563 in) end mill, define a Pocket operation to perform the machining of the counterbores.
- Use the same end mill for roughing and finishing.
- Leave a Wall offset of 0.1 mm (0.004 in) for finishing.

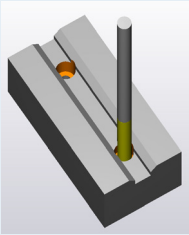

2.6 Inserting and Defining a Fixture for the 2nd Setup

The slot in the bottom of the workpiece must now be machined (2nd Setup).

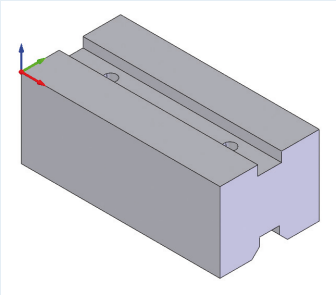

To perform the machining of the slot, the workpiece will require a separate clamping. To see the clamping device in the SolidVerify simulation for the 2nd Setup, the assemblies *Fixture* and *Workpiece Stop* must be inserted again into the CAM assembly.

- In the FeatureManager Design Tree, *Suppress* the subassemblies *Fixture* and *Workpiece Stop* from the 1st Setup.

This will give you a clean view of the SolidWorks Graphics Area when inserting the part fixtures for the 2nd Setup.

During simulation of the operations in the 1st Setup, the suppressed clamping device will be made visible.

- Insert again the Fixture and the Workpiece Stop into the CAM assembly and then add the appropriate linking of components.

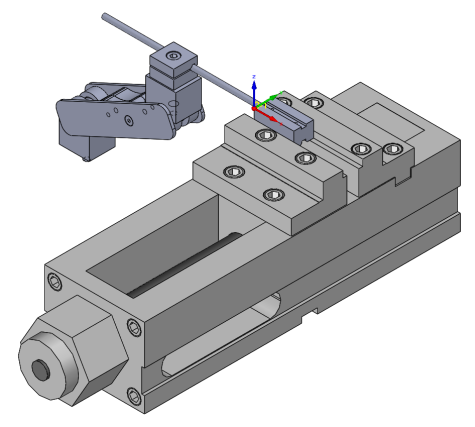

- Define the part fixture geometry by following a procedure similar to that performed for the 1st Setup in Chapter 2.2 with only one difference:
  1. The 2nd Setup is defined using the command *Add at end of operations tree* in the *Machine Setup...* submenu.

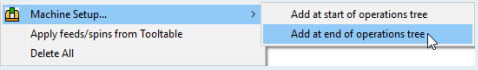

Notes

Notes

The additional clamping device now appears in the SolidCAM Manager at the end of the operations tree.

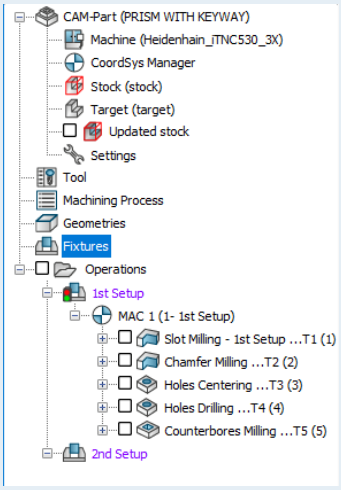

2.7 Milling the Slot (2nd Setup) and Generating GCode

- Add a Profile operation to perform the machining of the slot in the 2nd Setup.

The clamping device must be selected in order to add the operation directly after it.

- On the Geometry page, choose *MAC 2 (1- 2nd Setup)* from the CoordSys drop-down list and then define the machining geometry.

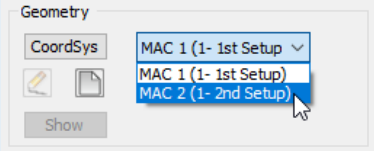

- After the Operation definition is completed, click *Save & Calculate*.

- Simulate the operation.

- Generate the GCode for all operations.

The CAM program for the workpiece *Prism with Keyway* is completed.

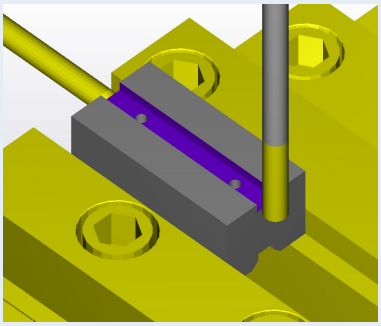

- Now create the CAM program in SolidCAM for the second configuration *Prism with Fitting Key* and generate the GCode.

VDW Nachwuchsstiftung
Foundation for Vocational Education

Manufacturing Task: Pin Holder

- Now create the CAM programs in SolidCAM for the components *Pin Holder Base* and *Pin Holder Top*. When the part programming is completed, generate the GCode.
- Plan and document the operational steps in a Job Process Sheet.

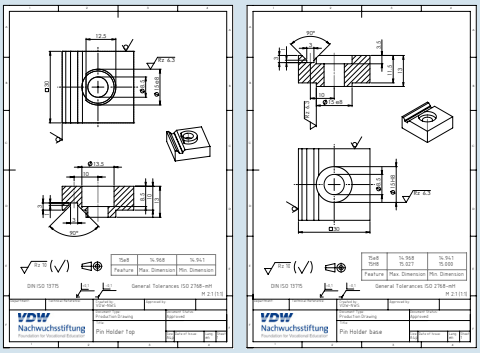

The steps necessary to perform this task were learned and applied in the just completed example.

An enlarged view of the production drawings can be found in the Appendix as well as the Course_Materials folder.

Notes

Course_Materials
Part file: Pin Holder
Drawings > PDFs

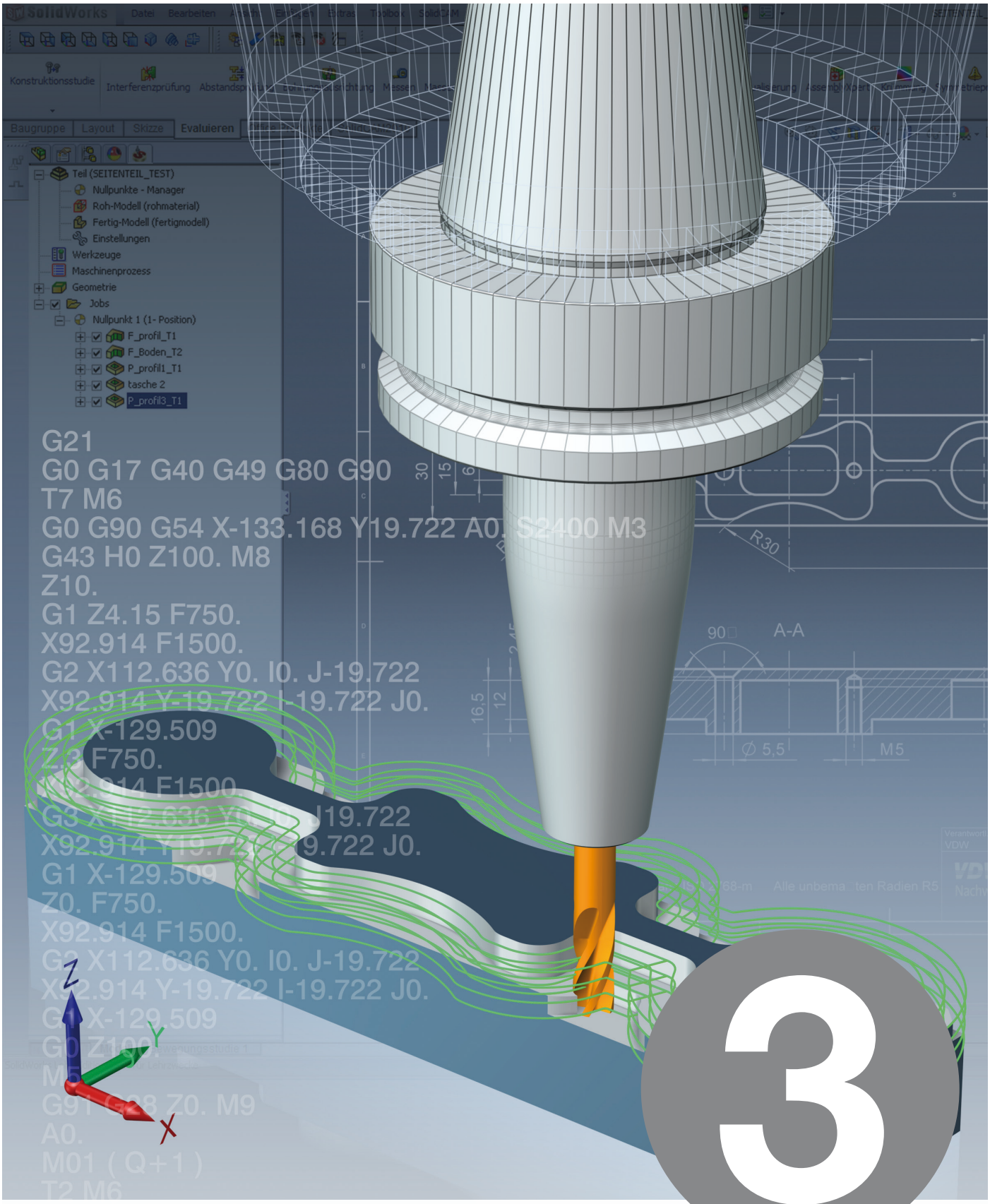

Lesson

Manufacturing the Side Parts

Lesson 3:

Manufacturing the Side Parts

Notes

As per the drawing on the next page, create the CAM program for the component *Side Part* and then generate the GCode file.

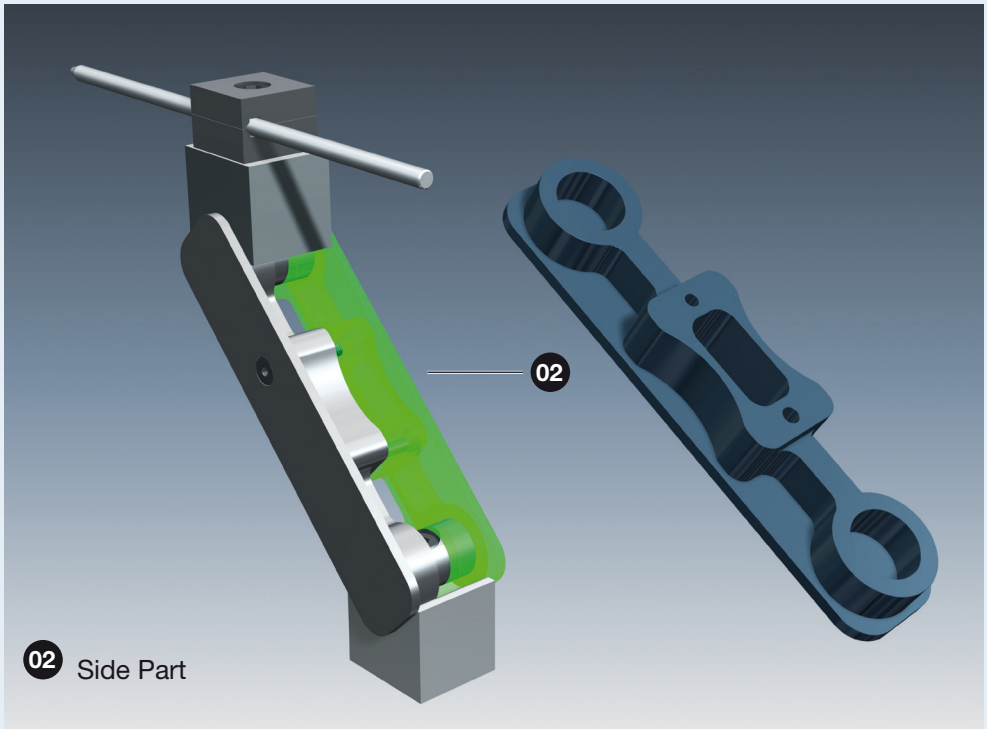

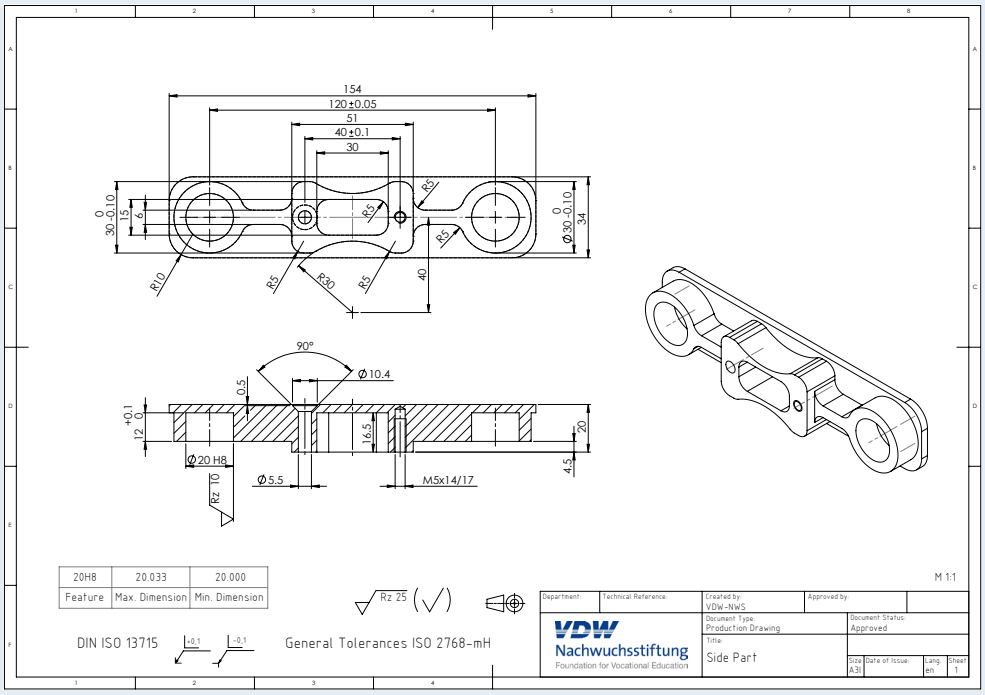

On the following pages, an example part is used to illustrate the steps that are necessary to complete this task.

- The manufacturing task for the component *Side Part* can be effectively performed by first completing the example.
- This lesson should be approached by using the same eight steps outlined in Lesson 1.

Notes

Chapter 3

Machining Outside Contours with Pocket Operations

Notes

Course_Materials
Part file: Counter Plate
Drawings > PDFs

Example Part: Counter Plate

All the steps and information needed to complete the manufacturing task are provided in this example.

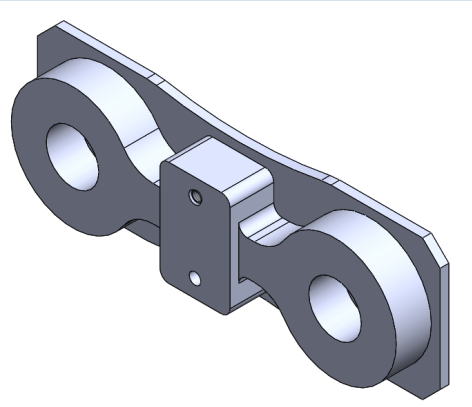

- Work through the example.

Using SolidCAM, create the CAM program for the manufacturing of the example part *Counter Plate*.

Document the results of your work.

3.1 Creating and Defining the CAM-Part

- Open in SolidWorks the example part *Counter Plate.SLDPRT*.

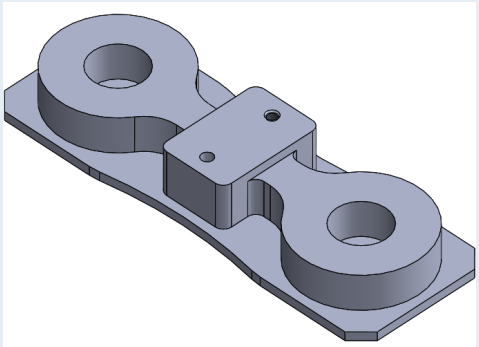

- Start SolidCAM and create a New Milling CAM-Part.

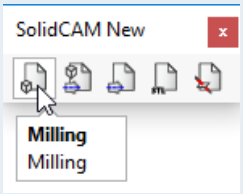

- Determine the location for storing the CAM data and confirm the CAM-Part creation.
- Select the post-processor (*Heidenhain_iTNC530_3X*).

3.1.1 Defining the Machine Coordinate System

- To define the Coordinate System(s), use the *Select Face* option in conjunction with *Top center of model box* to place the origin.

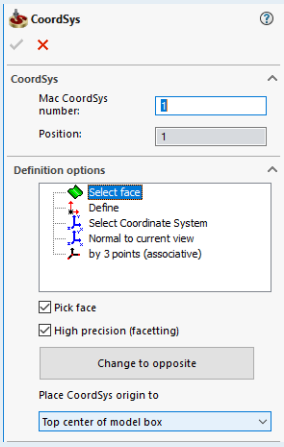

- Place the first Coordinate System (*1st Setup*) on the top center of the solid model.

- Place the second Coordinate System (*2nd Setup*) on the bottom center of the solid model.

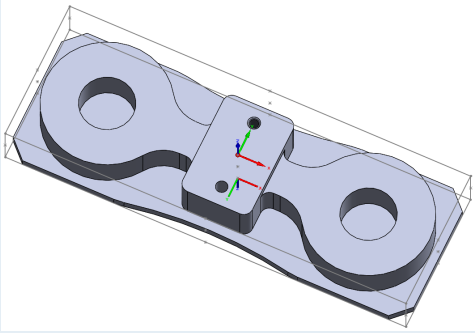

- Rename both origin positions and then exit the CoordSys Manager dialog box.

3.1.2 Defining the Stock and Target Models

- Define the Stock model using the method *Box*.

- Expand the surrounding box by 1 mm (0.04 in) for all directions except for the Z- direction.

- Specify a Z- offset of 4 mm (0.16 in).

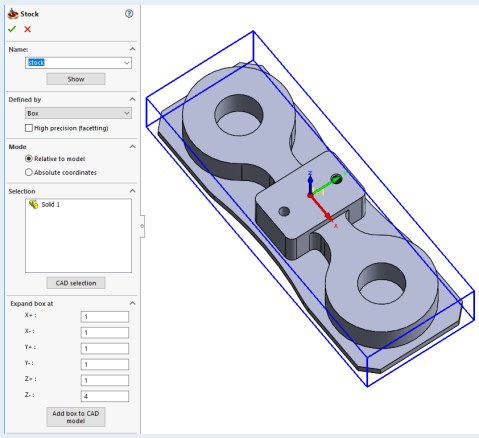

- Define the Target model and then confirm the CAM-Part Definition.

Notes

Notes

3.2 Adding a Face Milling Operation (1st Setup)

- Add a Face Milling operation to perform the machining of the top surface with a Ø63 mm (2.5 in) face mill.
- For the Technology, choose the *Hatch* strategy.
- Click *Save & Calculate*.
- Simulate the operation.

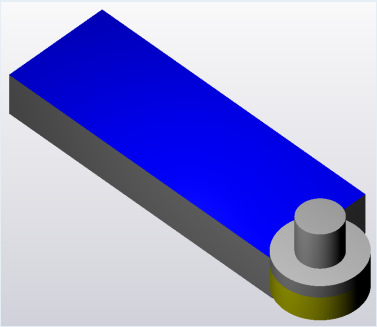

3.3 Milling the Step

A Pocket operation should be defined next to perform the machining of the first step (5 mm (0.2 in) down from the center feature). Two chains are defined, with the first (open pocket) chain being the outside contour of the Stock model and the second (island) chain being the uppermost contour of the workpiece.

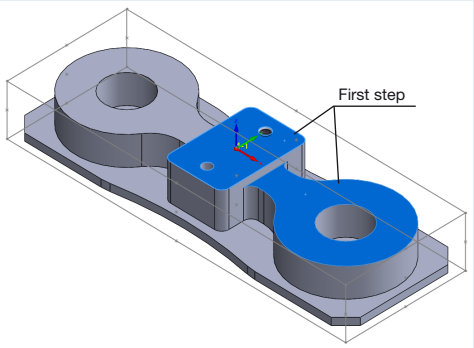

- Add a Pocket operation and then select the two chains as shown.

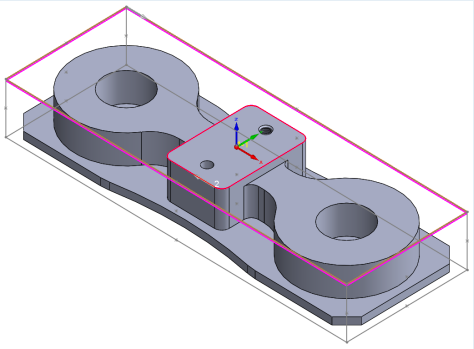

In Pocket milling, the first selected chain defines the contour of the pocket. Any subsequently selected chains that fall within the pocket are automatically treated as islands.

Open Pocket Definition

The following is a typical example of an Open Pocket definition.

- In the Chain List, RM click *1-Chain* and choose *Mark chain as open* from the appearing shortcut menu.

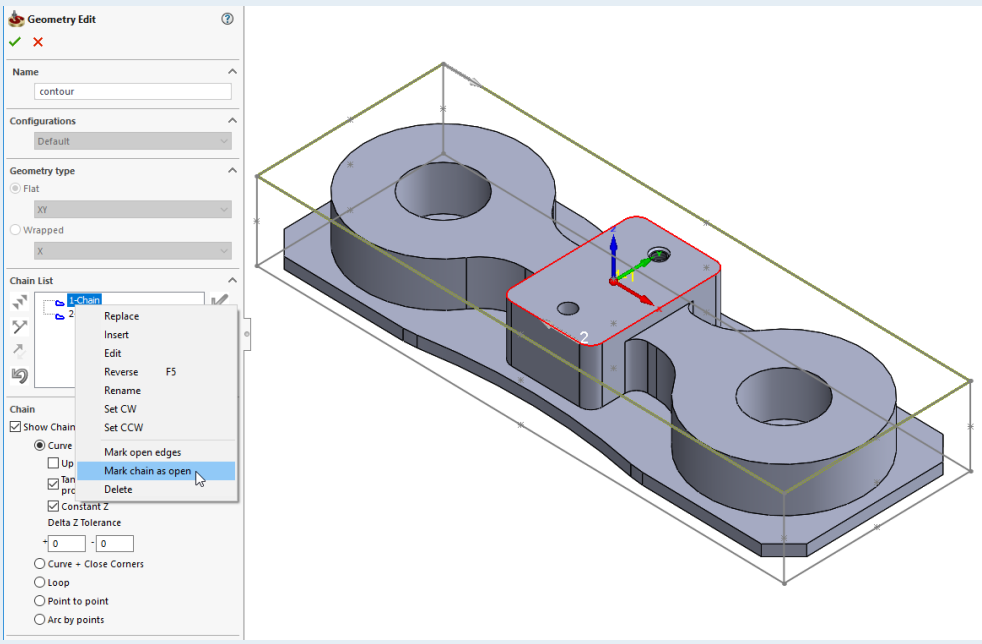

- For this operation, define a Ø20 mm (0.75 in) end mill.
- Pick the Upper level and Pocket depth directly on the solid model.
- On the Technology page, define the technological parameters as shown below.

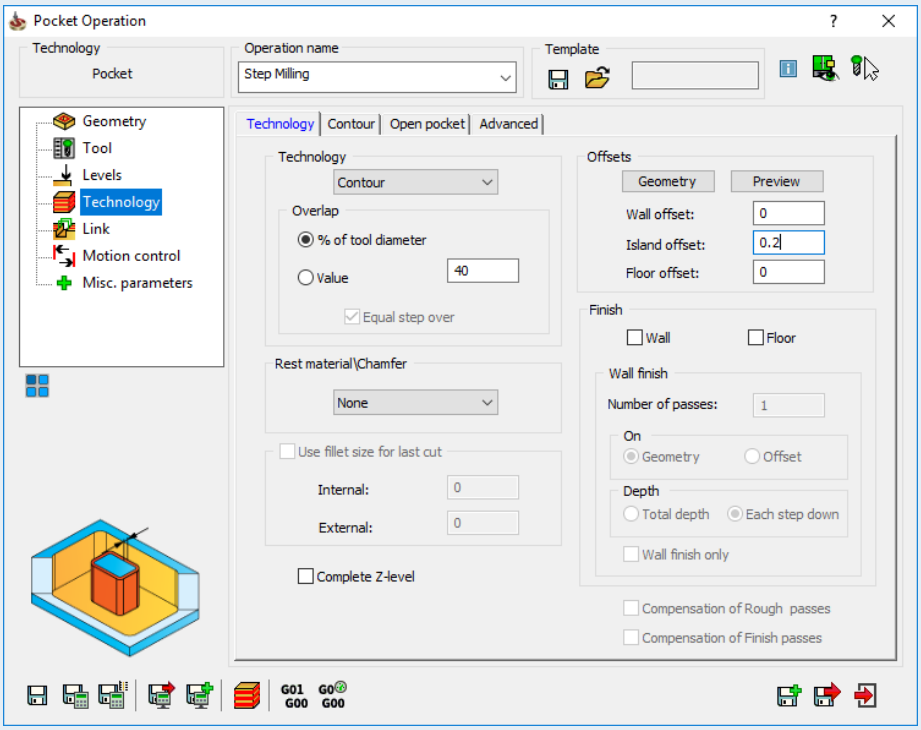

Notes

Notes

In the case of an open pocket with island, if you want to specify an allowance on the island walls, it must be entered in the Island offset field.

- Click *Save & Calculate*.
- Simulate the operation.

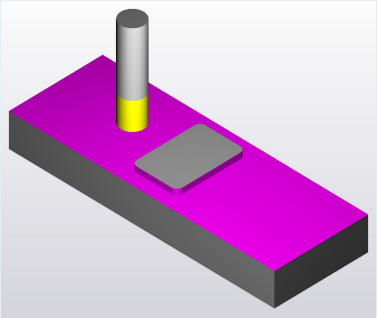

3.4 Milling the Lower Step

Another Pocket operation should be defined to perform the machining of the second step (20 mm (0.8 in) down from the first step).
For this operation, two chains are defined as they were previously. This time, the open pocket chain is again the outside contour of the Stock model and the island chain is the lower contour of the workpiece as shown.

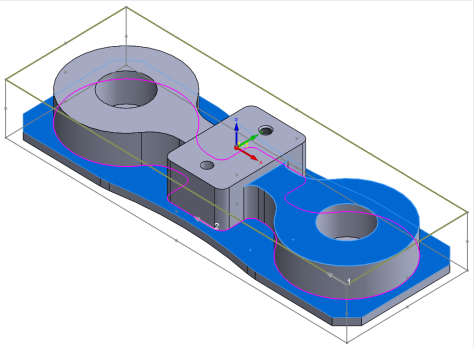

- Define the machining geometry as an open pocket.
- For this operation, use the already defined Ø20 mm (0.75 in) end mill.
- Pick the Upper level and Pocket depth directly on the solid model.
- Specify the technological parameters as defined in the previous operation.
- Click *Save & Calculate*.
- Simulate the operation.

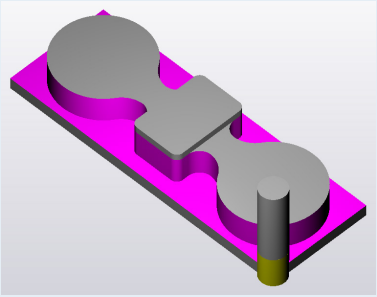

- In the SolidVerify Simulation window toolbar, click the *Show/Hide Rest material* button.

The Rest material is shown in red on the machined Stock model. Due to the large tool, the corners with a radius of 5 mm (0.2 in) were left unmachined.

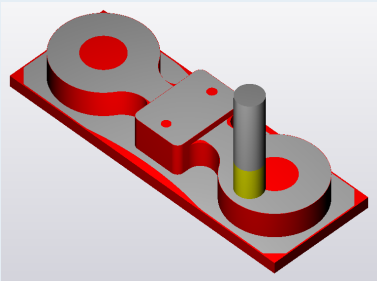

A Profile operation is used to remove the remaining material in the corners.

- Add a Profile operation and then select the chain on the bottom contour of the lower step for the Geometry definition.
- For this operation, define a Ø10 mm (0.3906 in) end mill with a Cutting length (CL) of 25 mm (1 in).
- Pick the Upper level and Profile depth directly on the solid model.
- On the Technology page, enable both the *Equal step down* and *Rough* check boxes and then enter a Max step down of 3 mm (0.12 in). Deselect the *Finish* check box.
- In the Rest material/Chamfer area, choose *Rest* from the drop-down list.

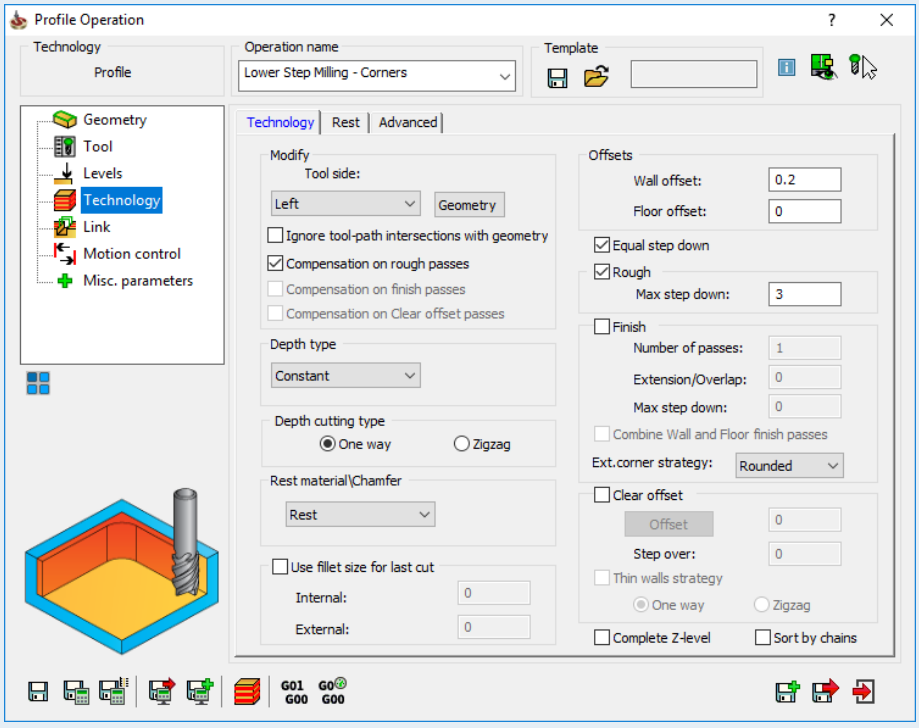

Notes

Notes

- On the Rest tab of the Technology page, define the Rest parameters as shown on the right.

- Define an *Arc* lead in/out with a Radius (value) of 5 mm (0.2 in).
- Click *Save & Calculate*.

- Simulate the operation.

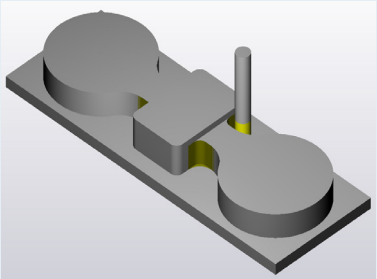

The remaining material in the corners is now removed and the entire profile has a continuous allowance of 0.2 mm (0.008 in) on the walls. Another Profile operation is used to perform the finish machining.

- Click the *Save & Copy* button to save the current operation data and automatically create a new operation with the same parameters.

The technological parameters are edited as shown below on the Technology page.

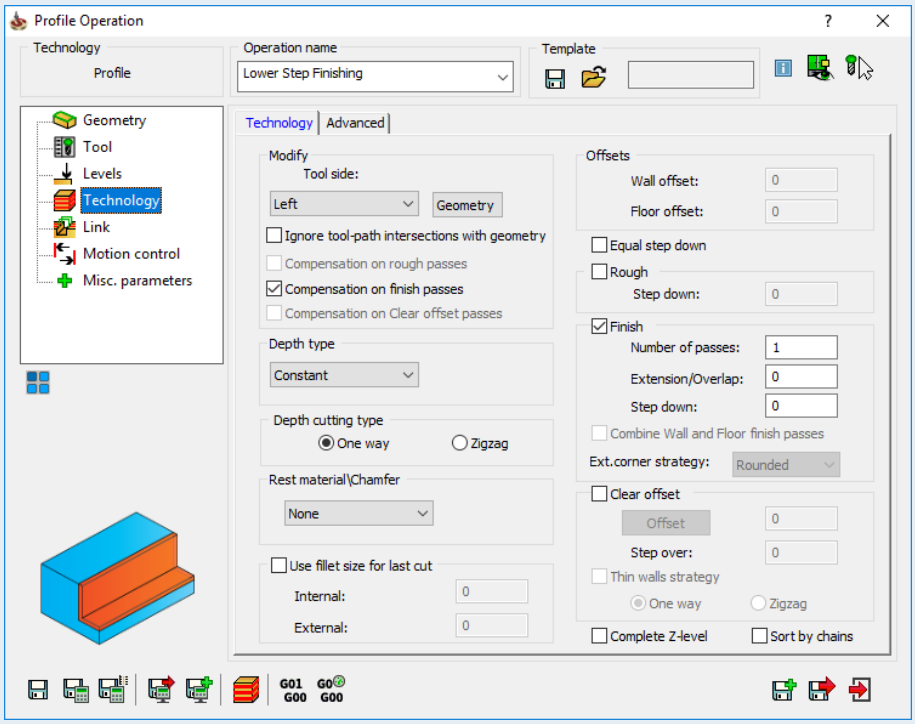

- You have to change the Rest material/Chamfer option to *None* and deselect both the *Equal step down* and *Rough* check boxes.

- Only enable the *Finish* option for this operation.

- Click *Save & Calculate*.

- Simulate the operation.

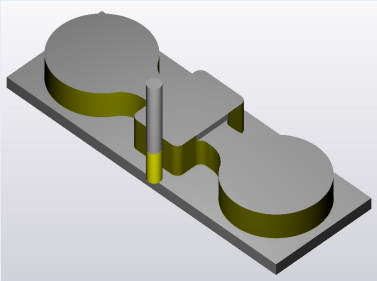

The lower step profile is finished, but material still remains on the wall between the center feature and the first step.

Another Profile operation is used to perform the finish machining of the center feature walls.

- Define the machining geometry by selecting the two edges as shown.

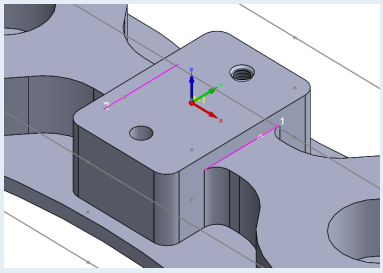

- As defined in the previous operation, use the same Ø10 mm (0.3906 in) end mill and an *Arc* lead in/out with a Radius of 5 mm (0.2 in).

- Click *Save & Calculate*.

- Simulate the operation.

- In the SolidVerify Simulation window, click *Show/Hide Rest material* to show the remaining material on the machined Stock model.

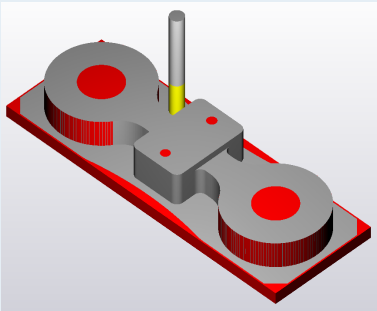

If the SolidVerify simulation still shows some small ridges of Rest material on the profile walls, it may be due to a large Facet tolerance setting.

The machining of the profiles for both steps is now completely defined.

Notes

Notes

3.5 Milling the Circular Pockets

The machining of the two circular pockets should be defined next.

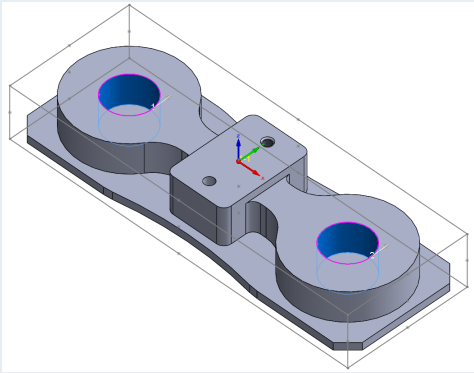

- Add a Pocket operation.
- Use a Ø12 mm (0.4688 in) end mill for roughing and a Ø10 mm (0.3906 in) end mill for finishing.
- Leave a Wall offset of 0.2 mm (0.008 in) for finishing.
- For Ramping, choose *Helical* from the drop-down list.

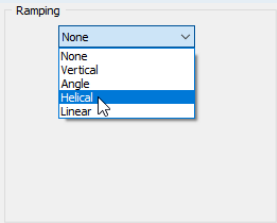

With this option selected, the tool will enter the material in a spiral movement according to the Ramping data.

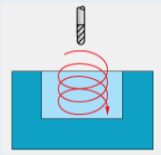

The Helical ramping parameters are defined in the Ramping area.

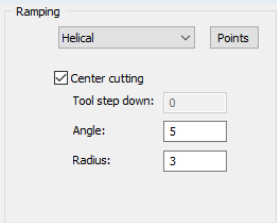

- Enter 5 degrees in the Angle field and specify a Radius parameter of 3 mm (0.12 in).
- Define an *Arc* lead out with a Radius of 2 mm (0.08 in).
- Click *Save & Calculate* and then simulate the operation.

- Using the *Save & Copy* functionality, add a new Pocket operation to perform the finish machining.

- Define the technological parameters to perform finishing of the pocket walls at the total depth.

- The compensation option *G4x* should also be used.

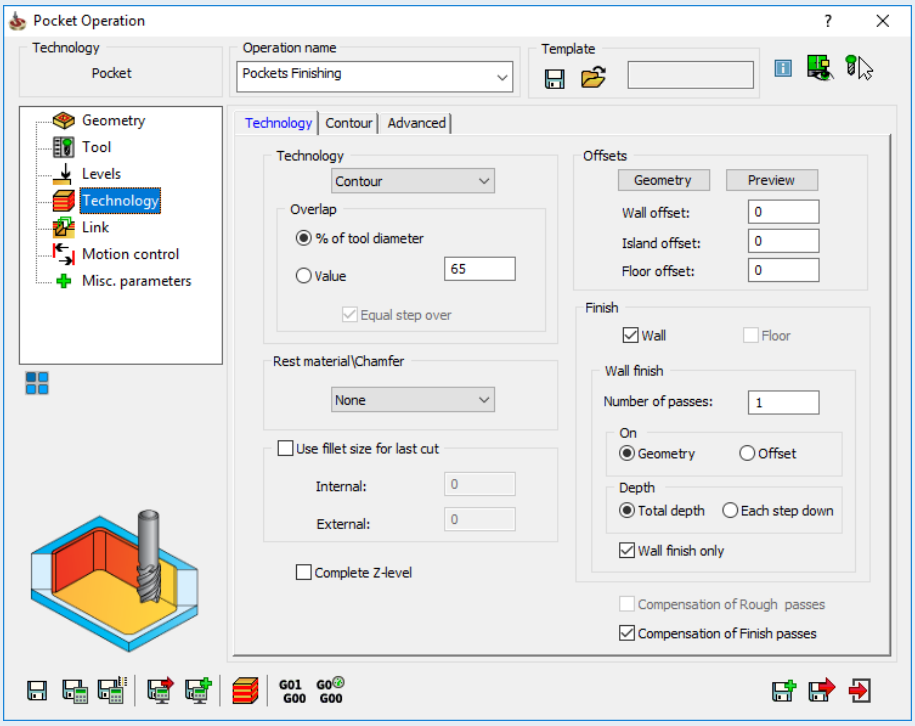

- In the Finish area, choose the *Wall finish only* check box.

- Define an *Arc* lead in/out with a Radius of 2 mm (0.08 in).

- Click *Save & Calculate*.

- Simulate the operation.

- In the SolidVerify Simulation window, show the remaining material on the machined Stock model.

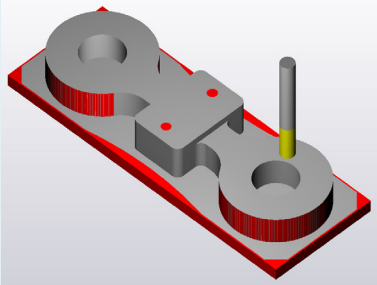

The machining of the circular pockets is now completely defined.

Notes

Notes

3.6 Milling the Outside Contour

A Profile operation should be defined next to perform the machining of the outside contour.

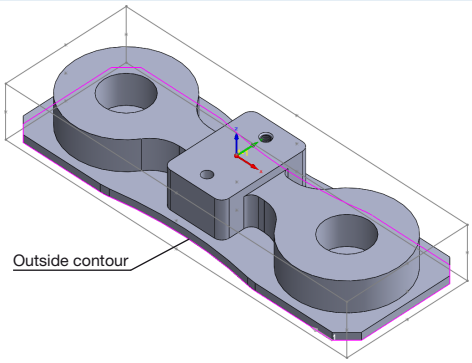

- Use a Ø20 mm (0.75 in) end mill for roughing and a Ø16 mm (0.625 in) end mill for finishing.
- Leave a Wall offset of 0.2 mm (0.008 in) for finishing.
- Pick the Upper level and Profile depth directly on the solid model.
- Enter a Delta depth value of -0.5 mm (-0.02 in).

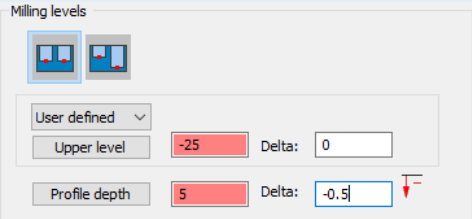

- In the Modify area of the Technology page, click the *Geometry* button.
- In the Start position area of the Modify Geometry dialog box, *Shift (% of whole chain)* is selected with a default value of 0.

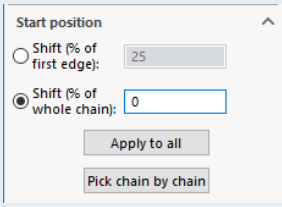

The tool will start the machining at the beginning point of the whole chain.

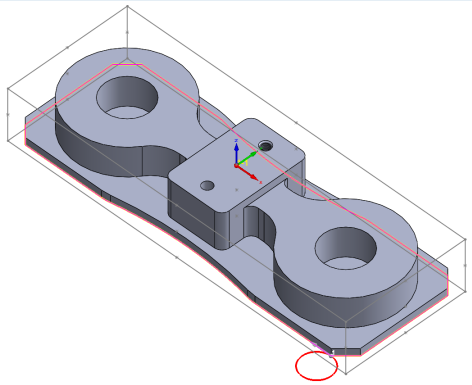

For closed chains, you can define the shifting of the start position. The start point is defined as a percentage of the chain length (either first edge or whole chain). You can define the start position shifting by entering the Shift value or by picking the position on the solid model.

For open chains, the Start position area is disabled.

- Switch to the *Link* page to define the Lead in and Lead out parameters.

- Select the tool approach and retreat options and then fill in the fields as shown below.

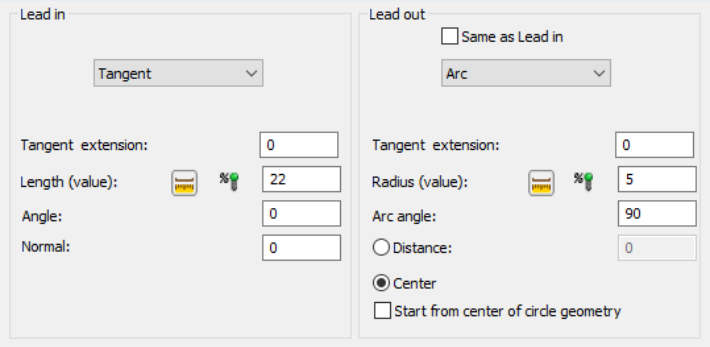

- Click *Save & Calculate*.

- Simulate the operation.

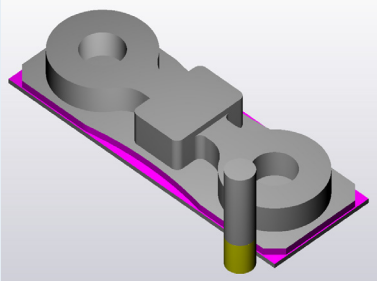

- Click *Save & Copy*.

- In the copied Profile operation, make the appropriate edits for finishing the outside contour.

- Define a Ø16 mm (0.625 in) end mill for the operation.

- Click *Save & Calculate*.

- Simulate the operation.

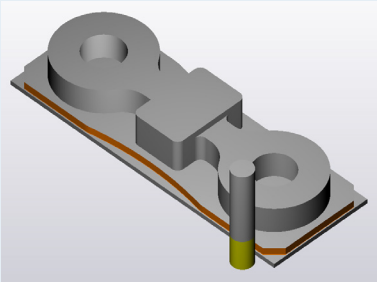

Notes

Notes

3.7 Drilling the Holes

In the 1st Setup, the drilling still needs to be defined for both the M6 Tapped Hole and the through hole.

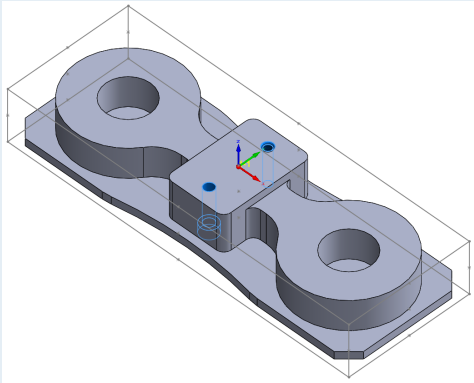

- Define the Drilling operations to perform the centering of both holes as well as the drilling and tapping.
- Define the preliminary center drilling of the through hole deep enough to avoid deburring of the hole later.
- Define the preliminary center drilling of the tapped hole deep enough to accept a countersunk screw with a head of 90°.
- Simulate all the operations defined in the 1st Setup.

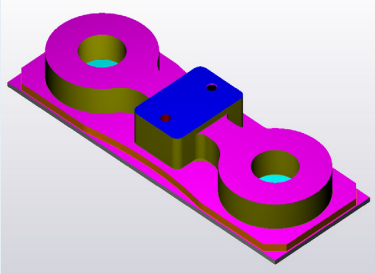

3.8 Adding a Face Milling Operation (2nd Setup)

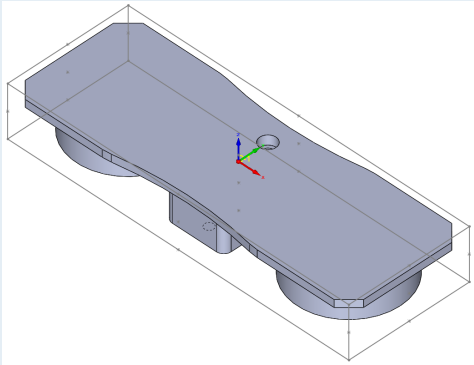

- Add a Face Milling operation to perform the machining of the bottom surface in the 2nd Setup.
- On the Geometry page, choose *MAC 2 (1- 2nd Setup)* from the CoordSys drop-down list.
- Use the Ø63 mm (2.5 in) face mill and choose the *Hatch* strategy for the Technology.
- Click *Save & Calculate*.
- Simulate the operation.

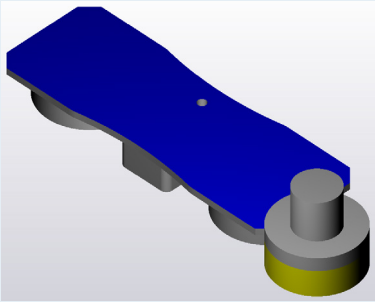

3.9 Making a Counterbore for a Cylinder Head Screw

- Using a Pocket operation, define the machining of the counterbore to accept a cylinder screw with a head of Ø8 mm (0.315 in).
- Simulate the operation.

- Generate the GCode for all operations.

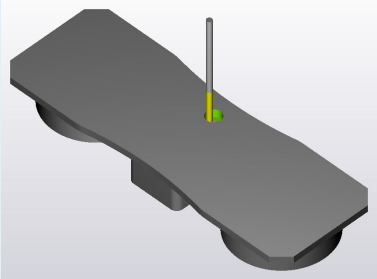

The CAM program for the workpiece *Counter Plate* is completed.

Exercise

A manufacturer's label needs to be added to the bottom surface of the Counter Plate.

- Label the workpiece with your name using an Engraving operation.

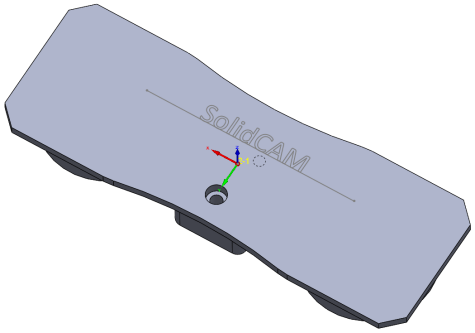

3.10 Engraving

- Pick on the bottom surface as shown and open a new sketch.

- Using *Normal To*, align the view with the sketch plane.

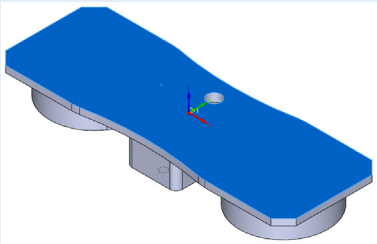

- Sketch a *Line* as shown.

The line is used to determine the text position and direction. If you want text that is curved, you should use a spline instead.

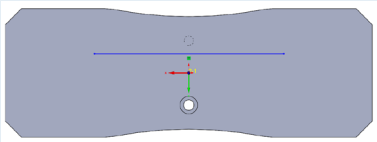

- In the Sketch toolbar, click the *Text* tool.

Notes

Notes

- When the Sketch Text PropertyManager appears, select the newly drawn line for the Curves definition.
- In the Text area, type your name.
- Deselect the *Use document font* option and then click the *Font...* button to choose your own font.

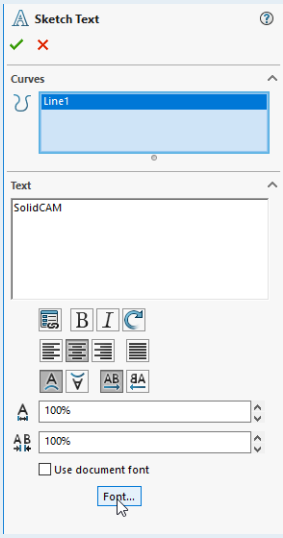

- In the Choose Font dialog box, select your desired Font and Font Style, set the Height at 36 Points and then click *OK*.

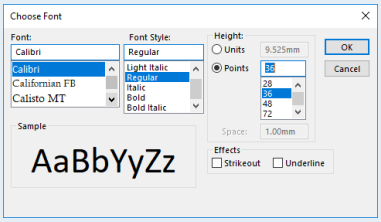

- Click *OK* to exit the PropertyManager.

- Exit the sketch.

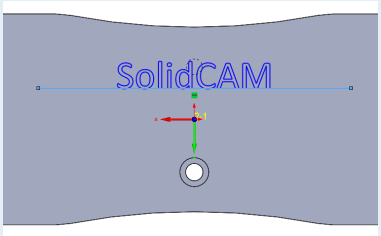

- Now add a 2D Engraving operation.
- On the Geometry page, choose *MAC 2 (1- 2nd Setup)* from the CoordSys drop-down list and then define the machining geometry.
- Click the *New* button and in the Geometry Edit dialog box, use the *Multi-chain* selection method.

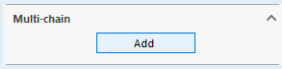

- In the Type area of the Chains Selection dialog box, select the *Text* option and then pick on the text in the SolidWorks Graphics Area.

The text is highlighted.

- Click *OK*.

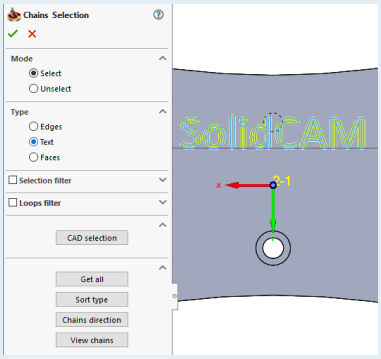

From the contours of the text, SolidCAM automatically creates the geometry chains.

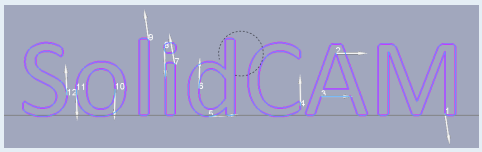

In the Chain List, the individual chains created from the text contours are displayed.

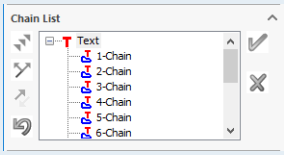

- Confirm the Geometry definition by clicking *OK*.

- For this operation, define an appropriate engraving tool or use the already defined spot drill.
- Enter an Engraving depth value of 0.05 mm (0.002 in).

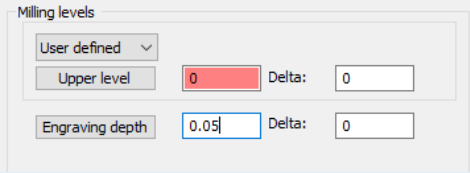

- In the Modify area of the Technology page, click the Tool side drop-down menu and choose *Center* from the list.

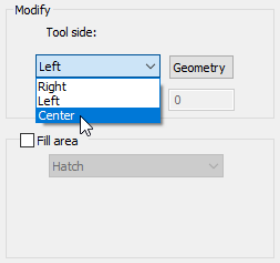

With this option selected, the center of the tool will cut exactly on the chain geometry.

- Click *Save & Calculate* and then simulate the operation.
- Generate the GCode for all operations.

Notes

Notes

Course_Materials
Part file: Side Part
Drawings > PDFs

Manufacturing Task: Side Parts

- Now create the CAM program in SolidCAM for the component *Side Part*. When the part programming is completed, generate the GCode.

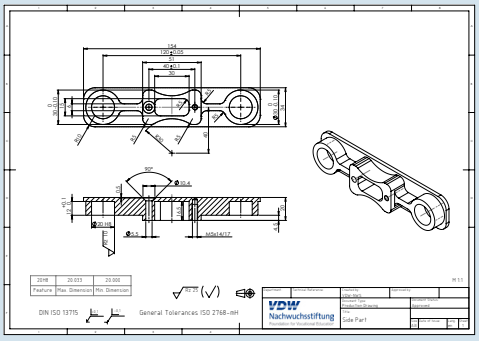

The steps necessary to perform this task were learned and applied in the just completed example.

An enlarged view of the production drawing can be found in the Appendix as well as the Course_Materials folder.

After the part programming is completed in SolidCAM for all components of the assembly *Adjustable Workpiece Stop*, the GCode is generated.

The generated GCode files must then be sent to the CNC-Machine. This is typically carried out over a network connection (assuming the machine is network capable). Otherwise, the GCode files can be transferred via a flash drive (USB stick).

If your CNC-Machine has, for example, a Heidenhain Controller, you can download free transfer software (TNCremo) at www.heidenhain.com. This type of software enables you to easily send your CNC programs to the machine, make edits if necessary and even send the edited programs back to your computer.

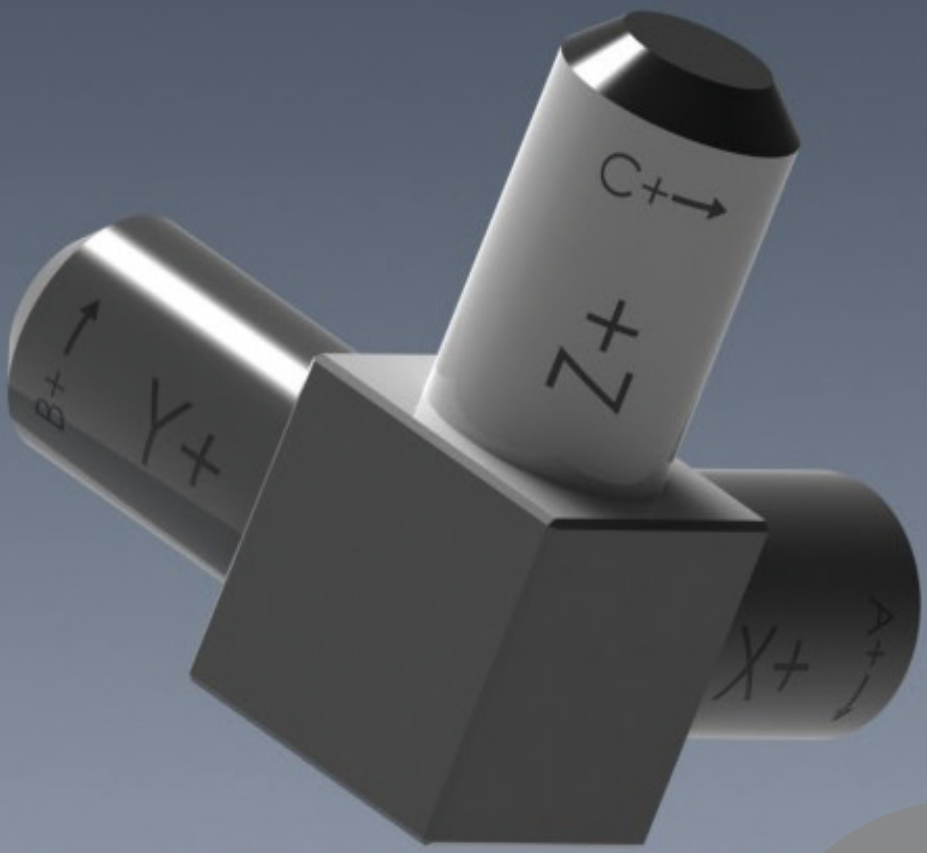

4

Multi-sided Machining

Manufacturing a Coordinate Cube

Lesson 4:

Manufacturing a Coordinate Cube

Notes

Create the CAM program for the component *Coordinate Cube* and then generate the GCode file.

The machining will occur in one setup.

Use the drawing on the next page for referencing features and dimensions.

Keep in mind that after defining the Stock and Target models, you should also insert and define a fixture.

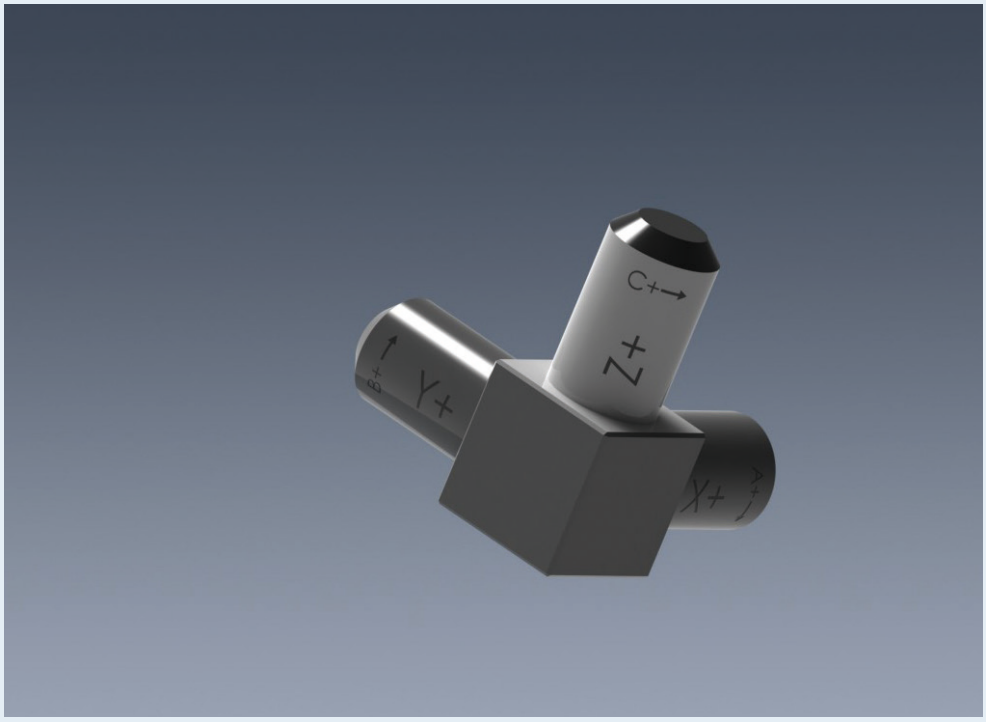

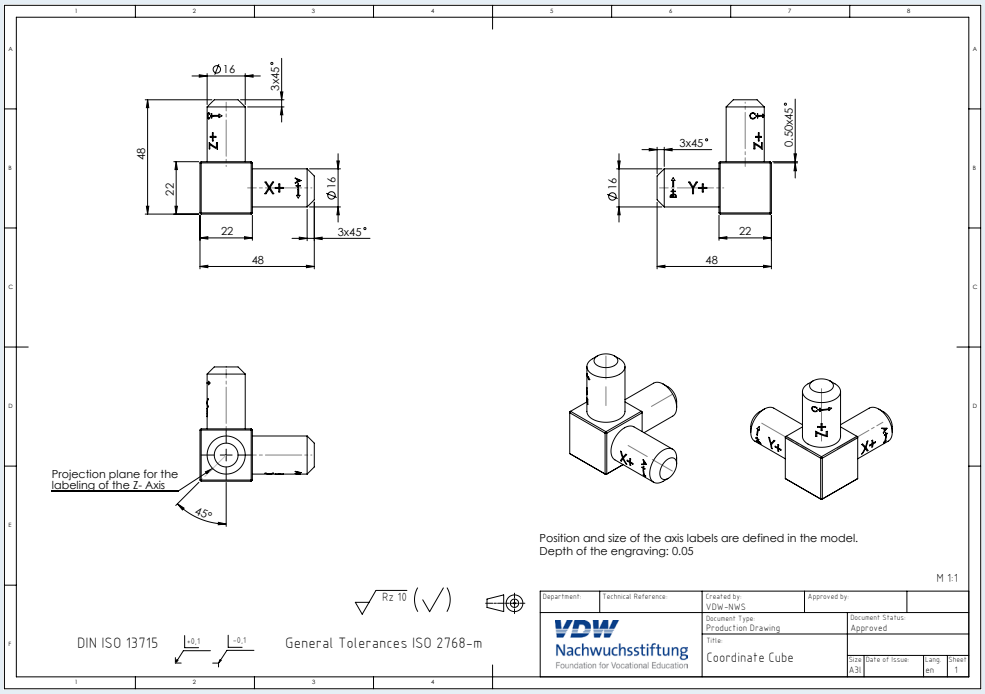

On the following pages, an example part is used to illustrate the steps that are necessary to complete this task.

- The manufacturing task for the component *Coordinate Cube* can be effectively performed by first completing the example.

Notes

Chapter 4

Machining with a Multiaxis Machine

Notes

Course_Materials
Part file: Distribution Block
Drawings > PDFs

Example Part: Distribution Block

All the steps and information needed to complete the manufacturing task are provided in this example.

- Work through the example.

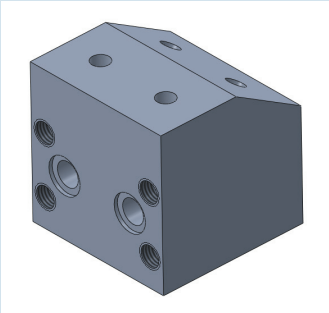

Using SolidCAM, create the CAM program for the manufacturing of the example part *Distribution Block*.

Document the results of your work.

4.1 Multi-sided Machining and its Basics

Using a multiaxis machine with two rotary axes, a workpiece can be manufactured from several sides. Once the rotary axes are locked in a tilted position, the manufacturing is performed in the linear axes (X, Y and Z). For this reason, Multi-sided Machining is often referred to as 3+2 Axis Machining respectively.

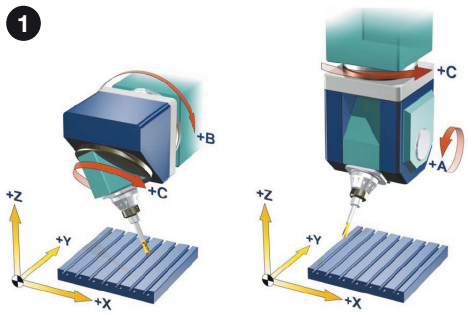

Depending on the machine design and the rotary axes arrangement, there are:

1. Head/Head,
2. Table/Table, or
3. Head/Table Gantry Machines.

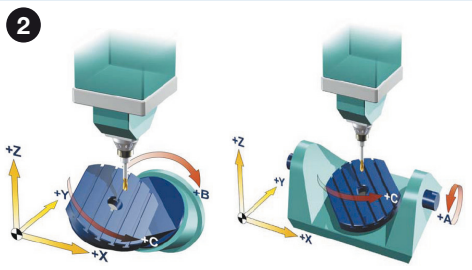

Different machines accomplish the rotary motion in different ways (i.e., kinematics). A capable machine can often manufacture all the machined sides of a part in one setup.

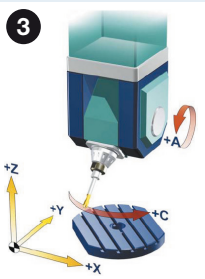

The Machine Simulation mode in SolidCAM is an important tool, which enables you to perform the machining simulation and tool path verification using the kinematics of the CNC-Machine.

In Multi-sided Machining, it is especially important for the programmer to avoid possible collisions between the positioning movements of the tool and the workpiece on the machine table.

On a multiaxis machine of increased complexity, the setup time can be considerably reduced when machining a workpiece with up to five sides. To eliminate the need for setting up multiple work offsets at the machine, SolidCAM's post-processor can also be setup to handle all rotations and work offset shifting.

Compared to Simultaneous 5-Axis Machining, Multi-sided Machining only engages three axes continuously with the 4th and 5th axes used to orient the cutting tool into a fixed position.

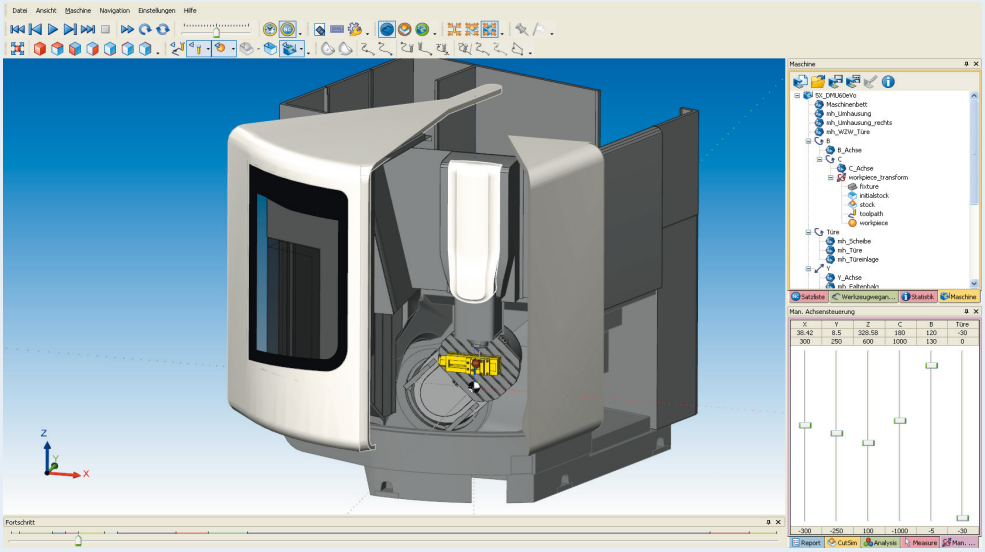

Using SolidCAM's Machine Simulation, the above illustration shows the manufacturing of the example part *Distribution Block*, which is programmed on the following pages.

Notes

Course_Materials
Machine files > Distribution Block - Machine Simulation

Notes

4.2 Creating and Defining the CAM-Part

- Open in SolidWorks the example part *Distribution Block.SLDPRT*.
- Start SolidCAM and determine the orientation of the workpiece.
- Select the post-processor suitable for a 5-Axis milling machine (*Heidenhain_iTNC530_5X*).

4.2.1 Defining the Machine Coordinate System

There are three sides of the Distribution Block that require machining (highlighted in blue).

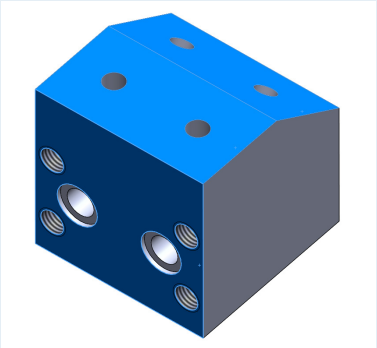

For this exercise, one Machine Coordinate System should be defined with different positionings for each of the machined sides.

In Multi-sided Machining for 5-Axis CNC-Machines, the SolidCAM post-processor uses the specific macro language of the Controller to create the positioning relative to the Machine Coordinate System.

- Use the option *Top corner of model box* and place the origin as shown by picking on the top face of the solid model.

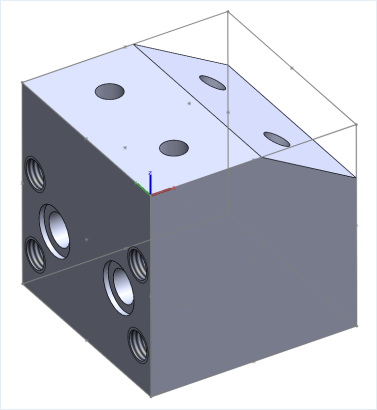

- Confirm the Coordinate System definition and then accept the Default machining levels.

The defined Machine Coordinate System appears in the CoordSys Manager dialog box.

- RM click *1- Position* and choose *Add...* from the shortcut menu.

The CoordSys dialog box is displayed again. SolidCAM automatically assigns the next sequential number for the newly added position (as shown in the Position field).

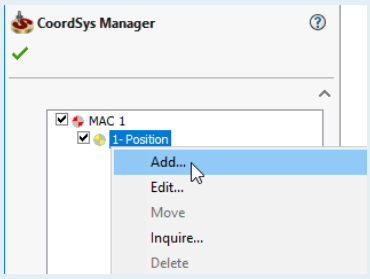

- Select *Define* from the Define CoordSys options list.

The Define option enables you to define the origin position and axes orientation by selecting vertices (points).

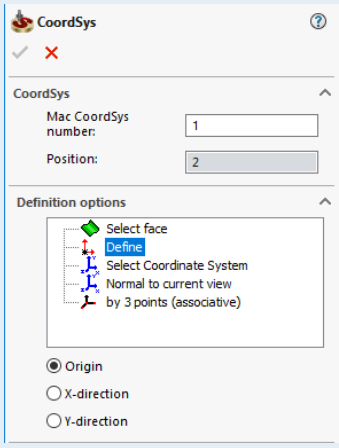

- Pick on the vertex at the start of the angled surface as shown.

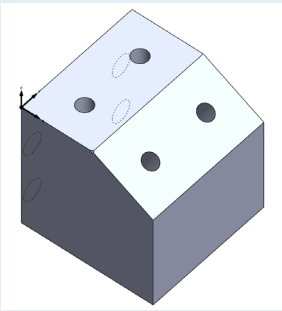

- Next, you have to define the orientation of the X-Axis. Pick on the side edge of the angled surface as shown.

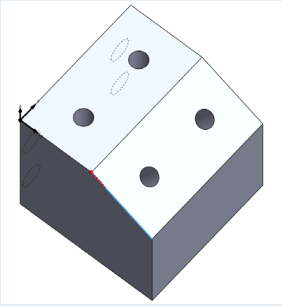

- Finally, you have to define the orientation of the Y-Axis. Pick on the top edge of the angled surface as shown.

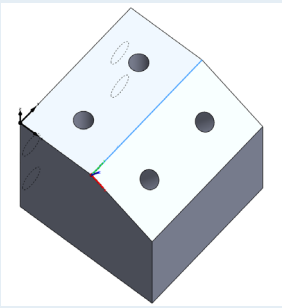

Notes

Notes

The new Coordinate System position is now created.

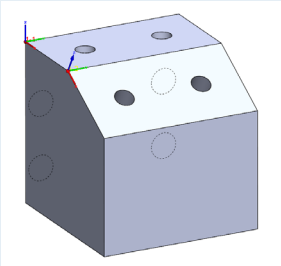

- Click *OK* to confirm the new origin position definition.

The CoordSys Data dialog box is displayed, which now shows the positioning shift and rotation relative to the Machine Coordinate System.

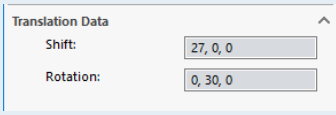

- In the Levels: Planar area, make sure the Clearance level has a specified value of at least 25 mm (1 in).

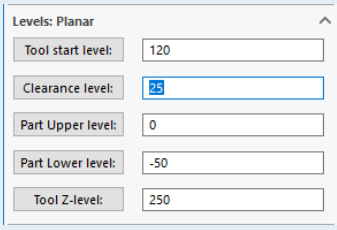

When the origin position or axes orientation is inside the Stock model, the correct Clearance level is important in avoiding possible collisions.

- Confirm the CoordSys Data dialog box by clicking *OK*.

In the CoordSys Manager, the newly created origin position is now added to the Machine Coordinate System as a second position (2- Position).

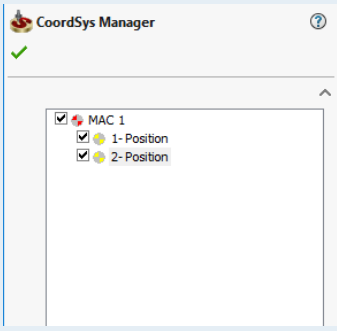

- Now add the third position as shown.
- Proceed in the same way as when defining the second position.

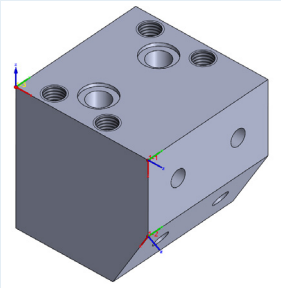

4.2.2 Defining the Stock and Target Models

- Define the Stock model using the method *Box* and specify an offset of 1 mm (0.04 in) for the Z+ direction.

For this exercise, leave the remaining offsets at 0.

- Define the Target model.

- Confirm the CAM-Part Definition and exit the Milling Part Data dialog box.

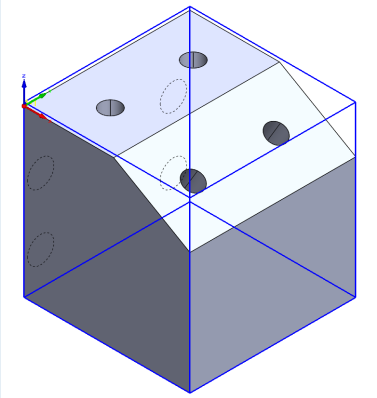

4.3 Inserting Fixtures

For the manufacturing of the Distribution Block, use the fixture that was provided in Lesson 2.

- Insert the fixture into the CAM Project.

- Clamp the Distribution Block so that the surface of 3- Position is flush with the lateral surface of the fixed vise jaw as shown.

- Define the fixture in SolidCAM as a clamping device.

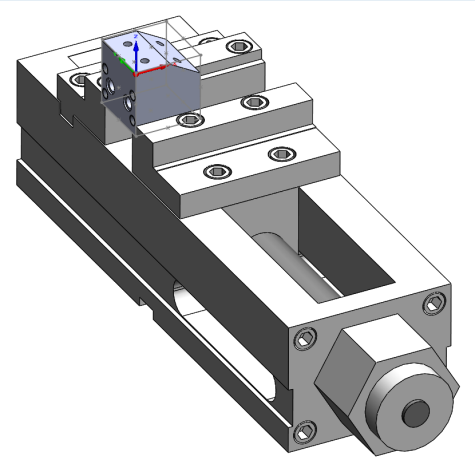

Notes

Notes

4.4 Milling the Top and Angled Surfaces

In this step, define the machining of the top and angled surfaces of the Distribution Block using a Ø63 mm (2.5 in) face mill.

- Add a Face Milling operation to perform the machining of the top surface.

The first position (1- Position) of the Machine Coordinate System is the default selection.

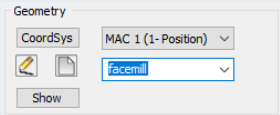

The Face Milling geometry is automatically generated and is also the default selection.

- Define the *Tool* and the *Levels*.
- For the Technology, choose the *One Pass* strategy.
- Click *Save & Calculate* and then simulate the operation.

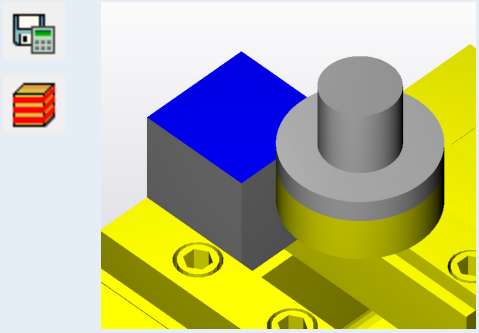

To avoid an unnecessary tool change, the machining of the angled surface should be defined next.

- Add a new Face Milling operation.

Since this surface is located on a different work plane, the corresponding Coordinate System position must be defined for the operation.

- On the Geometry page, choose *MAC 1 (2- Position)* from the CoordSys drop-down list.

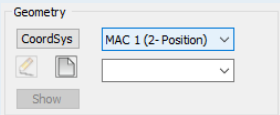

- Define the machining geometry.

- In the Face Milling Geometry dialog box, choose *Faces* for the type of selection method.

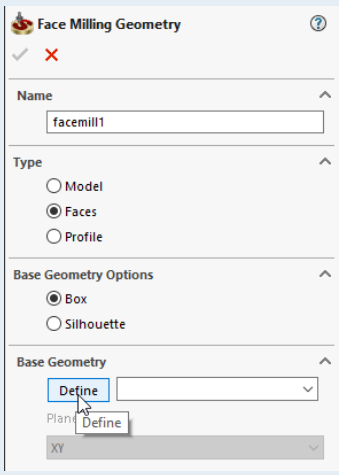

In this case, the option *Model* would result in too large a geometry as the surrounding outline of the Target model is projected from the XY-plane perspective.

- In the Base Geometry area, click the *Define* button.

The Select Faces dialog box is displayed.

- Pick on the angled surface and then click *OK* to confirm the selection.

- To confirm the Geometry definition and close the Face Milling Geometry dialog box, click *OK*.

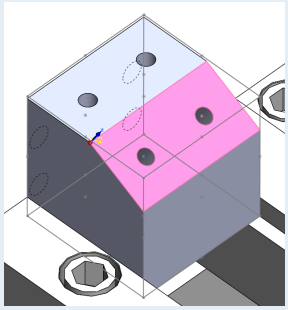

- After selecting the tool, switch to the *Levels* page to define the Milling levels for the operation.

For this operation, you can define the Upper level as the top corner of the 3D sketch as shown.

The Face depth can be picked directly on the solid model.

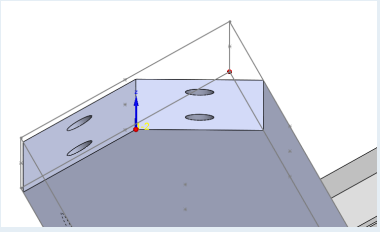

- Specify a Step down of 4 mm (0.1575 in).

- For the Technology, choose the *One Pass* strategy.

- Click *Save & Calculate* and then simulate the operation.

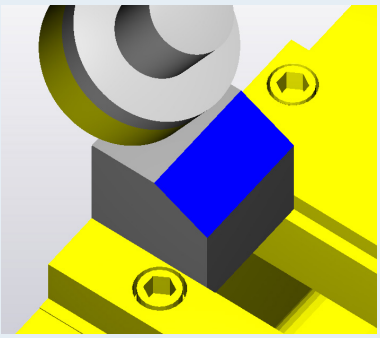

Notes

Notes

4.5 Centering the Holes

In this step, define the preliminary center drilling of the holes in the Distribution Block using a Ø10 mm (0.3937 in) spot drill.

- Add the Drilling operations to perform the centering of the holes.
- Since the tool axis is already in position, start with the holes on the angled surface and then define the centering of the holes on the top surface and finally the holes on the lateral surface.
- If possible, specify the drilling depth to avoid deburring of the holes later.

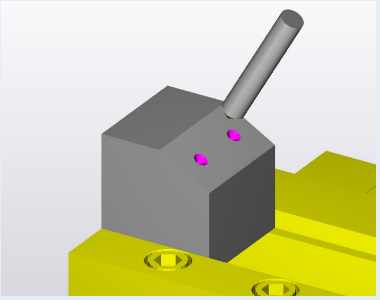

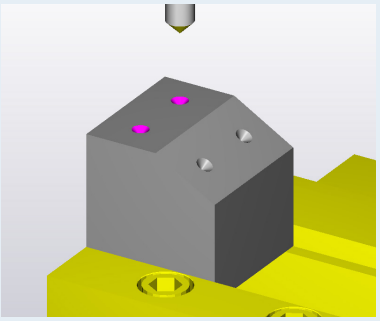

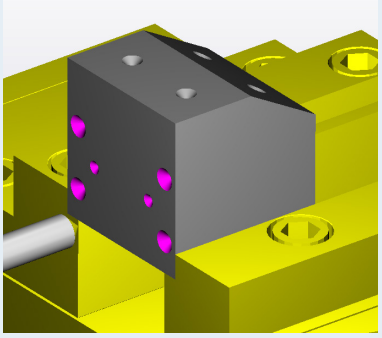

T!P Geometry definitions (e.g., contours, drill positions) can be used multiple times in a CAM Project. Therefore, it may be useful to give the geometries a recognizable name. You can use, for example, the same geometry defined in the above operations to perform the drilling of the holes afterwards. Already defined geometries can be selected from the Geometry drop-down list as shown.

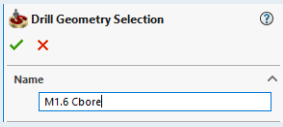

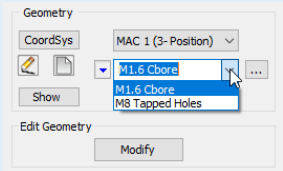

4.6 Drilling the Holes

In this step, the drilling of the Distribution Block holes are defined.

The sequence of machining operations is important in this exercise.

As shown in the sectional view on the right, the holes drilled in both the top and angled surfaces intersect with the laterally drilled holes.

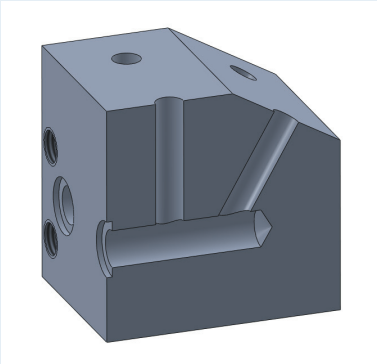

To prevent the larger drill from making interrupted cuts, those holes should be drilled first.

- Define the drilling of the M8 Tapped Holes and the Ø8 mm (0.316 in) holes.
- Define the machining of the Ø12 mm (0.475 in) counterbores using a Pocket operation with a suitable end mill.

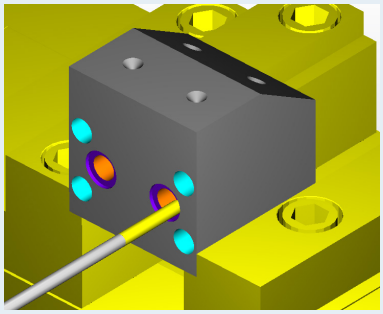

- Define the drilling of the Ø6 mm (0.238 in) holes on the top surface.

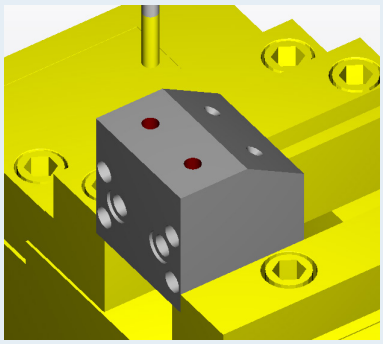

- Define the drilling of the Ø6 mm (0.238 in) holes on the angled surface.

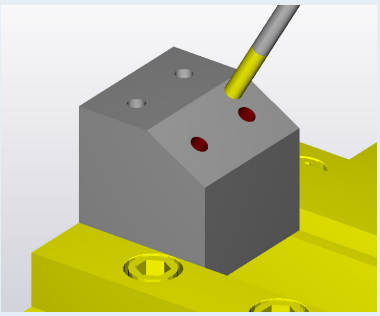

- Generate the GCode for all operations.

```
G01
G00
```

The CAM program for the workpiece *Distribution Block* is completed.

Notes

Notes

Manufacturing Task: Coordinate Cube

- Now create the CAM program in SolidCAM for the component *Coordinate Cube*. When the part programming is completed, generate the GCode.

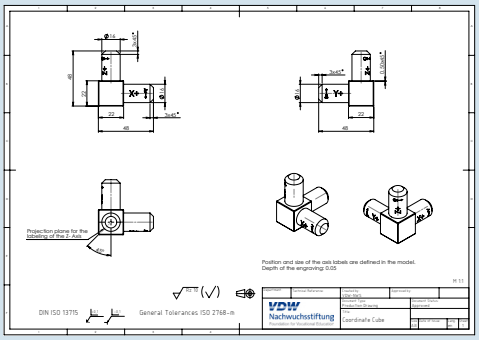

The steps necessary to perform this task were learned and applied in the just completed example.

An enlarged view of the production drawing can be found in the Appendix as well as the Course_Materials folder.

Course_Materials
Part file: Coordinate Cube
Drawings > PDFs

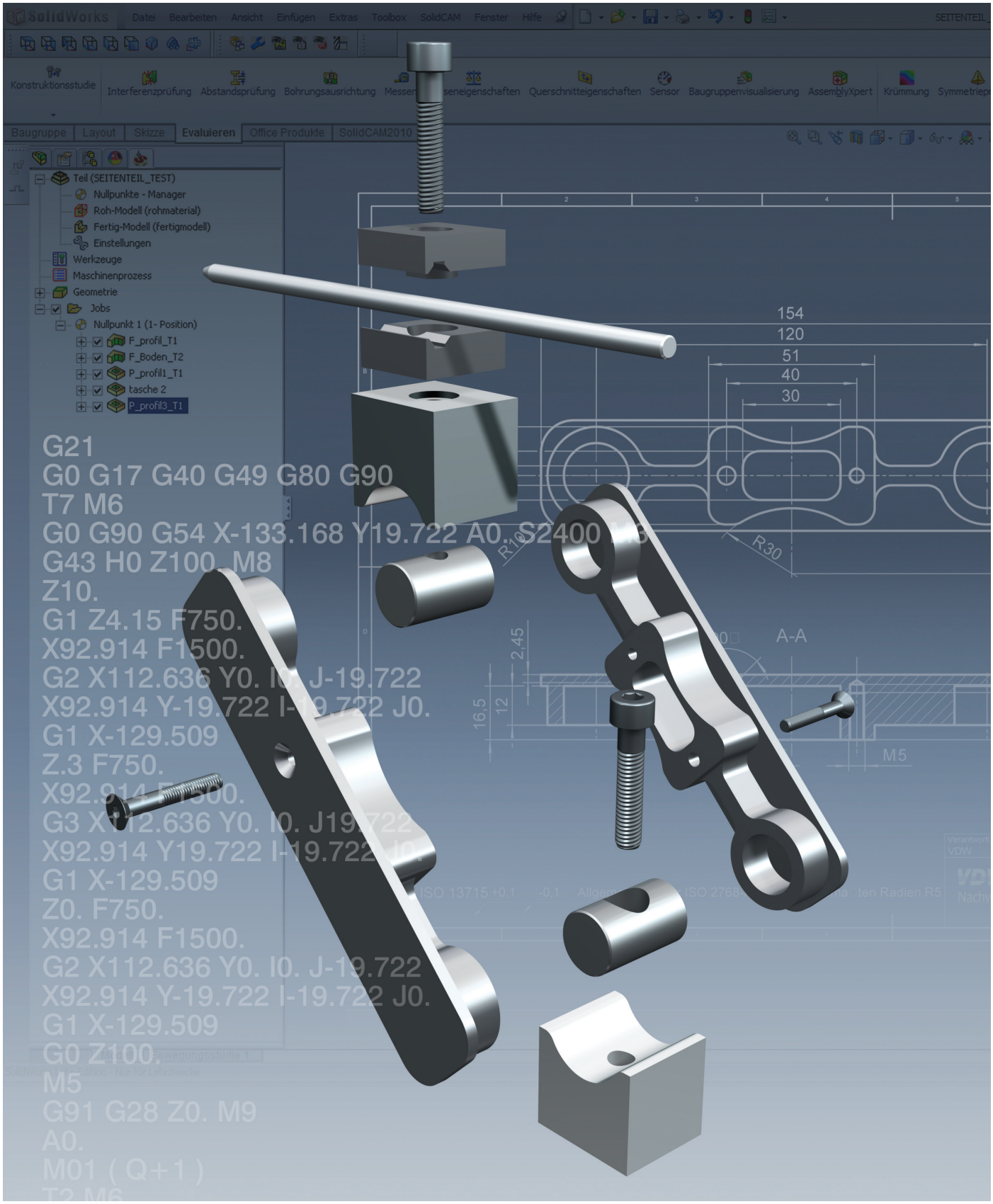

CAM Appendix

Drawings

Notes

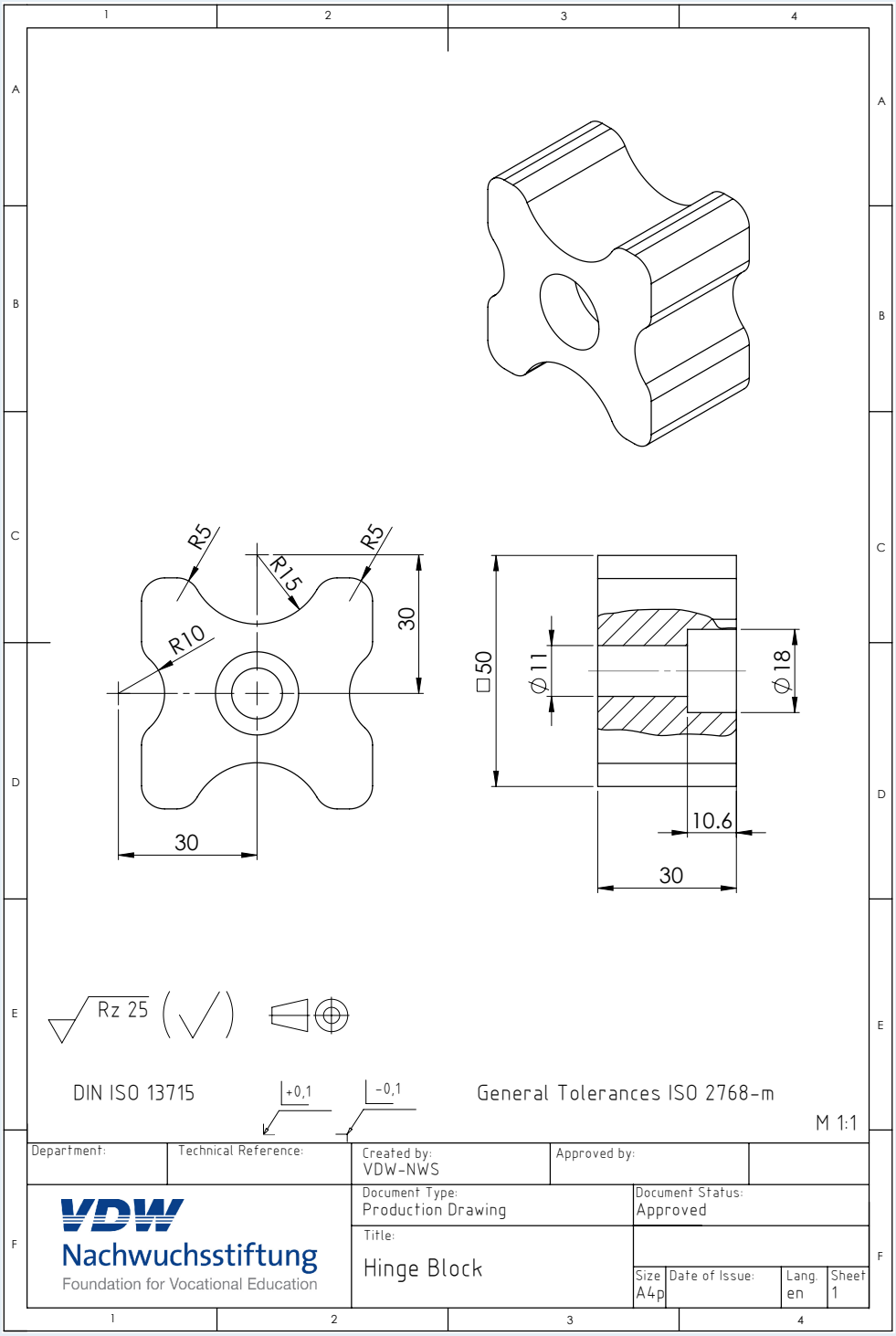
R5
R5
R15
R10
30
30
□50
⌀11
⌀18
10.6
30
Rz 25
DIN ISO 13715
+0,1
-0,1
General Tolerances ISO 2768-m
M 1:1
Department:
Technical Reference:
Created by:
VDW-NWS
Approved by:
Document Type:
Production Drawing
Document Status:
Approved
Title:
Hinge Block
Size
A4p
Date of Issue:
Lang.
en
Sheet
1
VDW
Nachwuchsstiftung
Foundation for Vocational Education

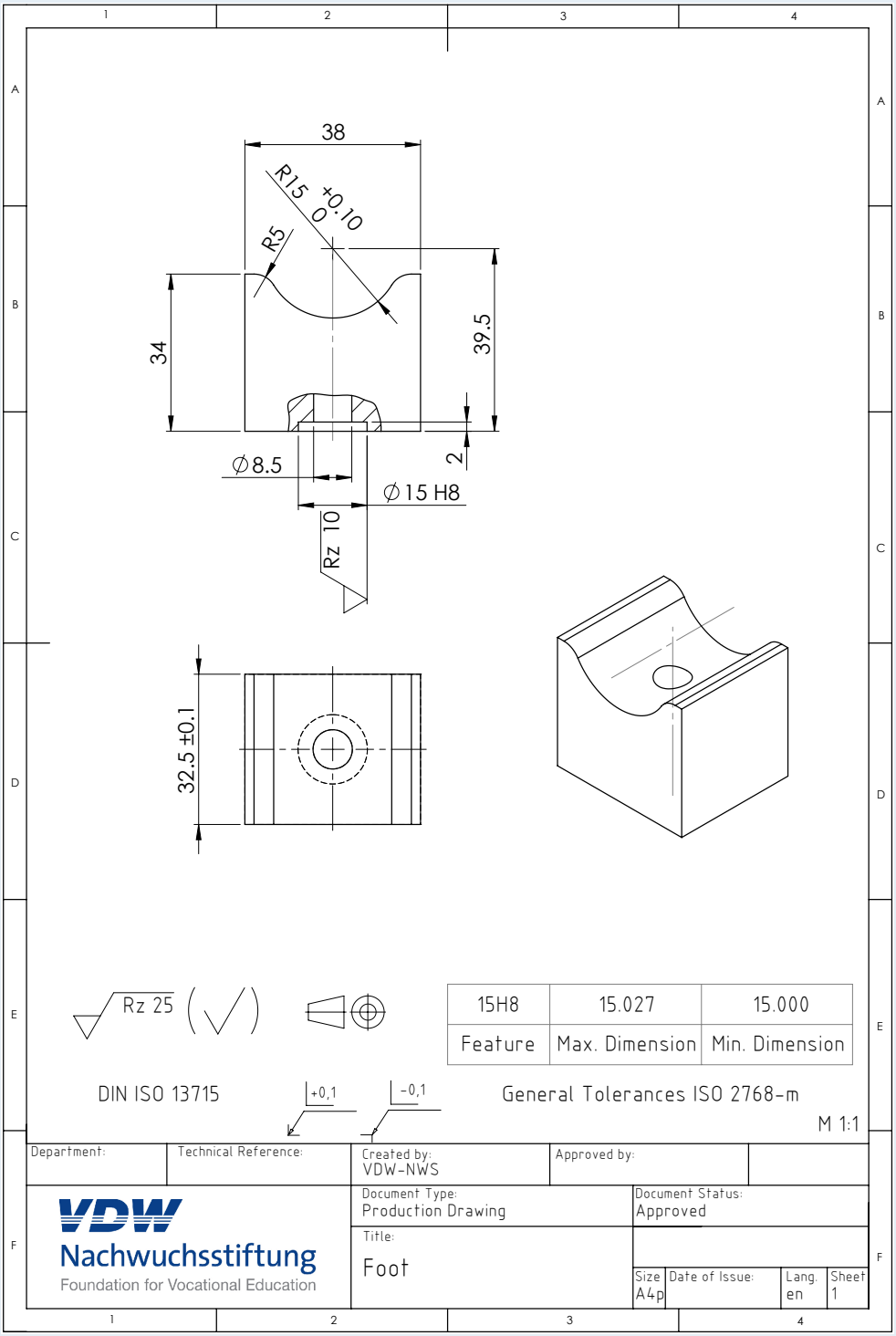

15H8	15.027	15.000
Feature	Max. Dimension	Min. Dimension

Notes

Notes

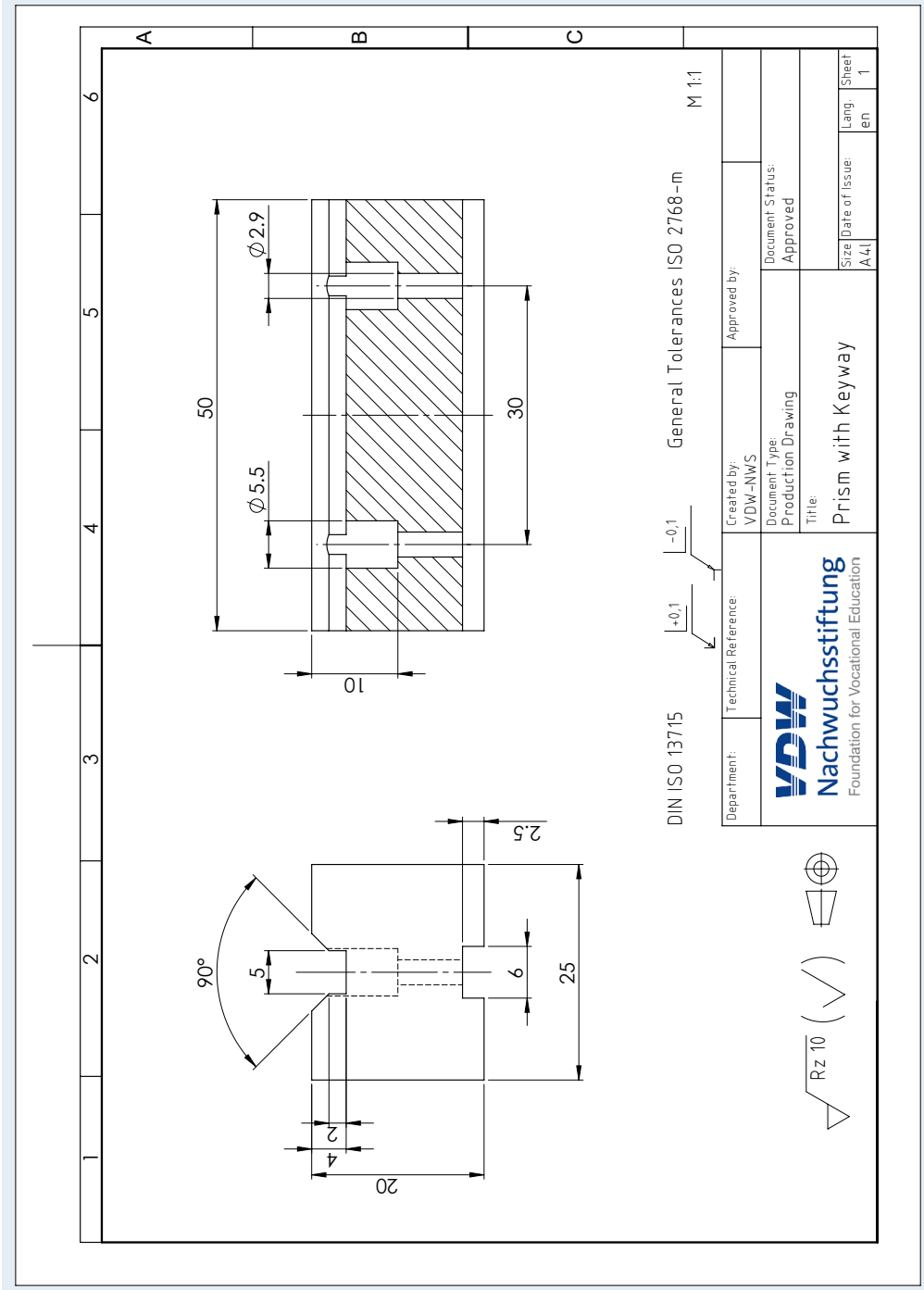
A
B
C
1
2
3
4
5
6
Ø2.9
Ø5.5
50
30
10
90°
5
6
25
2.5
20
4
2
M 1:1
General Tolerances ISO 2768-m
DIN ISO 13715
+0,1
-0,1
Rz 10
Department:
Technical Reference:
Created by:
VDW-NWS
Approved by:
Document Type:
Production Drawing
Document Status:
Approved
Title:
Prism with Keyway
Size
A4
Date of Issue:
Lang.
en
Sheet
1
VDW
Nachwuchsstiftung
Foundation for Vocational Education

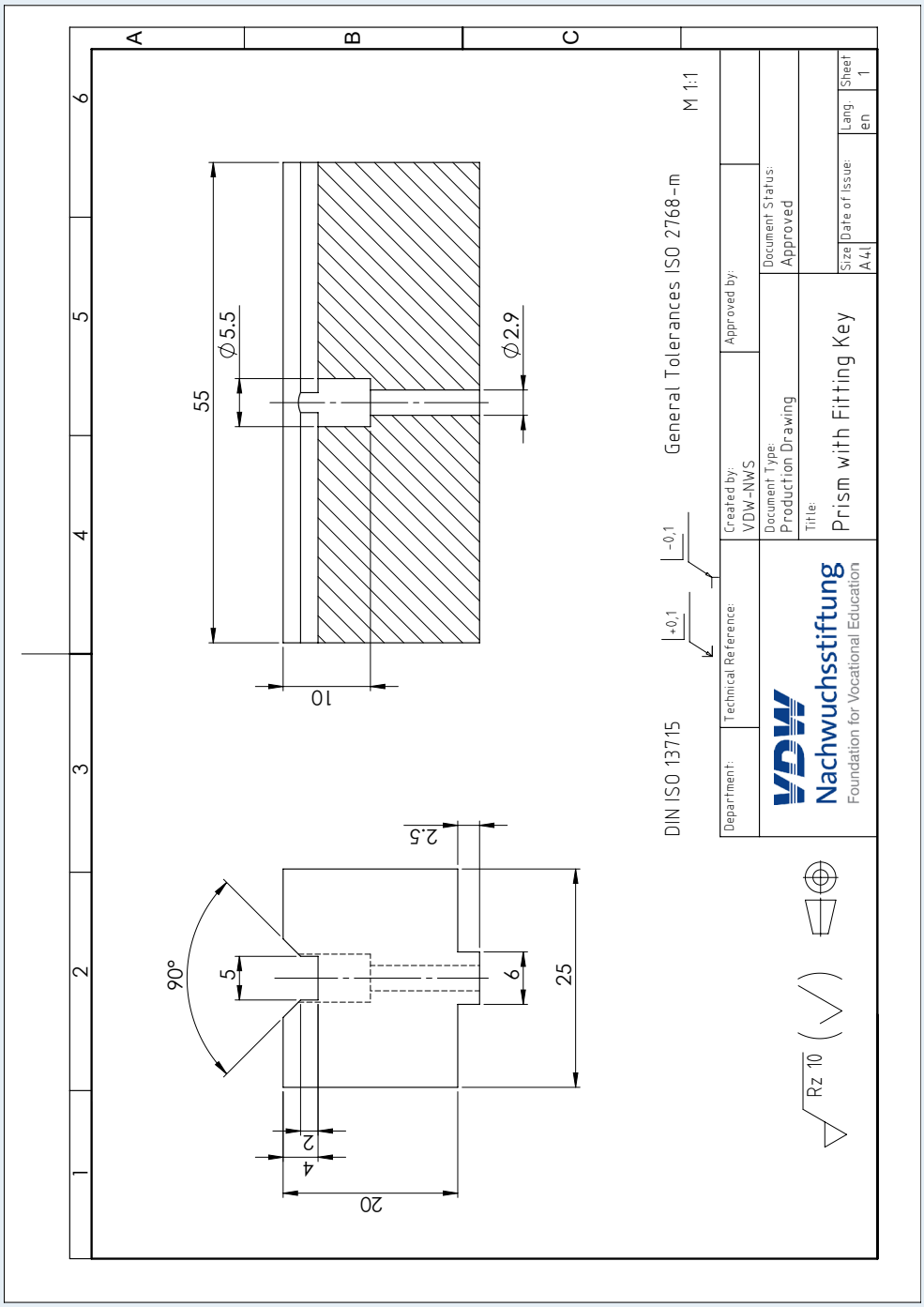
A
B
C
1
2
3
4
5
6
55
Ø5.5
Ø2.9
10
2.5
90°
5
6
25
20
4
2
Rz 10
DIN ISO 13715
+0,1
-0,1
General Tolerances ISO 2768-m
M 1:1
Department:
Technical Reference:
Created by:
VDW-NWS
Approved by:
Document Type:
Production Drawing
Document Status:
Approved
Title:
Prism with Fitting Key
Size
A4
Date of issue:
Lang.
en
Sheet
1
VDW
Nachwuchsstiftung
Foundation for Vocational Education

Notes

Notes

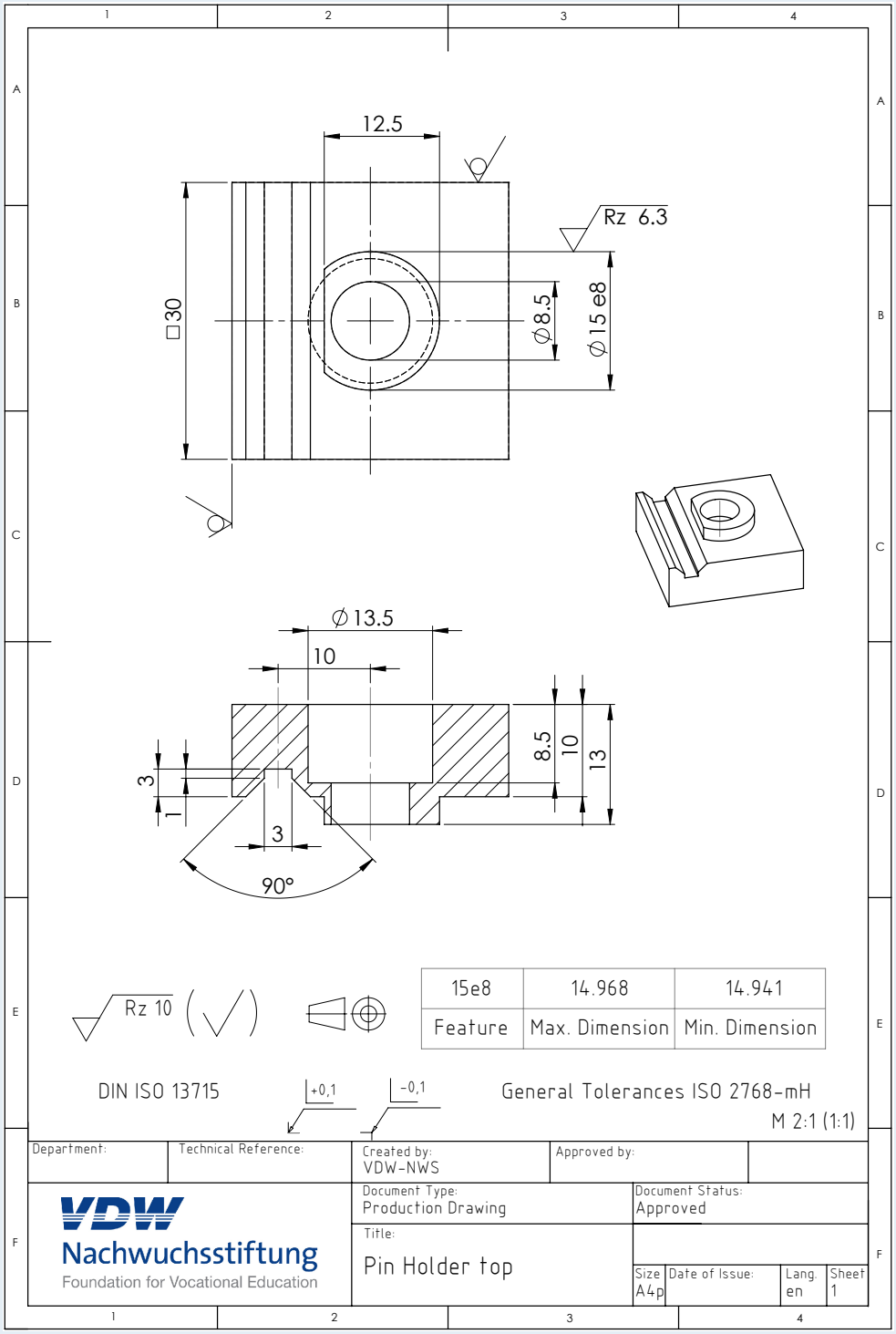
12.5
Rz 6.3
□30
⌀8.5
⌀15 e8
⌀13.5
10
8.5
10
13
3
1
3
90°
Rz 10
15e8
14.968
14.941
Feature
Max. Dimension
Min. Dimension
DIN ISO 13715
+0,1
-0,1
General Tolerances ISO 2768-mH
M 2:1 (1:1)
Department:
Technical Reference:
Created by:
VDW-NWS
Approved by:
VDW
Nachwuchsstiftung
Foundation for Vocational Education
Document Type:
Production Drawing
Document Status:
Approved
Title:
Pin Holder top
Size
A4p
Date of Issue:
Lang.
en
Sheet
1

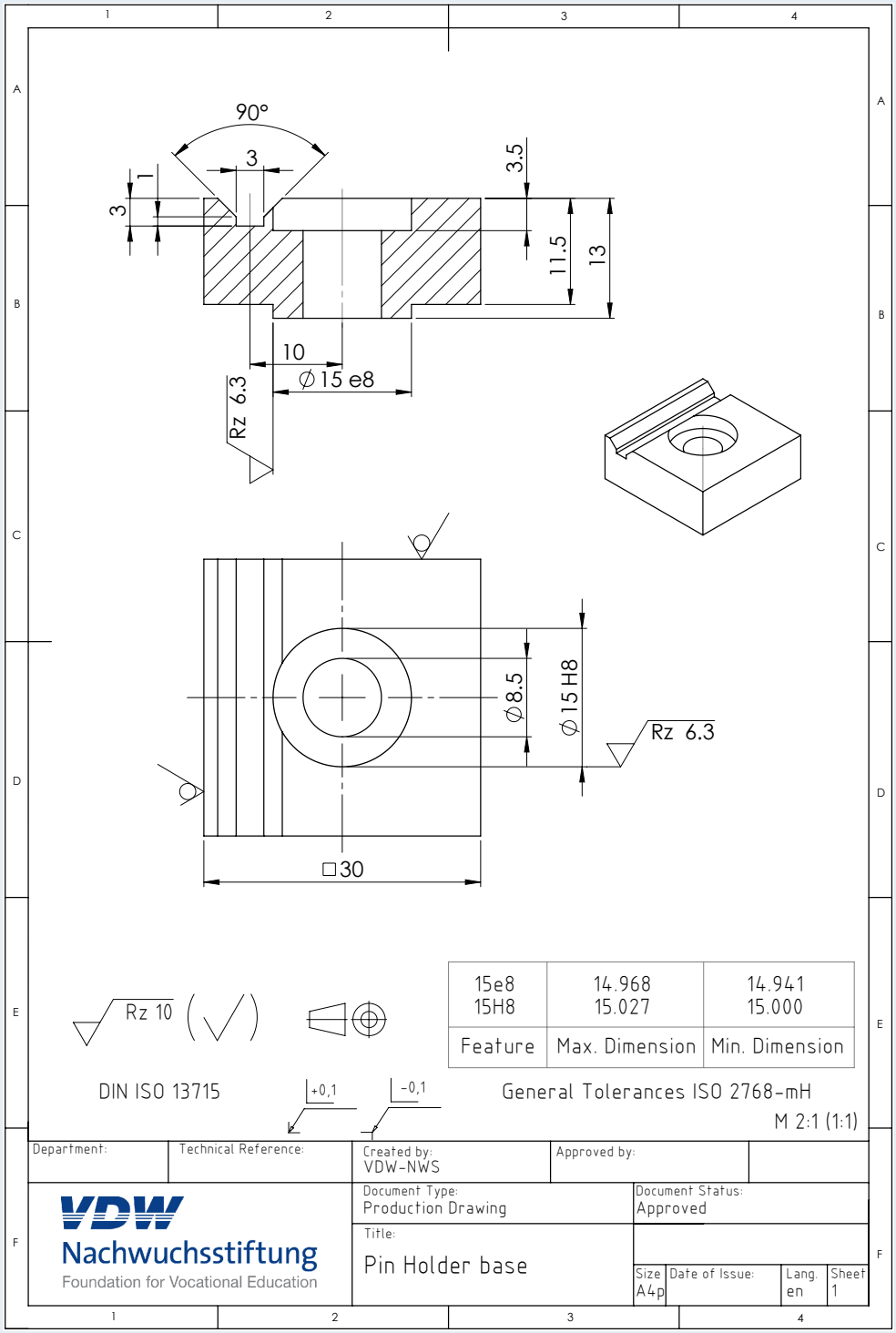

15e8 15H8	14.968 15.027	14.941 15.000
Feature	Max. Dimension	Min. Dimension

Notes

Notes

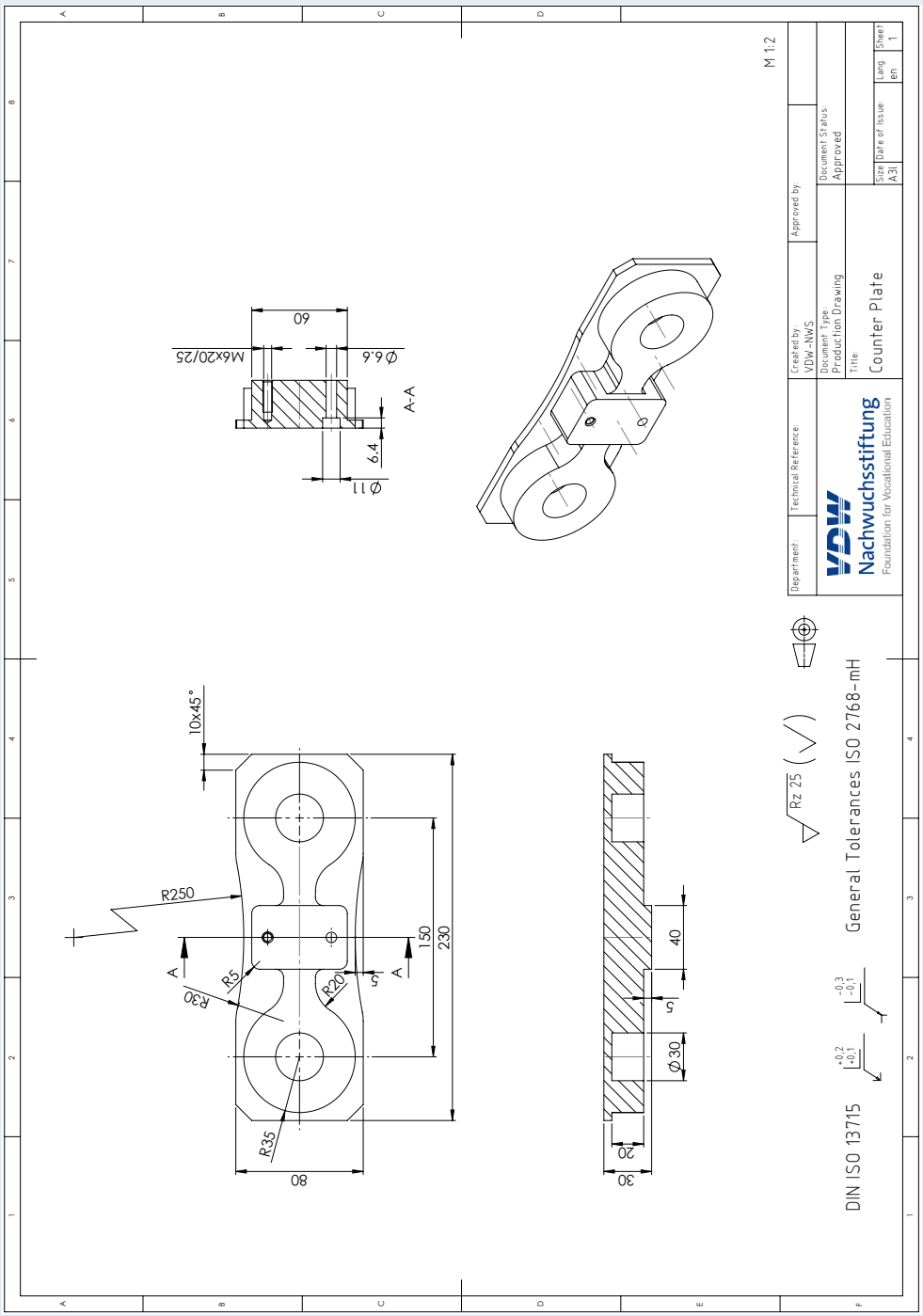
M 1:2
Department:
Technical Reference:
Created by:
VDW-NWS
Approved by:
Document Status:
Approved
Document Type:
Production Drawing
Title:
Counter Plate
Size
A3l
Date of Issue:
Lang
en
Sheet
1
VDW
Nachwuchsstiftung
Foundation for Vocational Education
Rz 25
General Tolerances ISO 2768-mH
DIN ISO 13715
+0,2
-0,1
-0,3
-0,1
10x45°
R250
R30
R5
R20
R35
A
A
5
150
230
80
40
5
Ø30
20
30
A-A
Ø11
6,4
Ø6,6
M6x20/25
60

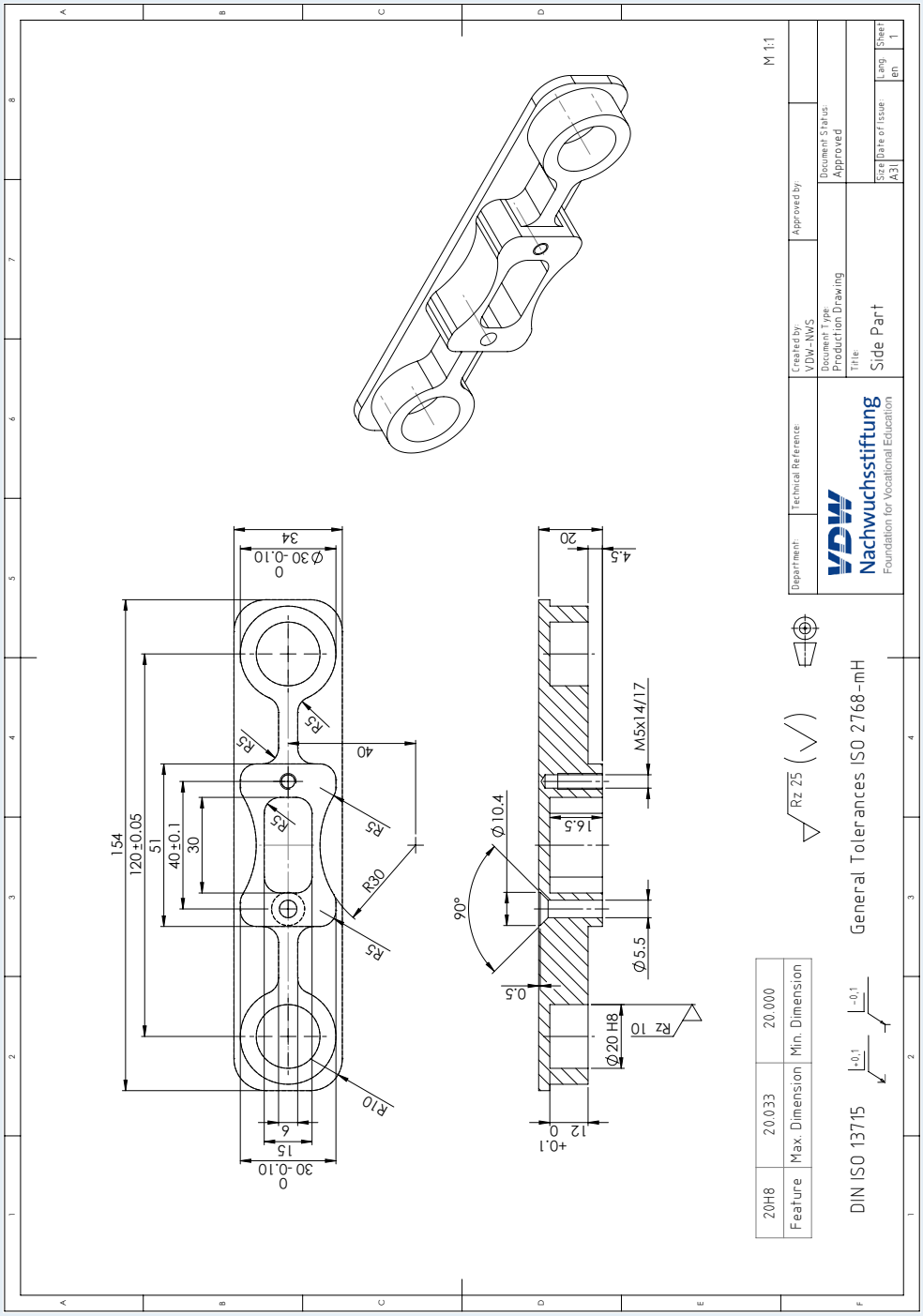
M 1:1
Department:
Technical Reference:
Created by: VDW-NWS
Approved by:
Document Status: Approved
Document Type: Production Drawing
Title: Side Part
Size A3
Date of issue
Lang en
Sheet 1
VDW Nachwuchsstiftung
Foundation for Vocational Education
Rz 25
General Tolerances ISO 2768-mH
DIN ISO 13715
+0.1
-0.1
20H8
Feature
20.033
Max. Dimension
20.000
Min. Dimension
1.54
120±0.05
51
40±0.1
30
34
Ø30 -0.10 0
30 -0.10 0
15
6
R5
R30
R10
40
Ø10.4
90°
0.5
Ø5.5
Ø20 H8
Rz 10
12 0 +0.1
16.5
M5x14/17
20
4.5

Notes

Notes

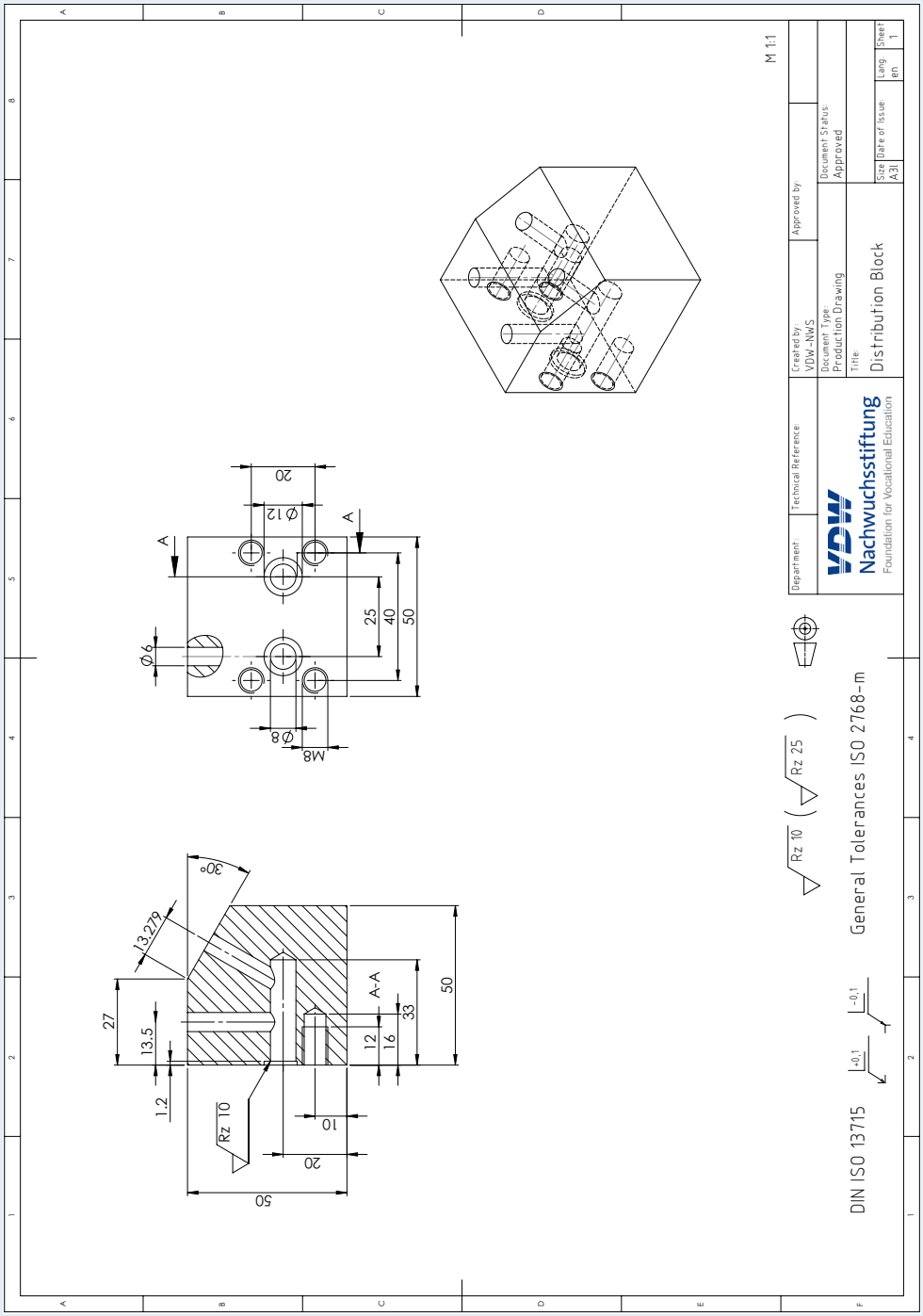
M 1:1
Department:
Technical Reference:
Created by:
VDW-NWS
Approved by:
Document Status:
Approved
Document Type:
Production Drawing
Title:
Distribution Block
Size
A3
Date of Issue:
Lang
en
Sheet
1
VDW
Nachwuchsstiftung
Foundation for Vocational Education
Rz 10
Rz 25
General Tolerances ISO 2768-m
DIN ISO 13715
+0,1
-0,1
A-A
30°
13,279
27
13,5
1,2
Rz 10
50
20
10
12
16
33
50
A
A
Ø 12
20
Ø 6
25
40
50
Ø 8
M8

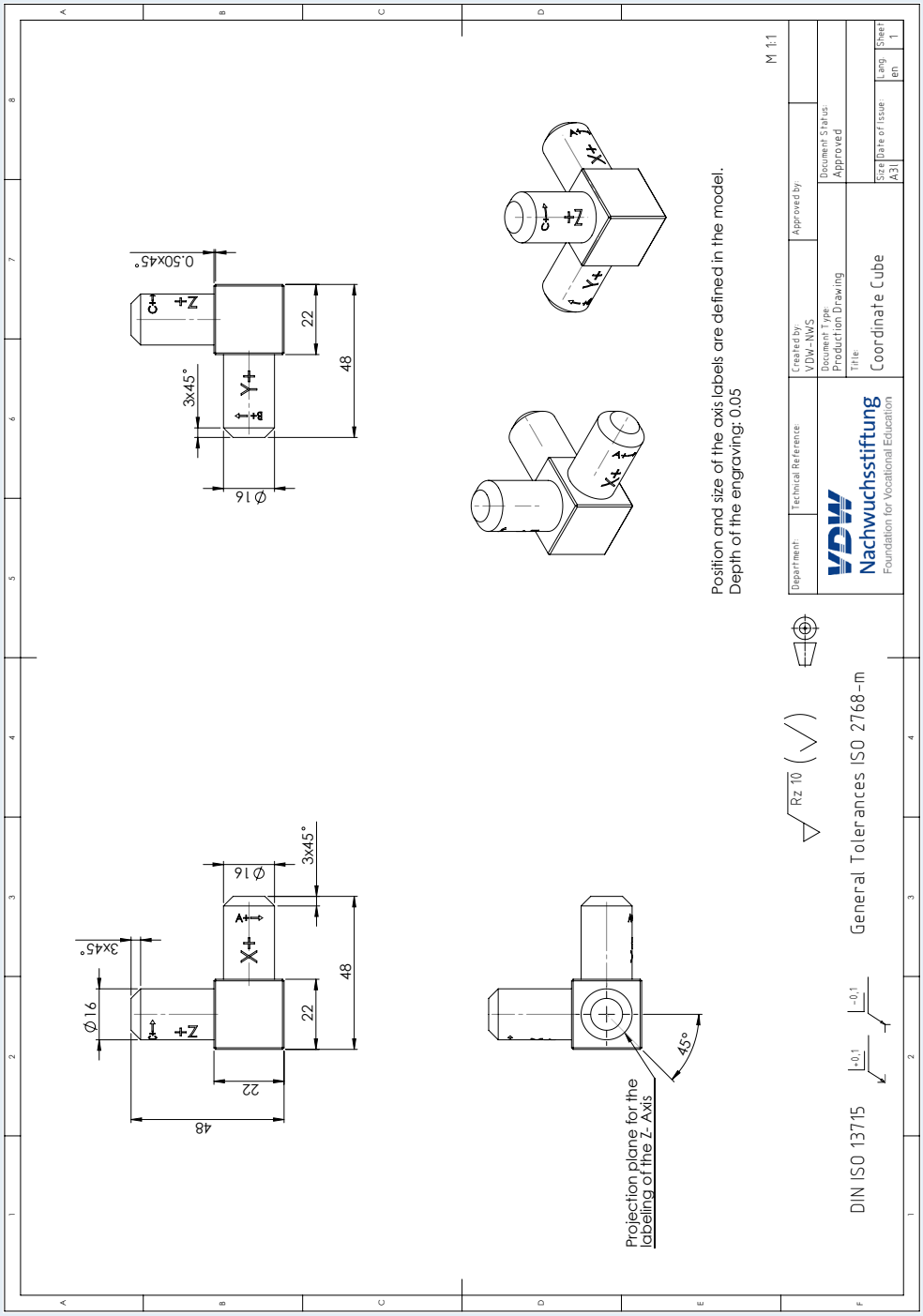
0.50x45°
Z+
C+
22
48
3x45°
Y+
B+
Ø16
Z+
C+
Y+
B+
X+
A+
Y+
A+
Ø16
3x45°
48
22
Ø16
3x45°
Z+
C+
22
48
Projection plane for the labeling of the Z- Axis
45°
Position and size of the axis labels are defined in the model.
Depth of the engraving: 0.05
M 1:1
Rz 10
General Tolerances ISO 2768-m
DIN ISO 13715
+0.1
-0.1
Department:
Technical Reference:
Created by: VDW-NWS
Approved by:
Document Status: Approved
Document Type: Production Drawing
Title: Coordinate Cube
Size A3
Date of Issue
Lang en
Sheet 1
VDW Nachwuchsstiftung
Foundation for Vocational Education

Notes

VDW

Nachwuchsstiftung

Foundation for Vocational Education