SolidCAM 2014

The unique, revolutionary Milling technology

iMachining®

patent by SolidCAM

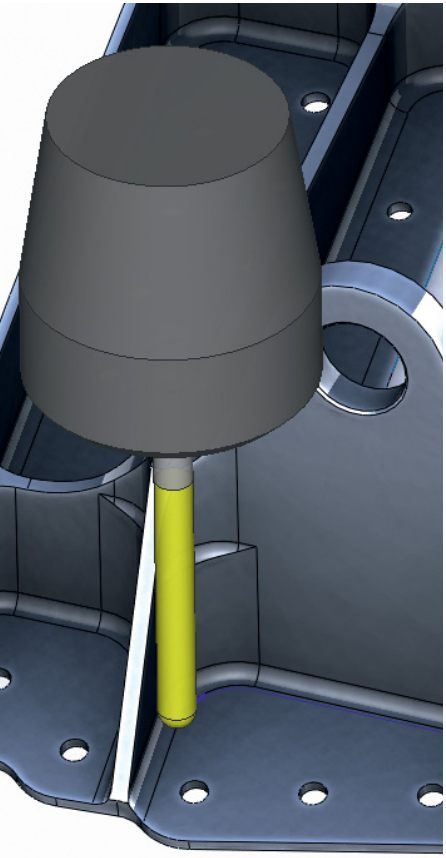

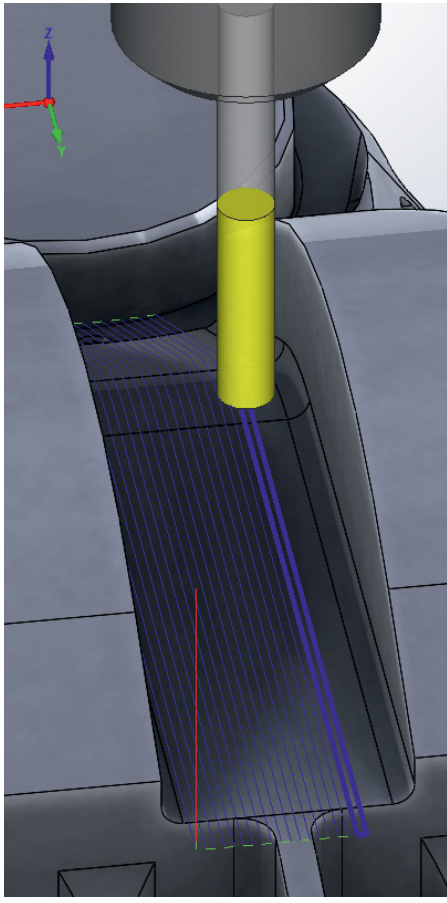

SolidCAM 2014 User Guide:
HSS

iMachining 2D & 3D | 2.5D Milling | **HSS** | HSR/HSM | Indexial Multi-Sided | Simultaneous 5-Axis | Turning & Mill-Turn | Solid Probe

SOLIDWORKS Certified Gold Product

SolidCAM + SolidWorks

The complete integrated Manufacturing Solution

SolidCAM

iMachining – The Revolution in CAM!

SolidCAM

iMachining – The Revolution in CAM!

SolidCAM 2014

HSS Machining User Guide

©1995-2014 SolidCAM

All Rights Reserved.

Contents

1. Introduction 1

1.1 Adding an HSS Operation 6
1.2 HSS operation dialog box 7
1.3 The stages of the HSS operation parameters definition 9

2. CoordSys 11

3. Geometry 13

3.1 Geometry 14
3.1.1 Geometry for the Parallel cuts strategies 15
3.1.2 Geometry for the Parallel to curves strategy 17
3.1.3 Geometry for the Parallel to surface strategy 18
3.1.4 Geometry for the Perpendicular to curve strategy 21
3.1.5 Geometry for the Morph between two boundary curves strategy 22
3.1.6 Geometry for the Morph between two adjacent surfaces strategy 23
3.1.7 Geometry for the Projection strategies 25
3.2 Area 28
3.2.1 Full, avoid cuts at exact edges 28
3.2.2 Full, start and end at exact surface edges 29
3.2.3 Limit cuts by one or two points 31
3.2.4 Determined by number of cuts 31
3.2.5 Use 2D Boundary 33

4. Tool 35

4.1 Tool definition 36
4.1.1 Spin definition 37
4.1.2 Feed definition 37
4.1.3 Offsets 38
4.1.4 Cutting conditions 38
4.1.5 Feed zone control 39
4.1.6 Feed rate optimization 39
4.1.7 Rapid motion in G1 mode 40

5. Levels 41

5.1 Regular 42

5.1.1 Clearance area 42

5.1.2 Machining levels 45

5.2 Advanced 47

5.2.1 Arc fit 47

5.2.2 Angle step for rapid moves 48

5.2.3 Angle step for feed moves 49

6. Tool path parameters 51

6.1 Surface quality 52

6.1.1 Cut tolerance 52

6.1.2 Step over 53

6.1.3 Advanced options for surface quality 54

6.2 Sorting 56

6.2.1 Cutting method 56

6.2.2 Direction of machining 59

6.2.3 Cut order 60

6.2.4 Machine by 61

6.2.5 Enforce closed contours 61

6.2.6 Flip step over 62

6.2.7 Start point 62

6.3 Modify 65

6.3.1 Surface edge merge distance 65

6.3.2 Apply outer sharp corners 66

6.3.3 3D Tool compensation 67

6.3.4 Round corners 67

6.3.5 Angle range 68

6.3.6 Extend/Trim 69

7. Tool Control 73

7.1 Axial Shift 74

7.2 Tool contact point 75

8. Link 79

8.1 Approach/Retract 80
8.1.1 First entry 80
8.1.2 Last exit 83
8.1.3 Home position 85
8.2 Links 86
8.2.1 Gaps along cut 86
8.2.2 Links between slices 89
8.3 Default Lead-In/Out 93
8.3.1 Type 93
8.3.2 Approach/retreat parameters (Use the...) 96
8.3.3 Height 97
8.3.4 Feed rate 97
8.3.5 Same as Lead-In 98

9. Gouge Check 99

9.1 Gouge checking 100
9.1.1 Tool 100
9.1.2 Geometry 101
9.1.3 Strategy 102
9.2 Clearance data 110
9.2.1 Clearance 110
9.2.2 Report remaining collisions 112
9.2.3 Check gouge between positions 112
9.2.4 Extend tool to infinity 113
9.2.5 Check link motions for collision 113

10. Roughing and More 115

10.1 Multi-passes 117
10.2 Depth cuts 120
10.3 Rotate and Translate 123
10.4 Stock definition 126
10.5 Plunging 129
10.6 Morph pocket 130

10.7 Sorting 133
10.7.1 Reverse order of passes/tool path 133
10.7.2 Connect slices by shortest distance 134
10.8 Links between passes 136

11. Machine control 139

11.1 Point interpolation 141
11.2 Machine limits 141
11.3 5th Axis 142

12. Misc. parameters 143

12.1 Message 144
12.2 Extra parameters 144
12.3 Tool center based calculation 145

13. Exercises 147

Exercise #1: Parallel cuts strategy 148
Exercise #2: Parallel to curve strategy 150
Exercise #3: Parallel to surface strategy 151
Exercise #4: Perpendicular to curve strategy 152
Exercise #5: Morph between two boundary curves strategy 153
Exercise #6: Morph between two adjacent surfaces strategy 154
Exercise #7: Projection strategy 155
Exercise #8: General HSS machining 156
Exercise #9: General HSS machining 161
Exercise #10: General HSS machining 164
Exercise #11: General HSS machining 168

Document number: SCHSSUG1400SP3

Introduction 1

Welcome to the SolidCAM HSS Machining module!

SolidCAM HSS is a High Speed Surface machining module for smooth and powerful machining of localized surface areas in the part, including undercuts. It provides easy selection of the surfaces to be machined, with no need to define the boundaries. It supports both standard and shaped tools.

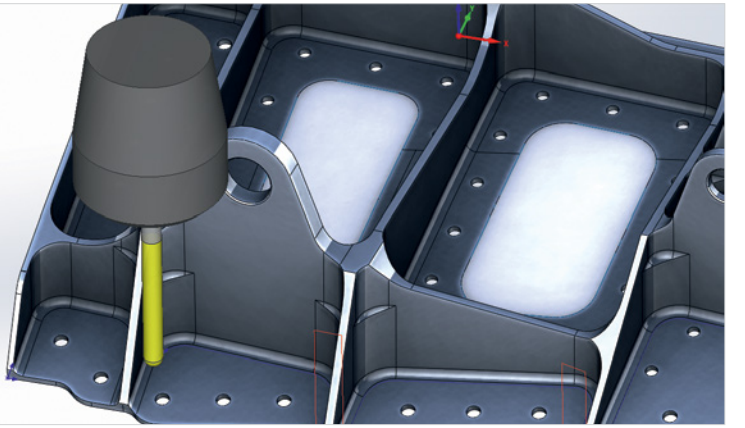

Powerful Surface Machining Strategies for Smooth, Gouge-Free and Optimal Tool Paths

The SolidCAM HSS module provides numerous surface machining strategies that produce efficient, smooth, gouge-free and optimal tool path to finish the selected surfaces.

HSS provides special tool path linking options, generating smooth and tangential lead-ins and lead-outs. The linking moves between the tool paths can be controlled by the user to avoid holes and slots, without the need to modify the model's surface. Retracts can be performed to any major plane.

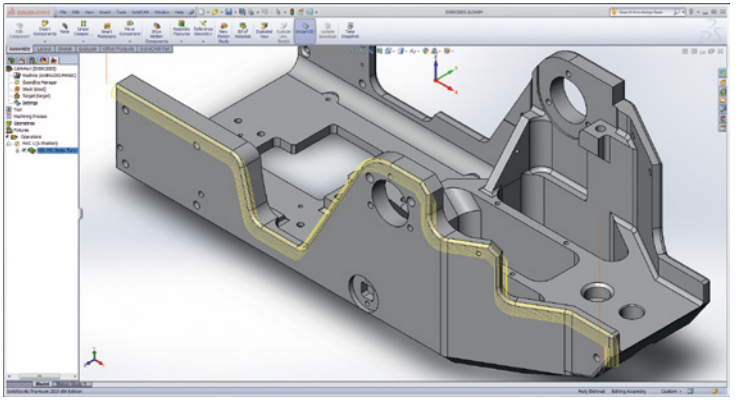

Total Tool Control to Machine Only the Areas You Choose

HSS is the CAM module that takes your 2.5D machining way beyond profiles, pockets and faces, providing a 3D machining capability by driving along specific surfaces on prismatic and 3D parts.

The HSS tool path is focused on single or multiple surfaces and excels in creating a flowing tool path on a group of surfaces that make up a complex 3D shape, e.g. fillets.

Experience total tool control to machine only areas you choose, without the need of constraint boundaries or construction geometry.

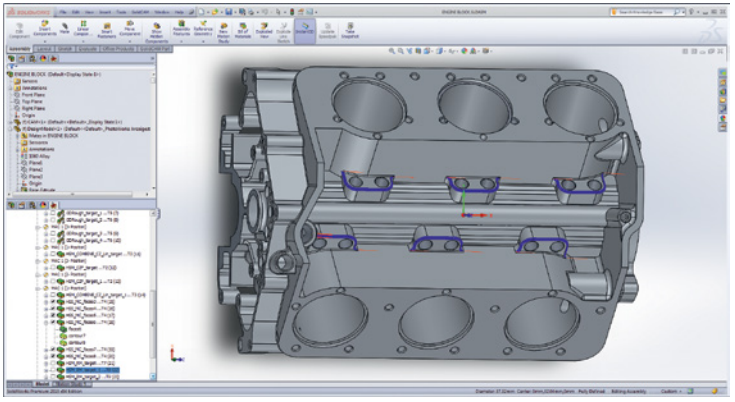

Advanced Gouge Control for Holder, Arbor and Tool

Complete gouge control is available for Holder, Arbor and Tool. Adjoining check surfaces that are to be avoided can be selected. Several retract strategies are available, under user control.

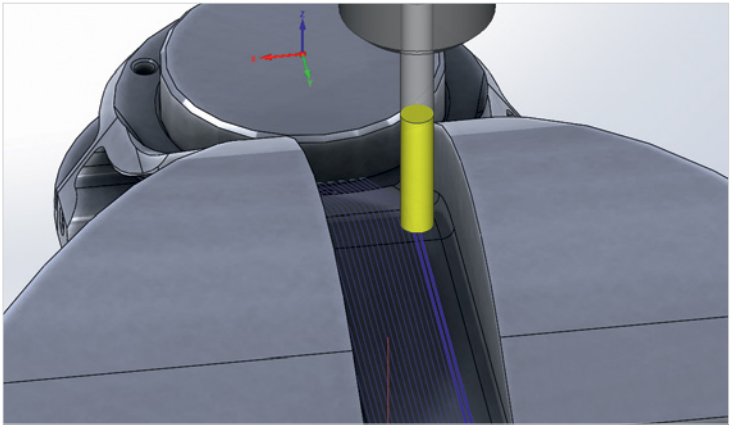

Advanced Linking

Total freedom to control tool entry and tool exit motion, to remove the need for surface modifications. Tool paths can be extended or trimmed, gaps and holes can be jumped, and you can choose from multiple lead-in/lead-out options.

Handling Undercut in HSS

Use Tapered, Lollipop, or T-Slot tools for undercuts or difficult to cut geometry.

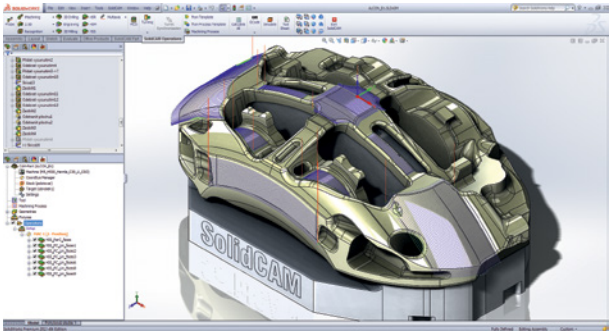

Important Module for Every Machine Shop

The advantages of the SolidCAM HSS module translate to significantly increased surface quality. The SolidCAM HSS module is an important add-on for every machine shop for the machining of all types of parts.

About this book

This book is intended for experienced SolidCAM users. If you are not familiar with the software, start with the lessons in the Getting Started Manual and then contact your reseller for information about SolidCAM training classes.

About the Exercises

The CAM-Parts used for this book are attached in a ZIP archive. Extract the content of the Exercises archive into your hard drive. The SolidWorks files used for exercises were prepared with SolidWorks 2014.

The contents of this book and exercises can be downloaded from the SolidCAM web site **http://www.solidcam.com**.

1.1 Adding an HSS Operation

To add an **HSS Operation** to the CAM-Part, right-click the **Operations** header in **SolidCAM Manager** and choose the **HSS** command from the **Add Milling Operation** submenu.

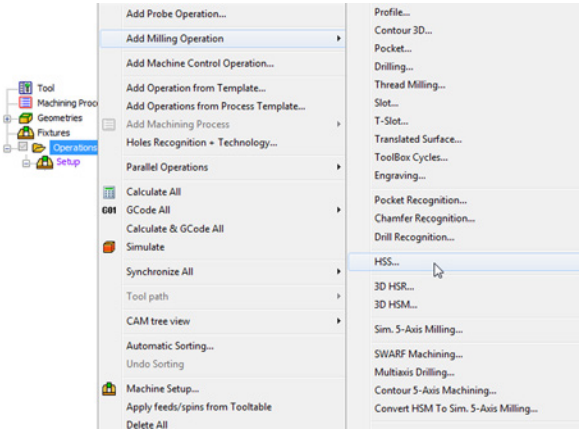

You can also click the **HSS** icon displayed on the **SolidCAM Operations** ribbon of **Command Manager**.

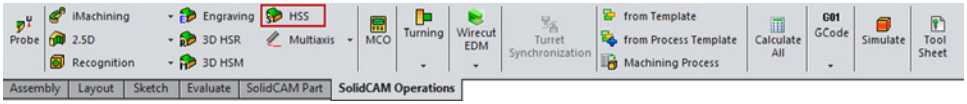

The **HSS Parallel cuts: Linear operation** dialog box is displayed.

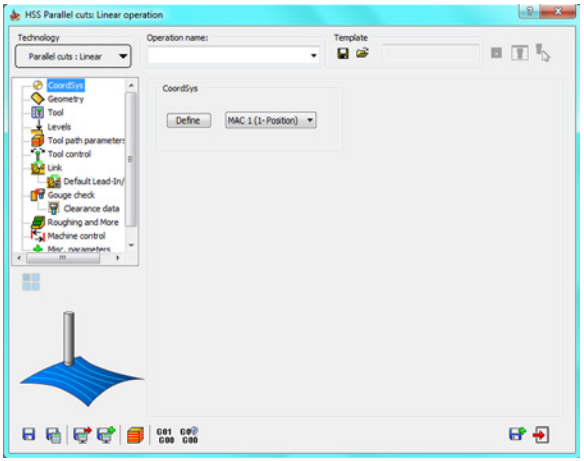

1.2 HSS operation dialog box

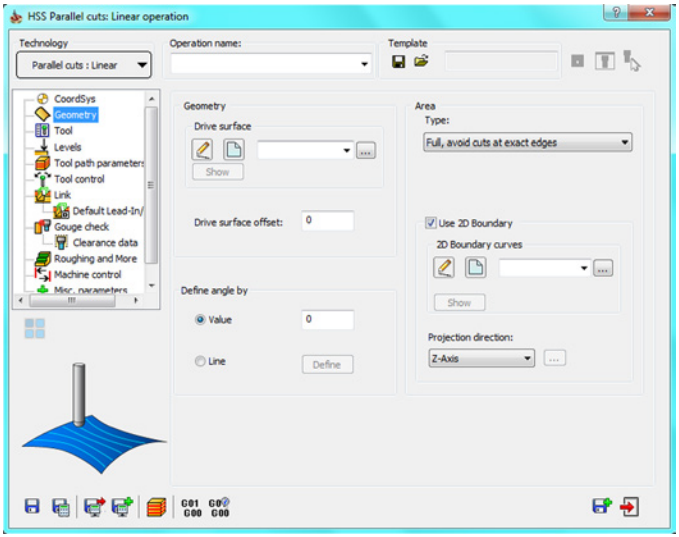

The **High Speed Surface machining operation** dialog box enables you to define the parameters of the HSS machining.

Technology

This section enables you to define the type of the operation. SolidCAM provides you with the following types of the HSS operation:

- Parallel cuts (Linear, Constant Z, Hatch)
- Parallel to Curve(s)
- Parallel to Surface
- Perpendicular to Curve
- Morph between two boundary curves
- Morph between two adjacent surfaces
- Projection (User defined, Radial, Spiral, Offset)

Parameter pages

The parameters of the HSS operation are divided into a number of subgroups. The subgroups are displayed in a tree format on the left side of the **HSS machining operation** dialog box. When you click a subgroup name in the tree, the parameters of the selected subgroup appear on the right side of the dialog box.

- **CoordSys**

  Define the CoordSys Position for the HSS operation.

- **Geometry**

  Choose geometry for machining and define the related parameters.

- **Tool**

  Choose a tool for the operation and define the related parameters such as feed and spin.

- **Levels**

  Define the Clearance area and the machining levels.

- **Tool path parameters**

  Define the machining parameters.

- **Tool control**

  Define the tool control parameters.

- **Link**

  The **Link** and **Default Lead-In/Out** pages enable you to define how the HSS cutting passes are linked to the complete tool path.

- **Gouge check**

  The **Gouge check** and **Clearance data** pages enable you to avoid the tool gouging of any selected drive and check surfaces.

- **Roughing and More**

  Define the parameters of the HSS roughing.

- **Machine control**

  Define the parameters related to the kinematics and special characteristics of your CNC-machine.

- **Misc. parameters**

  Define a number of miscellaneous parameters and options related to the tool path calculation.

1.3 The stages of the HSS operation parameters definition

The operation definition is divided into the following stages:

1. **CoordSys**, **Geometry**, **Tool Path Parameters** and **Link –** generation of the tool path for the selected faces. Gouge checking is not performed at this stage.

2. **Gouge check –** avoiding tool and holder collisions.

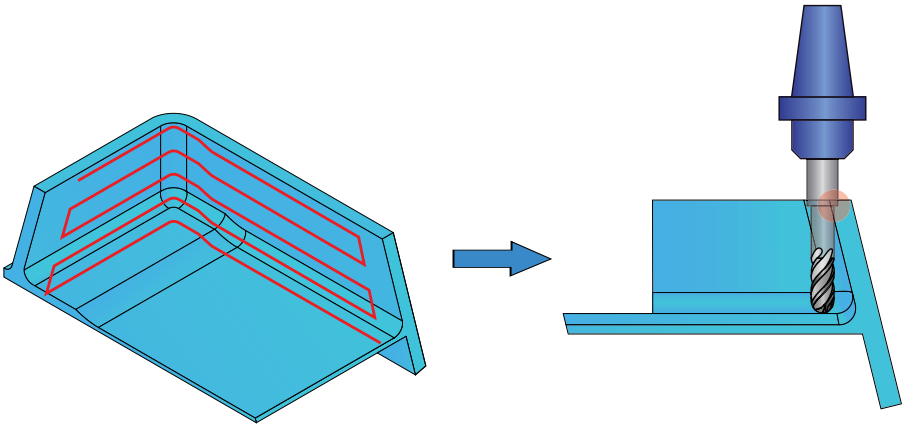

Tool path generation

Gouge check

CoordSys 2

CoordSys page

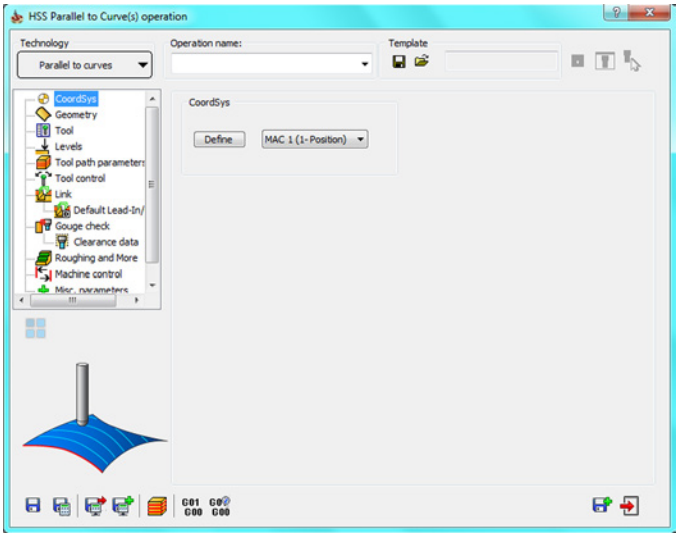

On this page, you define the Coordinate System appropriate for the operation. Choose an existing Coordinate System from the list or click the **Define** button to define a new one. The **CoordSys Manager** dialog box is displayed. This dialog box enables you to define a new Coordinate System directly on the solid model.

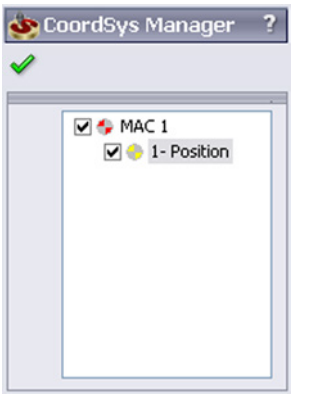

When the Coordinate System is chosen for the operation, the model is rotated to the selected CoordSys orientation.

For more information on the Coordinate System definition, refer to the **SolidCAM Milling User Guide**.

The CoordSys definition must be the first step in the operation definition process.

Geometry

3

The **Geometry** page enables you to define the geometry and its related parameters for machining.

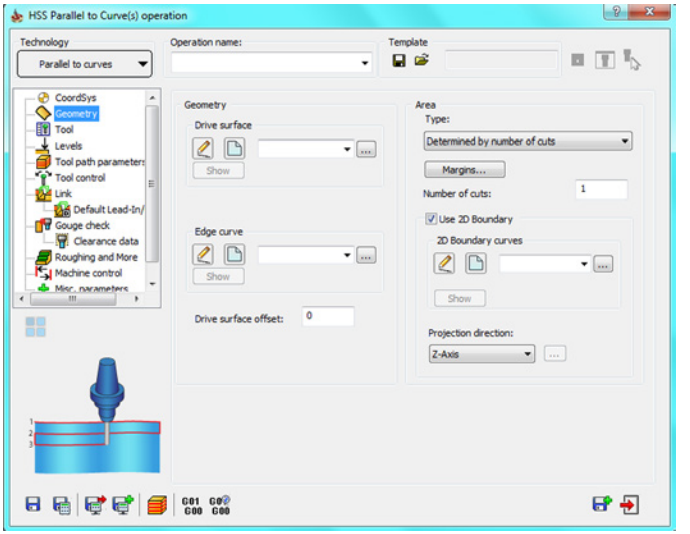

3.1 Geometry

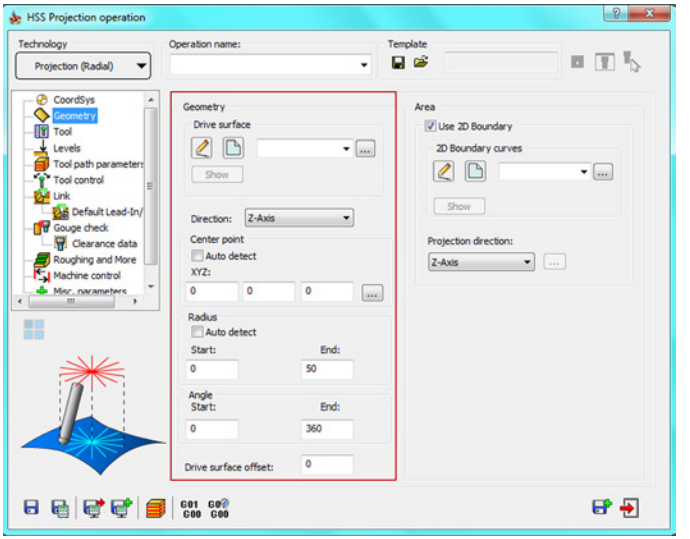

This section enables you to define the geometry for the operation. The geometry consists of various elements (curves and surfaces) that must be defined depending on the machining strategy chosen from the **Technology** list.

3.1.1 Geometry for the Parallel cuts strategies

The **Parallel cuts** strategies create tool path cuts that are parallel to each other. The cuts can be performed in a **Linear**, **Constant Z** or **Hatch** manner.

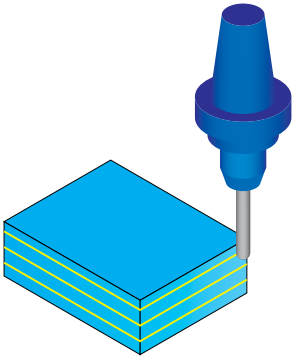

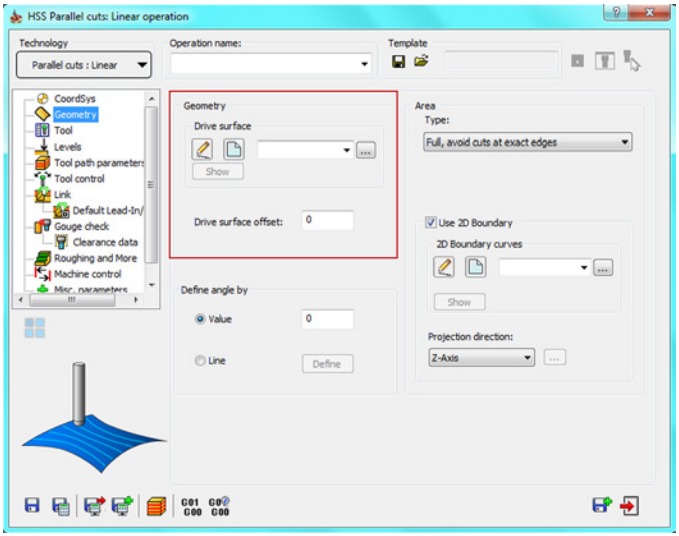

The following geometries must be defined for the **Parallel cuts** strategies:

- **Drive surface**

  The **Drive surface** section enables you to define the surface to be machined in the operation. Choose the appropriate geometry from the list or define a new one by clicking the **New** icon ( ). The **Select Faces** dialog box is displayed. This dialog box enables you to select one or several faces of the SolidWorks model. Click on the appropriate model faces. The selected faces are highlighted.

  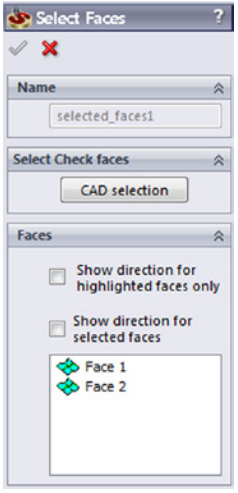

  To remove selection, click on the selected face again or right-click the face name in the list (the face is highlighted) and choose the **Unselect** option from the menu.

  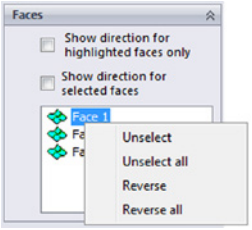

When transferring model files from one CAD system to another, the direction of some of the surface normals might be reversed. For this reason, SolidCAM provides you with the capability to display and edit the normals of model surfaces during the geometry selection.

The **Show direction for highlighted faces only** check box enables you to display the surface normals for the specific highlighted faces in the list.

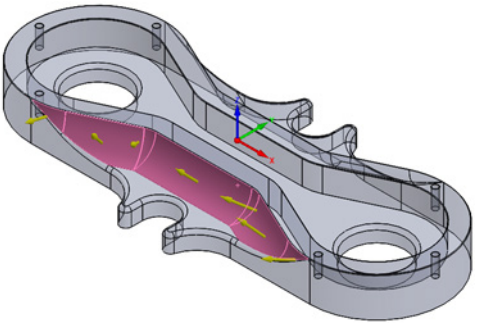

The **Show direction for selected faces** check box enables you to display the normals direction for all the faces in the list.

SolidCAM enables you to machine surfaces from the positive direction of the surface normal. Sometimes surfaces are not oriented correctly and you have to reverse their normal vectors. The **Reverse/Reverse All** command enables you to reverse the direction of the surface normal vectors.

Drive surface offset

The **Drive surface offset** parameter enables you to define a machining allowance for the drive surface. The machining is performed at the specified distance from the drive surface.

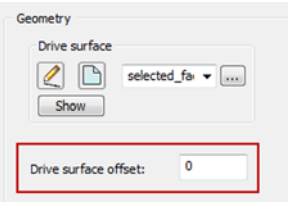

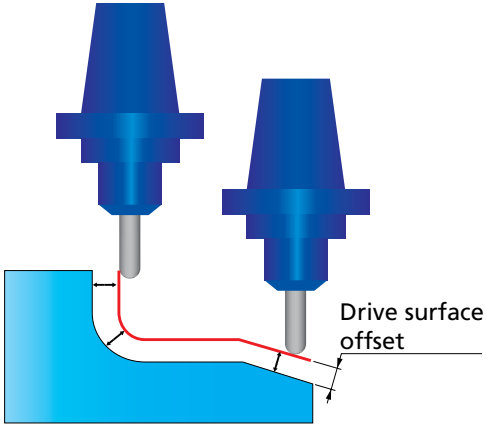

The offset is three-dimensional and expands the faces in every direction.

- **Define angle by**

The **Define angle by** section enables you to define the angle of linear and hatch machining. The angle can be defined by entering its value in the edit box or by picking a line on the model. The angles entered are relative to the XY plane.

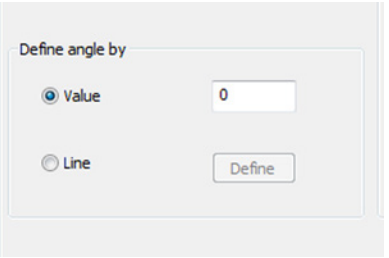

This option is available only in the **Linear** and **Hatch** modes of the **Parallel cuts** strategy.

3.1.2 Geometry for the Parallel to curves strategy

The machining is performed along a lead curve. The generated cuts are parallel to each other. The distance between each two adjacent passes is determined by the **Step over** parameter (see topic **6.1.2**).

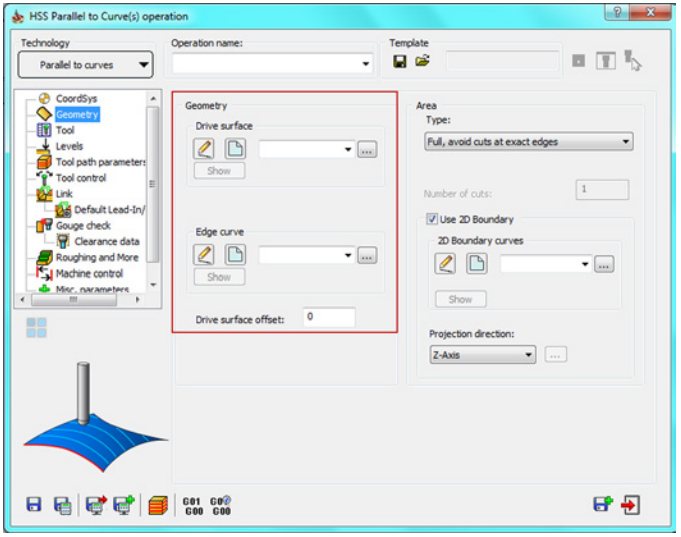

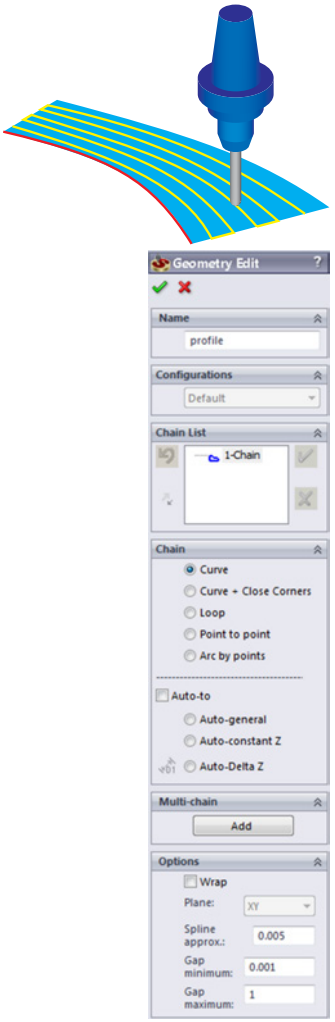

The following geometries must be defined for the **Parallel to curves** strategy:

- **Drive surface**

  The **Drive surface** section enables you to define the surfaces to be machined in the operation (see topic **3.1.1**).

- **Edge curve**

  The **Edge curve** section enables you to define the lead curve parallel to which the tool path passes are performed. Choose the appropriate geometry from the list or define a new one by clicking the **New** icon ( ) The **Geometry Edit** dialog box is displayed. This dialog box enables you to define wireframe geometries by picking edges and vertices on the SolidWorks model.

  You can also use multiple curves for multiple surfaces. Each curve is applied only for the nearest surface.

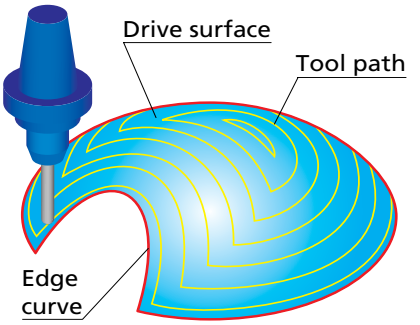

The lead curve must be located exactly on the surface edge; otherwise, a wrong tool path can be generated.

3.1.3 Geometry for the Parallel to surface strategy

This strategy enables you to generate the tool path on the drive surface parallel to the specified check surface.

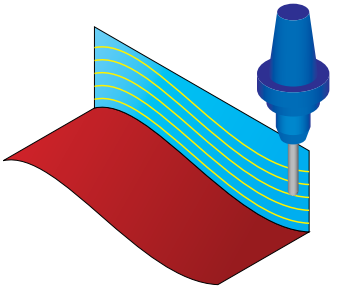

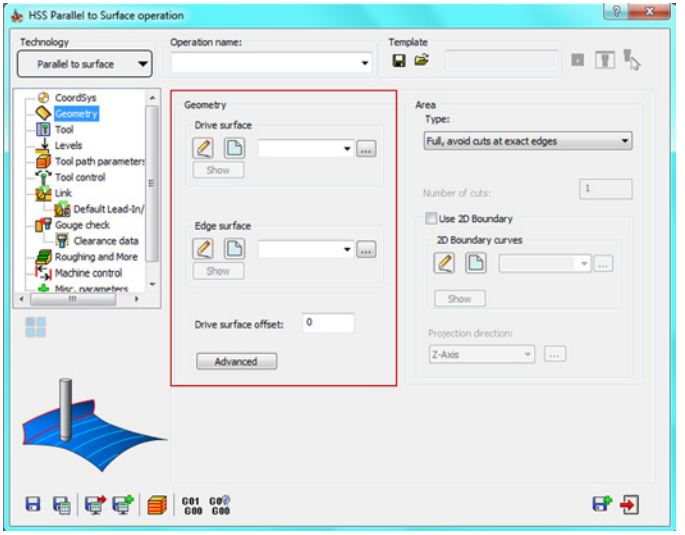

The following geometries must be defined for the **Parallel to surface** strategy:

- **Drive surface**

  The **Drive surface** section enables you to define the surface to be machined in the operation (see topic **3.1.1**).

- **Edge surface**

  The **Edge surface** section enables you to define the check surfaces geometry for the tool path generation.

The drive and check surfaces have to be adjacent, i.e. they must have a common edge.

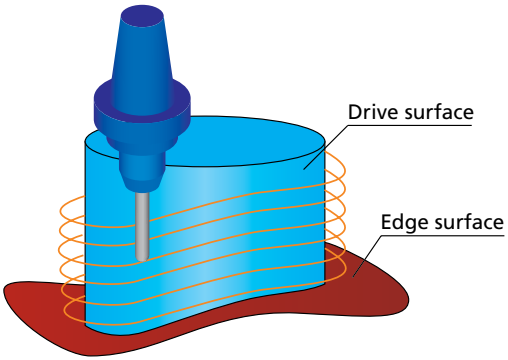

Advanced options

SolidCAM enables you to define a number of advanced options for the **Parallel to surface** strategy. Click the **Advanced** button to display the **Advanced Options of Surface Paths Pattern** dialog box.

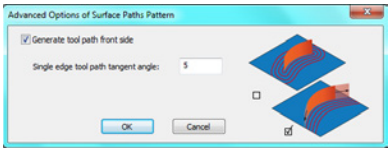

The **Generate tool path front side** option enables SolidCAM to take into account the normals of the defined check surface.

When this check box is not selected, the tool path is generated on the drive surface only - on all sides of the check surface.

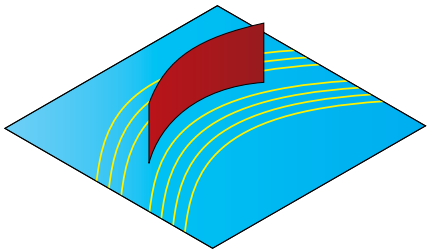

When this check box is selected, SolidCAM generates the tool path taking into account the direction of the check surface normals. The resulting tool path is created only at the front side of the check surface.

SolidCAM automatically extends the passes tangentially at the drive surface edges. Using **Single edge tool path tangent angle** parameter changes the extension direction. The option affects only the first pass adjacent to the check surface; all other passes are extended tangentially.

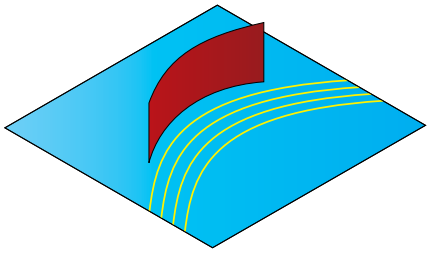

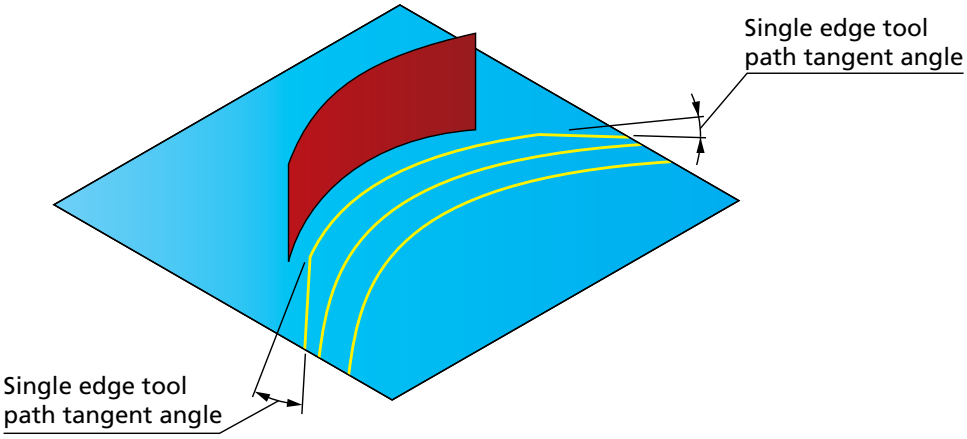

3.1.4 Geometry for the Perpendicular to curve strategy

This strategy enables you to generate the tool path orthogonal to the defined **Lead curve**.

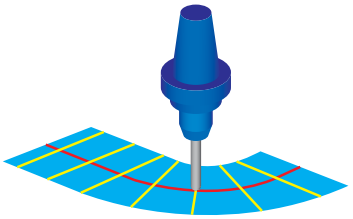

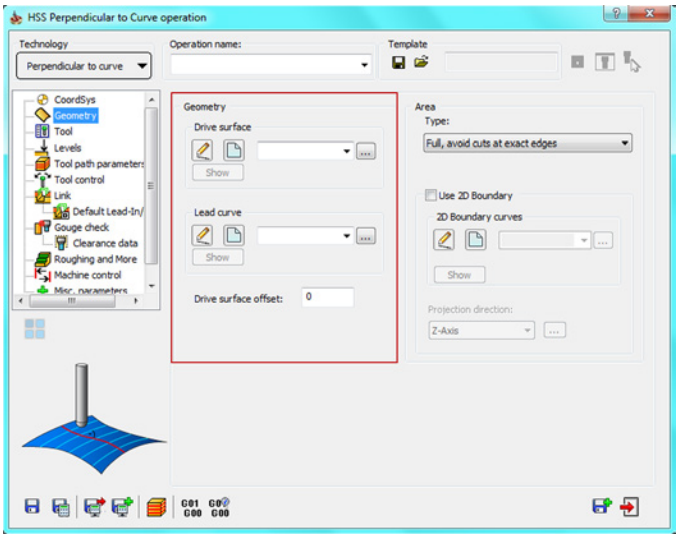

The following geometries must be defined for the **Perpendicular to curve** strategy:

- **Drive surface**

  The **Drive surface** section enables you to define the surface to be machined in the operation (see topic **3.1.1**).

- **Lead curve**

  The lead curve geometry does not have to be located on the surface. During the tool path calculation, SolidCAM generates in each point of the lead curve virtual points on the curve. The distance between these points is determined by the **Step over value** (see topic **6.1.2**).

  SolidCAM projects the virtual points onto the drive surface; the direction of the projection is the normal vector of the curve at the virtual point. Where the normal vector intersects with the surface, a virtual surface point is generated. The passes are generated through these points, normal to the lead curve.

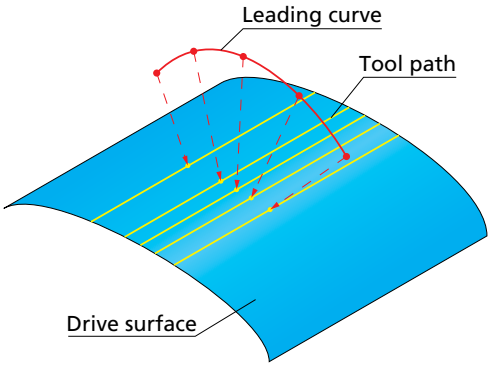

If the cuts cross each other at the surface edge caused by an inappropriate lead curve, you will not obtain an acceptable result.

The lead curve must be located exactly on or above the drive surface. If the curve is not located above the surface, no tool path is generated. When only a part of the lead curve is located above the surface, a tool path is generated only where the normal vector of the lead curve intersects with the drive surface.

Note that when the selected curve is not a straight line, the cuts are not parallel to each other.

3.1.5 Geometry for the Morph between two boundary curves strategy

This option creates a morphed tool path between two leading curves. The generated tool path is evenly spread over the drive surface.

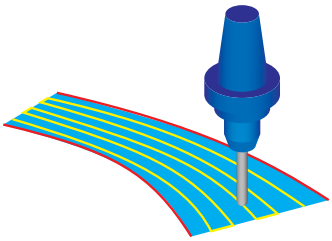

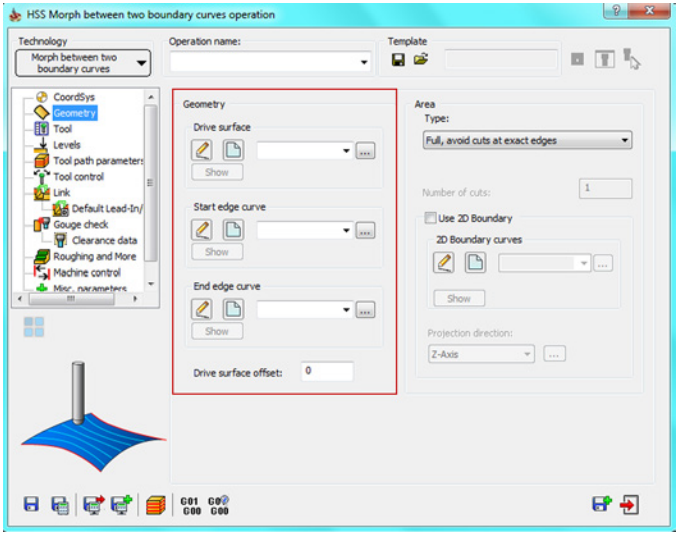

The following geometries must be defined for the **Morph between two boundary curves** strategy:

- **Drive surface**

  The **Drive surface** section enables you to define the surface to be machined in the operation (see topic **3.1.1**).

- **Curves**

  The **Start edge curve** and **End edge curve** sections enable you to define the leading curves for the morphing using the **Geometry Edit** dialog box (see topic **3.1.2**).

It is recommended to choose the drive surface edges as the lead curves geometry to get better morphing of the tool path.

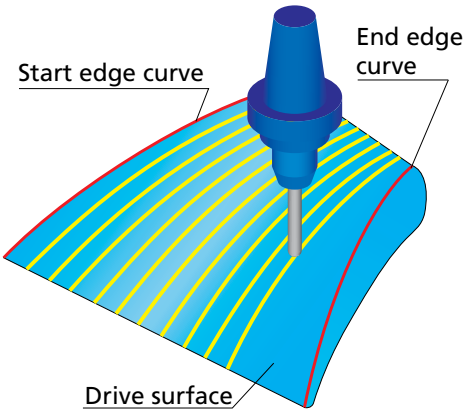

3.1.6 Geometry for the Morph between two adjacent surfaces strategy

This strategy enables you to generate the morphed tool path on a drive surface enclosed by two check surfaces. The tool path is generated between the check surfaces evenly spaced over the drive surface.

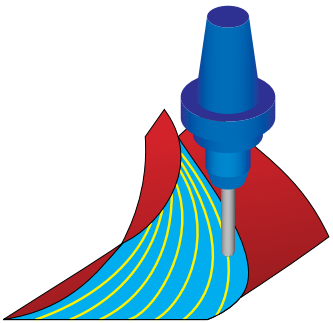

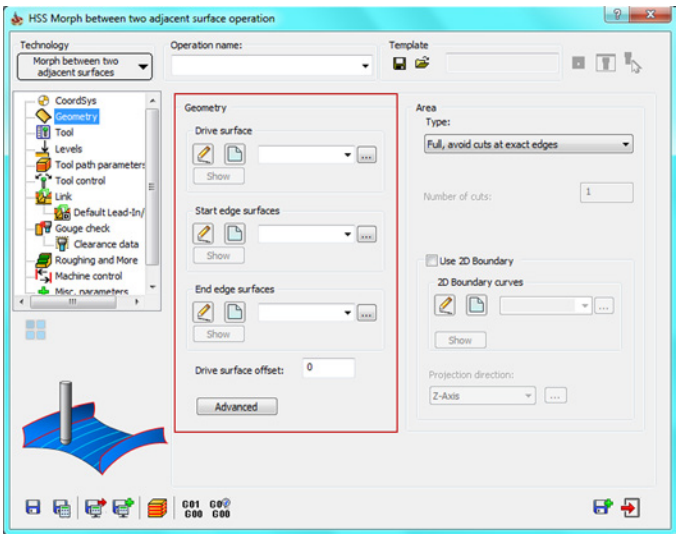

The following geometries must be defined for the **Morph between two adjacent surfaces** strategy:

- **Drive surface**

  The **Drive surface** section enables you to define the surface to be machined in the operation (see topic **3.1.1**).

Surfaces

The **Start edge surfaces** and **End edge surfaces** sections enable you to define the check surfaces geometry for the tool path generation.

The drive and check surfaces have to be adjacent, i.e. they must have a common edge.

Advanced options

SolidCAM enables you to define a number of advanced options for the **Morph between two adjacent surfaces** strategy. Click the **Advanced** button to display the **Advanced Options of Surface Paths Pattern** dialog box.

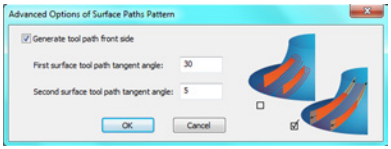

The **Generate tool path front side** option enables SolidCAM to take into account the normals of the defined check surfaces.

When this check box is not selected, the tool path is generated on the drive surface from all sides of the check surfaces.

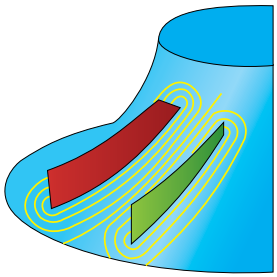

When this check box is selected, SolidCAM generates the tool path taking into account the direction of the check surfaces normals. The resulting tool path is located between the check surfaces only.

SolidCAM automatically extends the passes tangentially to the drive surface edges. Using the **First surface tool path tangent angle** and the **Second surface tool path tangent angle** parameters, you can change the extension direction. The direction can be changed for the first and last passes; all the internal passes are evenly morphed between them.

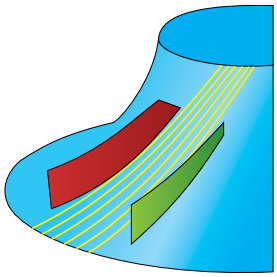

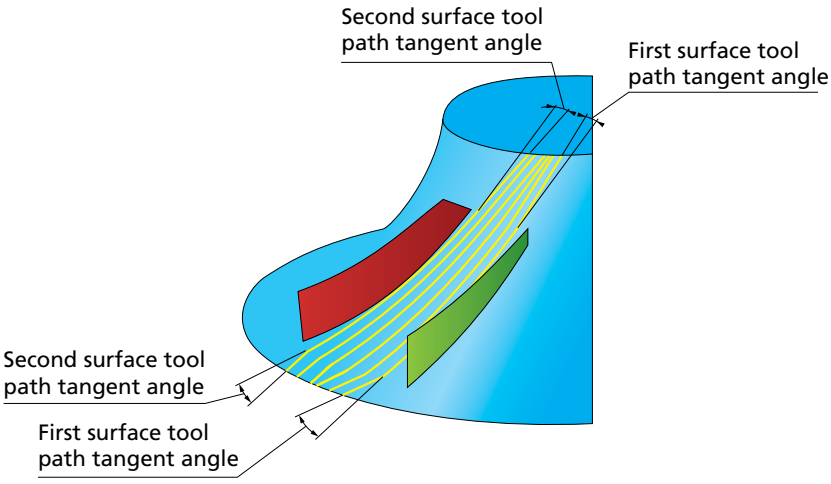

3.1.7 Geometry for the Projection strategies

The **Projection** strategies enable you to generate a single tool path along a curve projected on the drive surface. These strategies can be used for engraving or creating radial, spiral, offsetted tool path or of any other shape defined by the user.

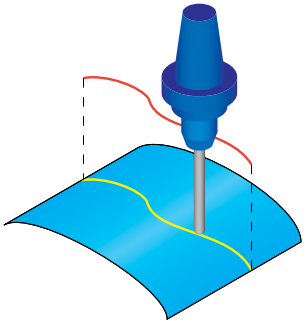

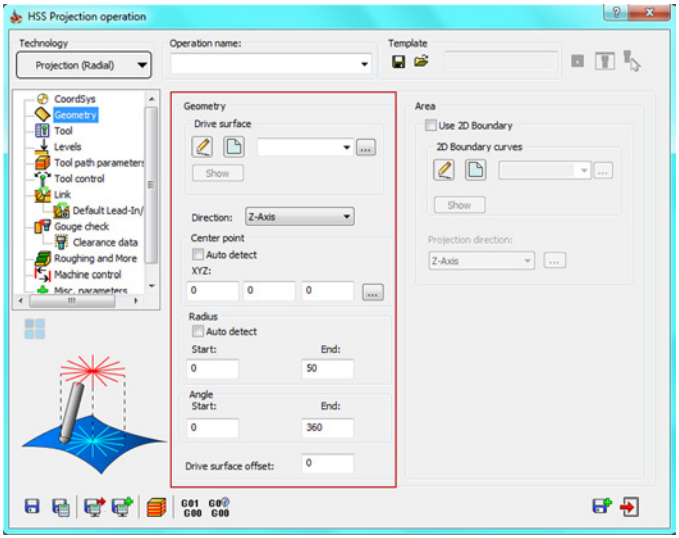

Technology

This section enables you to choose a strategy for creating a projection on the drive surface.

User defined

This strategy projects the curve selected in the **Projection curves** section down onto the drive surfaces.

Radial

This strategy projects a radial pattern on the surface. It can be particularly effective on circular shaped components and shallow areas. The **Center point** section enables you to define the center point of the radial pattern either by typing its coordinates or picking it on the model. The cuting area is defined by the **Start** and **End** radius and can be limited by angular span between 0 and 360.

Spiral

This strategy projects a spiral pattern on the surface. It can be particularly effective on circular shaped components and shallow areas. The **Center point** section enables you to define the center point of the radial pattern either by typing its coordinates or picking it on the model. The cutting area is defined by the **Start** and **End** radius. Machining starts from the inner circle defined by the **Start** radius cutting spirally in outward direction.

Offset

This strategy projects the curve selected in the **Projection curves** section down onto the drive surfaces and creates offsets on the **Left**, **Right**, or **Both** sides of the projection curve. The number of offsets is defined by the **Number of cuts** parameter.

The following geometries must be defined for the **Projection** strategy:

- **Drive surface**

  The **Drive surface** section enables you to define the surface to be machined in the operation (see topic **3.1.1**).

- **Direction**

  This section enables you to specify to which direction the curve is projected.

  X, Y, Z: The curve direction is defined as parallel to one of the Coordinate System axes.

  Line: The projection vector is defined by a line that you can pick directly on the solid model.

  Surface normal: This option projects the curve into the normal direction of the surface below.

  - If the curve/pattern lies exactly on the face, the tool path has the same shape and position as the curve.
  - If the curve/pattern lies above the drive surfaces, the tool path changes. The tool path is built only on an interval between those normals that intersect the curve.

  The projection has to lie within the **Max. projection distance** to the drive surface. Otherwise the curves cannot be considered for projecting. The option of **Surface normal** is available only in the **User defined** strategy.

- **Projection curves**

  The **Projection curves** section enables you to define the curves for the tool path generation.

  The option of **Projection curves** is available only in **User defined** and **Offset** strategies.

Max. projection distance

When the **Projection** tool path strategy is chosen, the system expects to get projection curves lying on the drive surfaces.

Due to tolerance issues in CAD systems, sometimes the curves do not lie exactly on the drive surfaces. This error can be compensated by the **Maximal projection distance** value. For example, if the value is 0.1 mm, it allows to have the projection curve 0.1 mm away from the drive surfaces.

- **Center point**

This section enables you to define the position of a center point of the virtual circle that SolidCAM creates to generate radial/spiral passes.

This position can be defined manually by entering the coordinate values in **XYZ** fields, picking the point directly on the solid model using the button, or automatically by selecting the **Auto detect** option.

- **Radius**

Start: This option enables you to create a virtual inner circle that starts the tool path from this inner circle so that the tool does not rub at the converging point where the radius is zero.

End: This option enables you to to stop the tool path at the extreme end of the virtual outer circle.

The **Auto detect** option enables you to detect the required maximum radius to automatically machine the surface.

- **Angle**

This section enables you to define an area based on two angles for the tool path calculation.

Start: This parameter defines the starting angle of area definition for the tool path calculation.

End: This parameter defines the ending angle of area definition for the tool path calculation.

The **Angle** option is available only in the **Radial** strategy.

3.2 Area

The **Area** section enables you to define the cutting area on the drive surface.

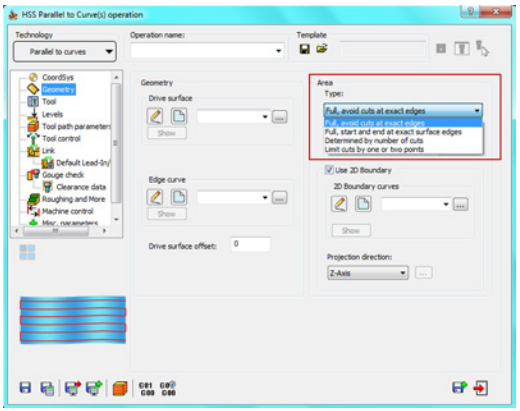

The following options are available to define the area:

- **Full, avoid cuts at exact edges**
- **Full, start and end at exact surface edges**
- **Determined by number of cuts**
- **Limit cuts by one or two points**

All of these options are unavailable with the **Projection** strategy.

3.2.1 Full, avoid cuts at exact edges

This option enables you to generate the tool path on the whole drive surface avoiding the drive surface edges. With this option, the minimal distance between the edge and the tool path is equal to half of the **Max. step over** (see topic **6.1.2**).

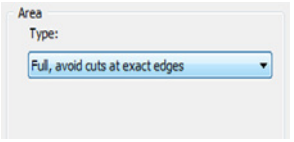

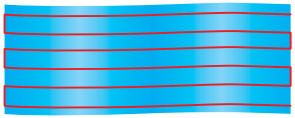

This option can be used when the boundary of the drive surfaces is not smooth and has gaps. The half of the **Max. step over** offset from the surface edge enables you to compensate these surface defects. In case of large gaps, SolidCAM enables you to handle them using the **Gap along cuts** option (see topic **8.2.1**).

The image illustrates the use of this option. Note that the machining does not start at the exact edge of the surface. Therefore the shape of the upper edge does not influence the tool path.

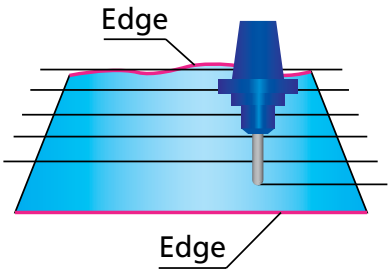

3.2.2 Full, start and end at exact surface edges

With this option, the tool path is generated on the whole surface starting and finishing exactly at the drive surface edges or at the nearest possible position.

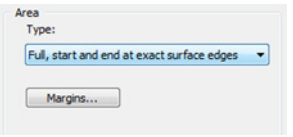

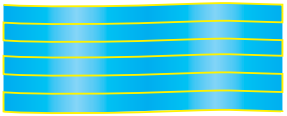

Make sure that the surface edges are perfectly trimmed. Gaps cause unnecessary tool air movements during the machining, therefore the **Full, avoid cuts at exact edges** option (see topic **3.2.1**) is preferable.

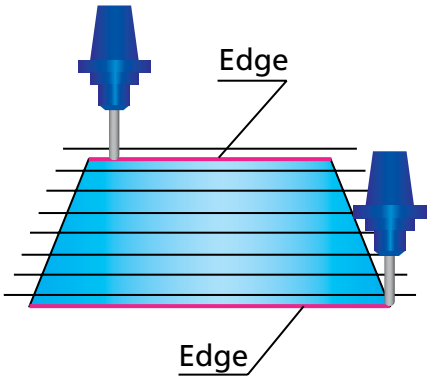

The number of cuts depends on the **Max. step over** value. Since the first and the last cuts are located exactly on the drive surface edges, SolidCAM modifies the specified **Max. step over** value (see topic **6.1.2**) to achieve equal distance between the cuts. The modified **Max. step over** used for the tool path calculation is smaller than the specified one.

Margins

You can define margins for the tool path calculation when working with the following strategies: **Morph between two boundary curves**, **Parallel to Curve(s)**, **Parallel to Surface** and **Morph between two adjacent surfaces**.

Click the **Margins** button.

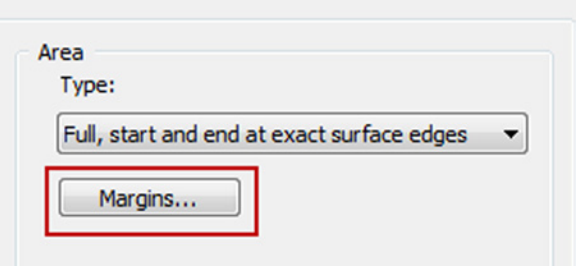

The **Margins** dialog box is displayed. This dialog box enables you to define a margin for the drive surface edges. The machining starts and finishes at the specified distances from the drive surface edges.

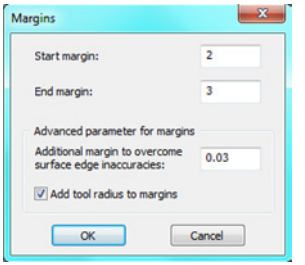

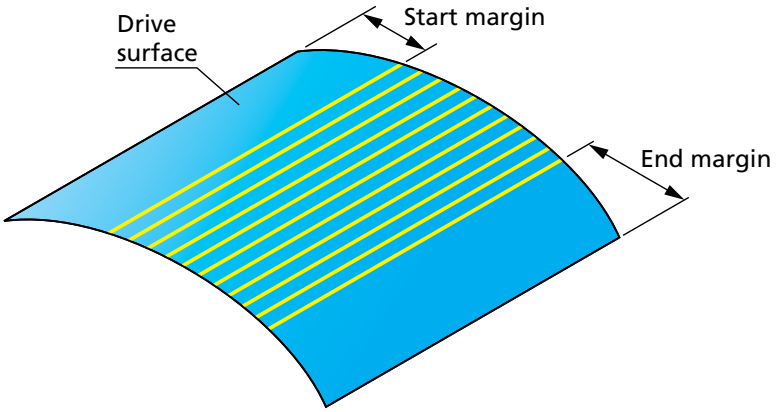

Advanced parameter for margins

Tool path strategies that use edge curves and surfaces sometimes encounter difficulties since CAD systems deliver the drive surfaces and the edge geometry (curves or surfaces) only within accuracy. If you would like to start the tool path exactly at the zero distance to the edge geometry, this is problematic, because the geometry can never be exactly aligned. To avoid this problem, SolidCAM provides you with the **Advanced parameter for margins** option.

The option of **Margins** is not available for the **Perpendicular to Curve** strategy.

The **Additional margin to overcome surface edge inaccuracies** parameter enables you to compensate the inaccuracy of the CAD model edges. For example, to get the tool path at the 5 mm distance from the geometry, set the margin to 4.97 mm and the **Additional margin to overcome surface edge inaccuracies** to 0.03.

The **Add tool radius to margins** option enables you to expand the cutting area, which is defined by margins, by adding the tool radius distance.

3.2.3 Limit cuts by one or two points

This option enables you to limit the tool path by one or two points.

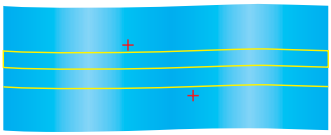

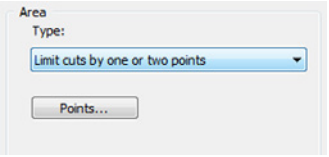

Click the **Points** button to define the limiting points with the **Limit cuts between 2 points** dialog box. This dialog box enables you to enter the coordinates of the limiting points or define them by picking directly on the solid model.

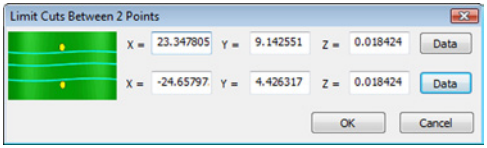

The defined limiting points must be located within the region of the cuts.

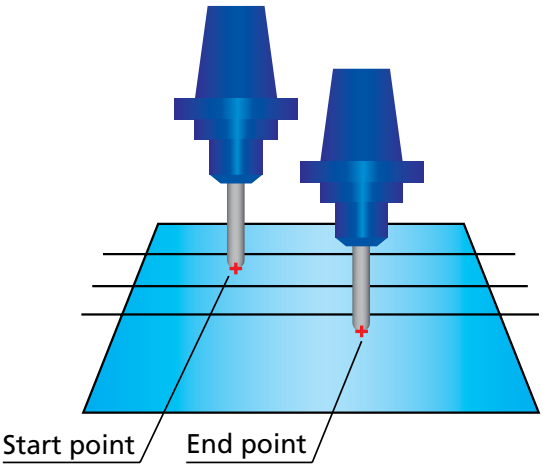

3.2.4 Determined by number of cuts

This option enables you to limit the tool path by a number of cuts. The **Number of cuts** parameter defines the number of cutting passes.

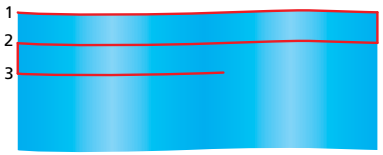

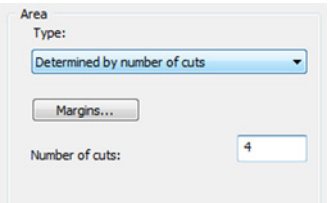

When the **Parallel to curves**/**Parallel to surface** strategy is chosen for the geometry definition, the **Determined by number of cuts** option generates the following tool path: the tool starts machining from the defined curve/surface and performs the number of cuts defined with the corresponding parameter.

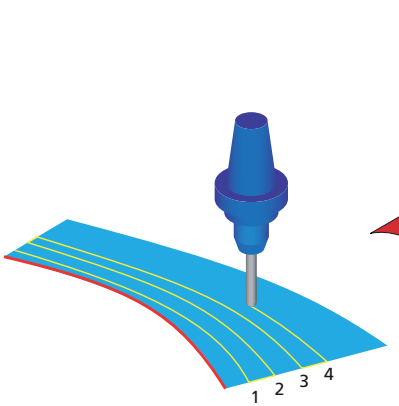

Parallel to curve

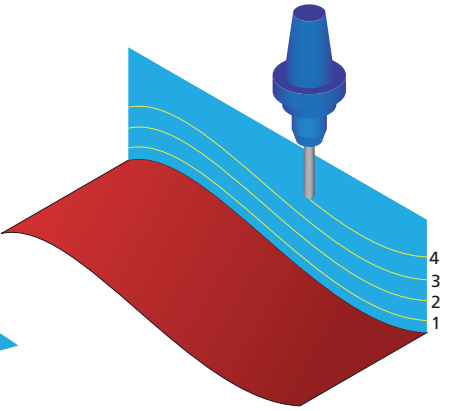

Parallel to surface

When the **Morph between two adjacent surfaces** strategy is chosen for the geometry definition, the area between the defined surfaces is divided by the number of cuts in such a manner that the first cut is performed at the **Start edge surface**, and the last cut at the **End edge surface**.

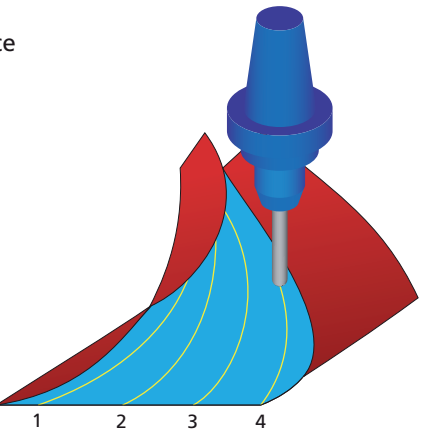

This option is available only for the **Parallel to Curve(s)**, **Parallel to Surface**, **Morph between two boundary curves** and **Morph between two adjacent surfaces** strategies.

Margins

SolidCAM enables you to define a margin, shifting the first and last cut locations. Click the **Margins** button to display the **Margins** dialog box.

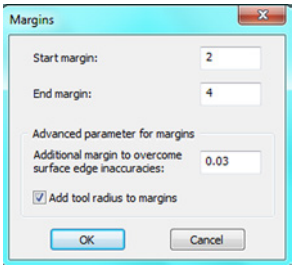

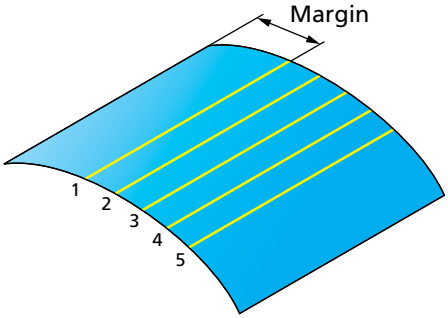

The location of the first cut is shifted by the distance specified by the **Start margin** parameter.

The **Start margin** and **End margin** options are available only for the **Morph between two adjacent surfaces** and **Morph between two boundary curves** technologies. Only one **Margin** parameter is available for **Parallel to Curve(s)** and **Parallel to Surface** technologies.

3.2.5 Use 2D Boundary

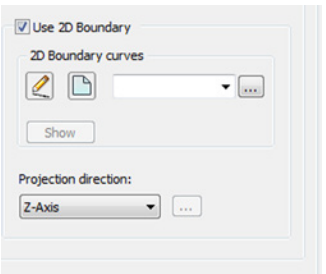

SolidCAM provides you with a functionality to limit the machining to specific model areas. The machining limitation is performed by a planar boundary that is projected on the model. The projected boundary is "virtually" trimming the drive surfaces. All the contact points of the tool and drive surfaces are enclosed by this projected boundary.

2D Boundary curves

SolidCAM enables you to define a boundary based on a **Working area** geometry (closed loop of model edges as well as sketch entities).

For more information on the **Working area** geometry, refer to the **SolidCAM Milling User Guide** book.

The **New** icon ( ) displays the **Geometry Edit** dialog box that enables you to define the geometry.

Using the **Edit** icon ( ), you can edit the geometry in the same dialog box.

The **Show** button enables you to display the already defined boundary directly on the solid model.

Projection direction

When a planar boundary is defined, SolidCAM automatically projects the geometry onto the solid model. The direction of the projection is defined by a vector.

SolidCAM enables you to choose an axis of the Coordinate System as a projection direction vector or define a vector by an end point (the start point is automatically considered to be located in the Coordinate System origin).

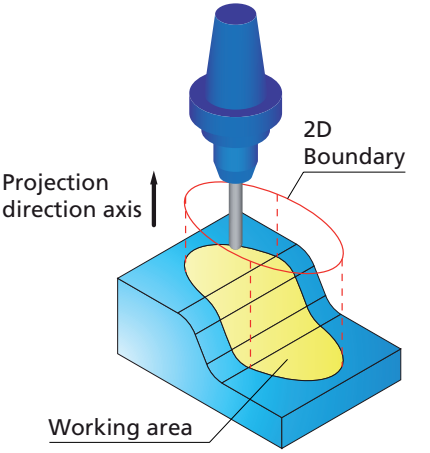

Tool 4

4.1 Tool definition

The **Tool** page enables you to choose a tool for the operation from the **Part Tool Table**.

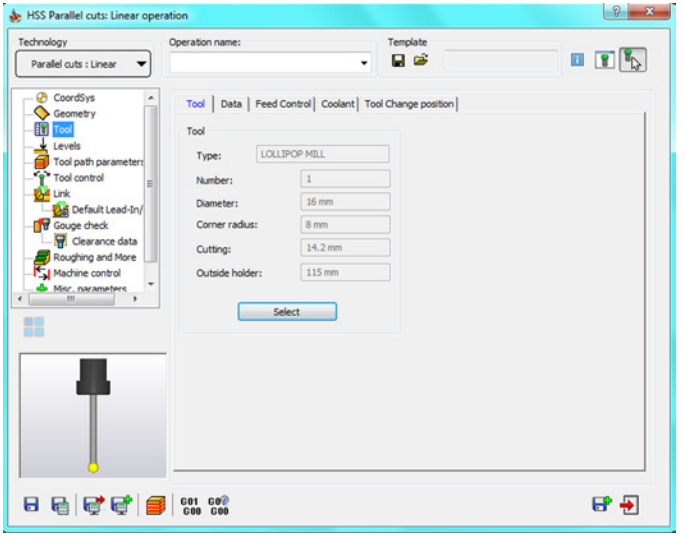

Click the **Select** button to display the **Part Tool Table** and choose a tool for the operation.

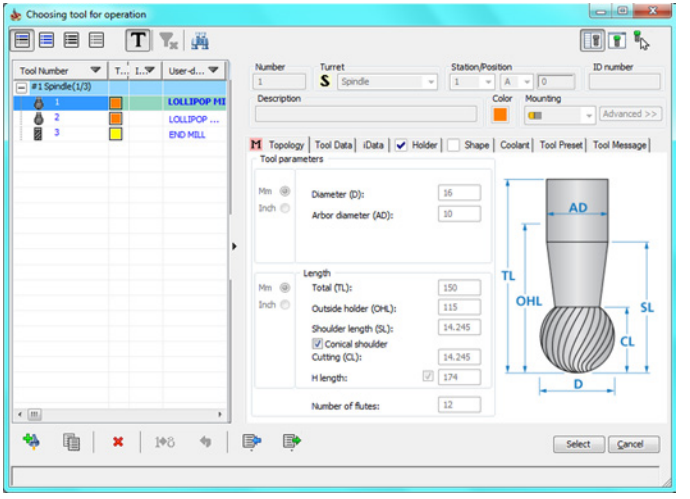

For more information on the tool definition, refer to the **SolidCAM Milling User Guide** book.

Click the **Data** tab to display and define the **Spin** and **Feed** parameters.

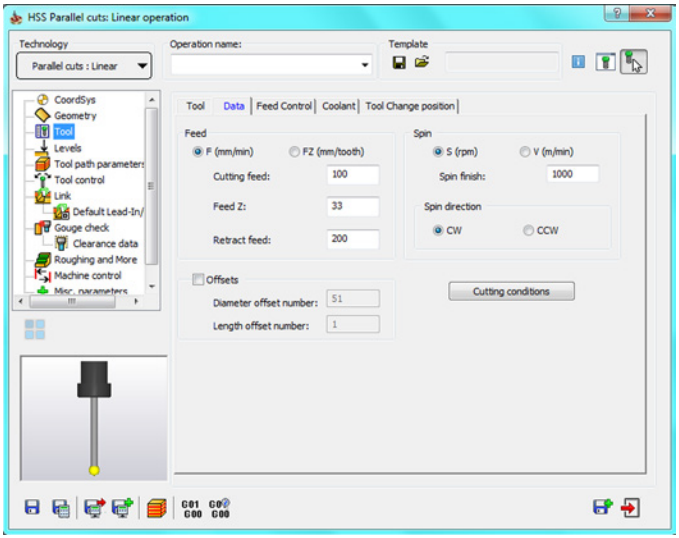

4.1.1 Spin definition

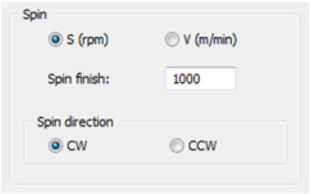

The **Spin** section enables you to define the spinning speed of the tool.

The spin value can be defined in two types of units: **S** and **V. S** is the default that signifies **Revolutions per Minute**. **V** signifies material cutting speed in **Meters per Minute** in the **Metric** system or in **Feet per Minute** in the **Inch** system; it is calculated according to the following formula:

V = (S * PI * Tool Diameter) / 1000

The **Spin direction** section enables you to choose between the clockwise (**CW**) or counterclockwise (**CCW**) direction.

4.1.2 Feed definition

The **Feed** section enables you to define the tool feed for the HSS operation.

The feed value can be defined in two types of units: **F** and **FZ**. **F** is the default that signifies **Units per minute**. **FZ** signifies **Units per tooth** and is calculated according to the following formula:

FZ = F/(Number of Flutes * S

The **F**/**FZ** buttons enable you to check the parameter values.

Cutting feed

This field defines the cutting feed rate of the tool.

Feed Z

This field defines the feed of the tool movements from the safety position to the cutting depth.

For Tap tools, SolidCAM automatically calculates the **Feed Z** (**F** and **FZ**) value according to the following formulas:

F=Spin Rate * Pitch

FZ=Pitch

The calculated values are displayed in the **Feed Z** field. These values cannot be changed.

Retract feed

This field defines the feed of the tool movements from the material to the retract level.

4.1.3 Offsets

The **Diameter offset number** parameter defines the number of the **Diameter Offset Register** of the current tool in the **Offset table** of the CNC-machine. The **Length offset number** parameter defines the number of the **Length Offset Register** of the current tool in the **Offset table** of the CNC-machine.

4.1.4 Cutting conditions

This button enables you to update the cutting conditions defined for use of the current tool on the chosen CNC-machine according to the parameters set in the **Part Tool Table**.

Click the **Feed Control** tab to display and define the **feed control** parameters.

4.1.5 Feed zone control

Sometimes more than required material is left on the surface that needs to be removed with lower than the actual cutting feed rate. This lower feed rate is required to minimize the chances of tool breakage or tool wear. The **Feed zone control** parameter allows you to define a volume to determine an area in which a higher or lower percentage of the cutting feed rate can be set. Select the check box. The **Feed control zone** dialog box is displayed.

Feed Zone

You can choose the appropriate geometry from the list or define a new one by clicking the **New** icon ( ). The **Select Faces** dialog box is displayed. This dialog box enables you to define the geometry for feed zone.

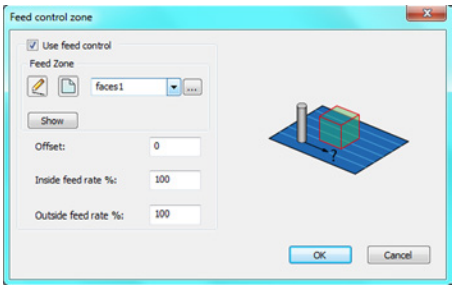

Offset

This field enables you to put an additional offset value on the feed control geometry in order to let the tool slow down before it enters the actual feed control geometry.

Feed rate percentage

The inside and outside feed rate percentage fields define the feed rate inside and outside of the feed control geometry as a percentage of the actual cutting feed rate.

4.1.6 Feed rate optimization

You can optimize the feed rate of different segments of the tool path. You define the machining feed rate, and SolidCAM modifies it according to the surface curvature. The surface curvature is calculated at each tool path position where the surface contact point of the tool is known.

This option is available only on single surfaces and cannot be used on the stitches between surfaces.

Select the check box. The **Feed Rate Control Optimization** dialog box is displayed. This dialog box enables you to define the feed rate according to the surface radius. The feed rate is defined as the percentage of the defined **Feed Rate** of the cutting movements.

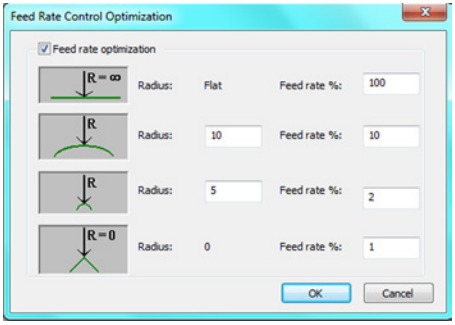

This section enables you to define the feed rate for the Flat tool path segments where the Curvature radius is Infinite.

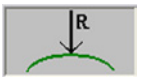

This section enables you to define the feed rate for the tool path segments of Large radius (the radius value can be customized).

This section enables you to define the feed rate for the tool path segments of Small radius (the radius value can be customized).

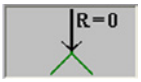

This section enables you to define the feed rate for the Sharp Corners of the tool path where the radius is equal to 0.

4.1.7 Rapid motion in G1 mode

Some CNC-machines do not support synchronization between axis motors when the rapid movement (**G0**) is performed. The absence of synchronization causes the deviation between the calculated path and the real tool movements. SolidCAM enables you to avoid the problems described above by replacing all rapid movements (**G0**) with non-rapid ones using a particular feed rate.

The **Rapid motion in G1 mode** group enables you to control the use of rapid feed (**G0**).

When the **Rapid motion in G1 mode** check box is not selected, the resulting GCode contains rapid movements (**G0**).

Example:

```
G0 X-2.942 Y75.567 Z24.402 A-88.436 B-26.482 M116
```

When the **Rapid motion in G1 mode** check box is selected, the resulting GCode does not contain **G0** commands. The rapid movements are performed using the feed rate defined by the **Rapid feed rate** parameter.

Example:

```
G1 X-2.942 Y75.567 Z24.402 A-88.436 B-26.482 F9998 M116
```

First cut feed rate percentage

In some machining cases, the tool load is not uniform along the tool path; the maximum tool load is reached along the first cutting pass. The **First cut feed rate percentage** option enables you to change the feed rate at the first cutting path in order to optimize the cutting process. The feed rate is changed as a percentage of the defined feed rate (see topic **4.1.2**).

Levels 5

The **Levels** page enables you to define the **Clearance area** and the machining levels.

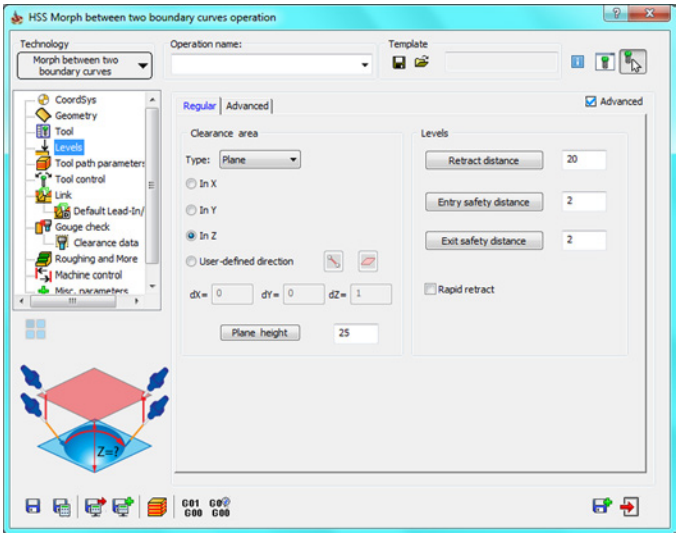

5.1 Regular

The **Regular** tab enables you to define the parameters for clearance area and machining levels.

5.1.1 Clearance area

The **Clearance area** is the area where the tool movements can be performed safely without contacting the material. The tool movements in the **Clearance area** are performed with the rapid feed.

Depending on the drive surface or your machining strategy, you can choose different clearance area types:

- **Plane**
- **Cylinder**

Plane

This option enables you to define the **Clearance area** by plane. The tool performs a retract movement to the **Clearance area** plane, and then a rapid movement in this plane.

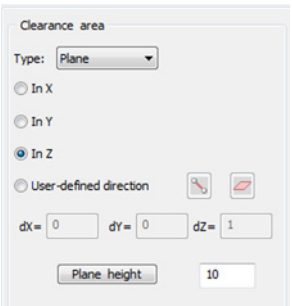

The plane orientation is defined by a vector normal to the plane. With the **In X**, **In Y** and **In Z** options, SolidCAM enables you to define this vector as one of the Coordinate System axes (X, Y or Z).

The **Plane height** parameter defines the distance between the appropriate Coordinate System plane and the **Clearance area** plane.

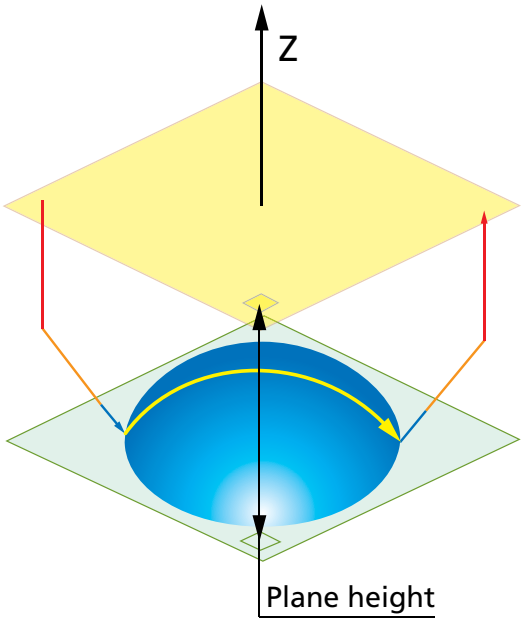

The **User-defined direction** option provides you with an additional capability to define the plane by an arbitrarily-oriented vector.

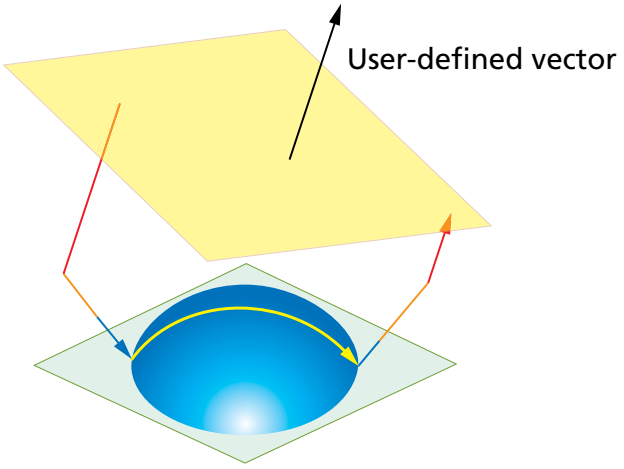

This option enables you to define the direction vector by its coordinates (**dX**, **dY** and **dZ** parameters). Using the icons, you can pick the start and end points of the vector directly on the solid model, or select the entire face.

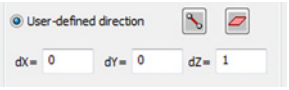

Cylinder

This option enables you to define the **Clearance area** as a cylindrical surface enclosing the **Drive surface**. The tool performs a retract movement to the **Clearance** cylinder, and then a rapid movement along the cylinder surface.

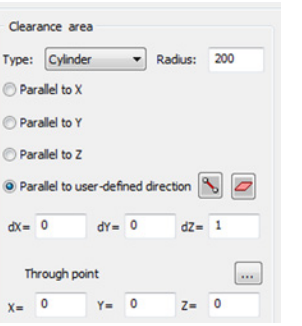

The **Radius** parameter enables you to specify the cylinder radius.

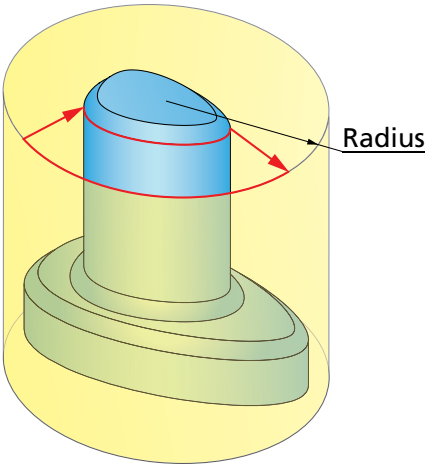

The **Parallel to X**, **Parallel to Y** and **Parallel to Z** options enable you to define the cylinder axes only parallel to one of the Coordinate System axes (X, Y or Z).

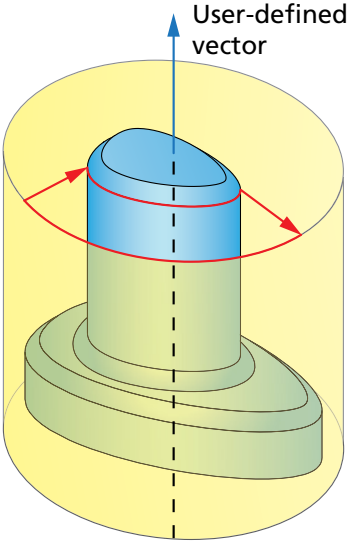

The **Parallel to user-defined direction** option provides you with an additional capability to define the cylinder axis by an arbitrarily-oriented vector.

It enables you to define the direction vector by its coordinates (**dX, dY** and **dZ** parameters). Using the icons, you can pick the start and end points of the vector directly on the solid model, or select the entire face.

By default, the cylinder axis passes through the Coordinate System origin. You can specify the cylinder axis location either by clicking the **Through point** button or by defining the X, Y and Z coordinates of a point on the cylinder axis.

5.1.2 Machining levels

The **Levels** parameters enable you to define the **Retract** and **Entry**/**Exit safety distance** to approach and retract from the part.

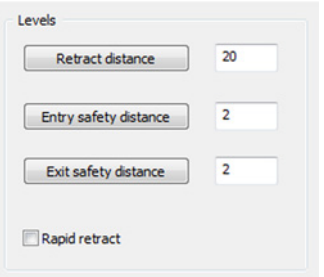

Retract distance

The tool performs a rapid descent movement from the **Clearance area** to the level specified by the **Retract distance** parameter.

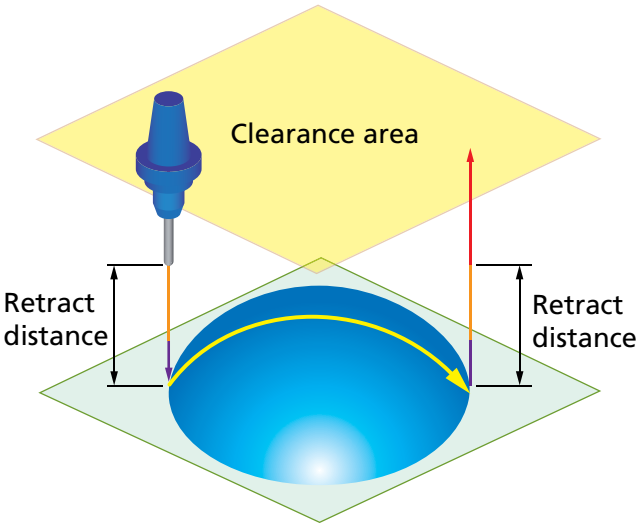

Safety distance

After the descent movement to the **Retract distance** level, the tool starts the approach movement to the material. The approach movement consists of two segments. The first segment is performed with rapid feed up to the **Entry safety distance**. From the **Entry safety distance** level, the approach movement is performed with the cutting feed. Upon retraction, the tool ascends to the **Exit safety distance.**

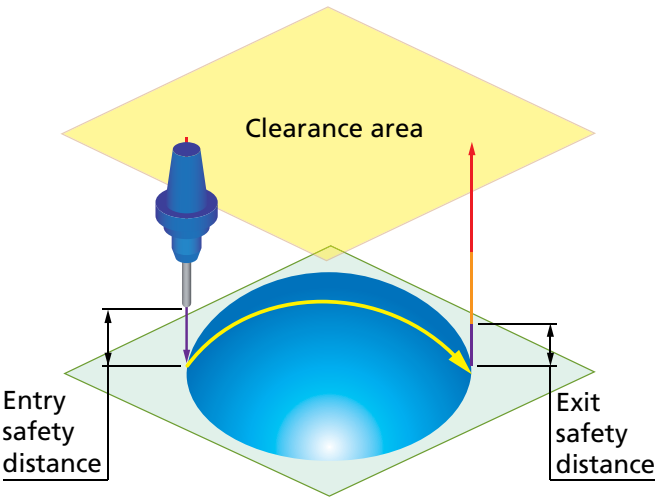

Rapid retract

This option enables you to perform the retract movement with rapid feed.

When this check box is not selected, the tool moves to the **Exit safety distance** with the feed defined as the **Retract feed** parameter (see topic **4.1.2**).

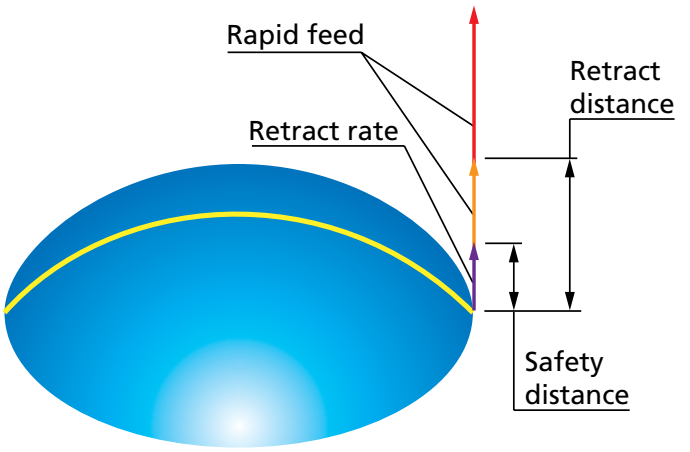

When this check box is selected, the retract movement is performed with rapid feed.

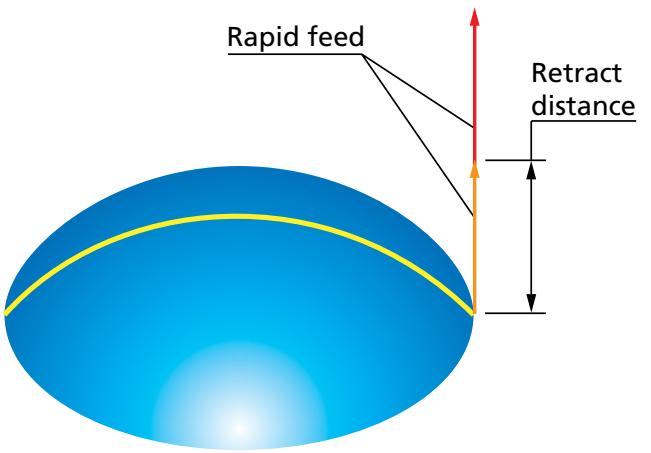

5.2 Advanced

The **Advanced** tab enables you to define the parameters to control rapid retracts. This tab is visible only when the **Advanced** check box is selected.

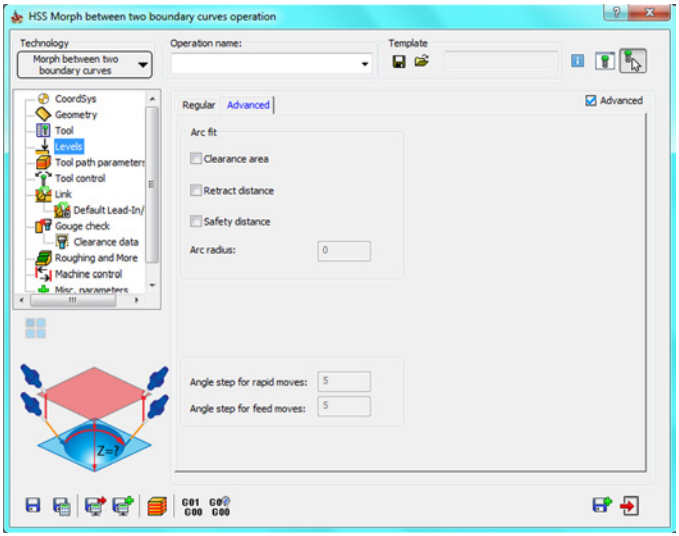

5.2.1 Arc fit

SolidCAM enables to add tangential arcs for the approaching and retracting link segments. The arc can be defined for **Clearance area**, **Retract distance**, and **Safety distance**.

The radius value is set in the **Arc radius** field.

5.2.2 Angle step for rapid moves

SolidCAM enables you to approximate by lines the curved rapid movements performed in the cylindrical clearance area.

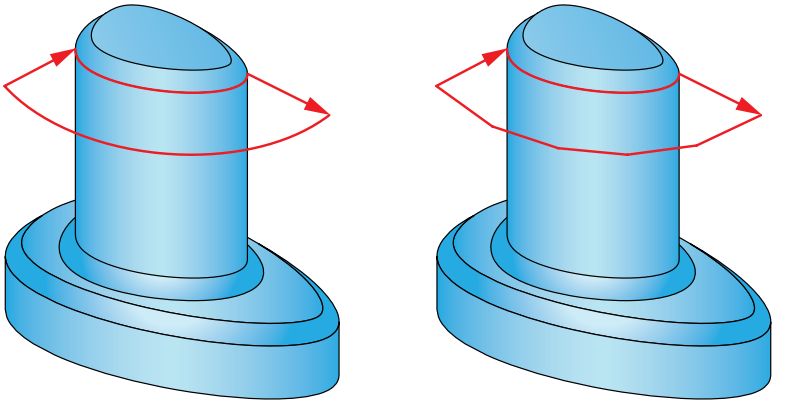

The approximation is controlled by the **Angle step for rapid moves** parameter illustrated below.

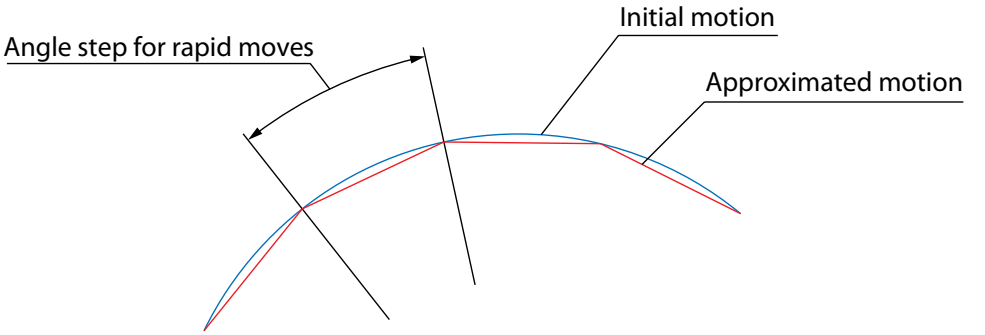

Small values of the **Angle step for rapid moves** parameter cause less deviation between the initial curve and the approximated path, but may cause some machines to slow down.

Using larger values of the **Angle step for rapid moves** parameter, you can reduce the number of approximation lines thus increasing the motion speed; however then collisions are possible, since the curved motion is simplified (when the **Angle step for rapid moves** is set to **90°** the circular movement is approximated to a square).

5.2.3 Angle step for feed moves

Similar to rapid movements, SolidCAM enables you to approximate by lines the curved feed movements.

The options of **Angle step for rapid moves** and **Angle step for feed moves** are available only when **Cylinder** is selected as the **Clearance area Type**.

Tool path parameters

6

The **Tool path parameters** page enables you to define the parameters of finish machining.

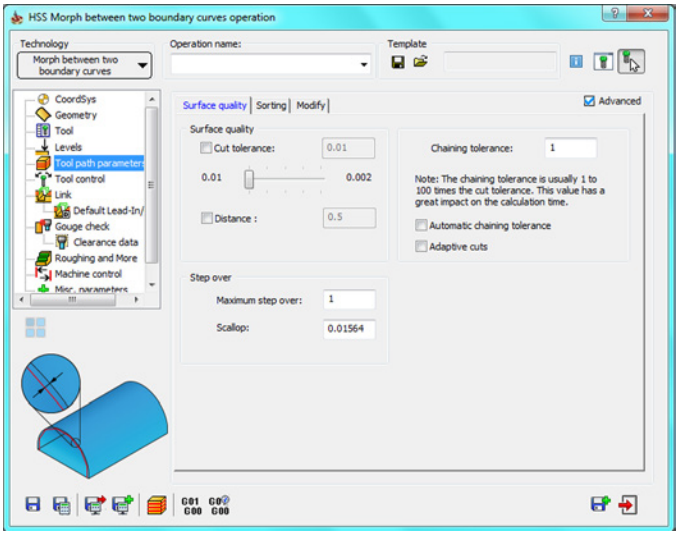

6.1 Surface quality

The **Surface quality** tab enables you to define the parameters that affect the surface finish quality.

6.1.1 Cut tolerance

The **Cut tolerance** parameter defines the tool path accuracy: the chordal deviation between the machined surface and the tool path; the tool path can deviate from the surface in the range defined by **Cut tolerance**.

A smaller **Cut tolerance** value gives you more tool path points on the drive surface resulting in more accurately generated tool path. The result is a better surface quality, but the calculation time is increased.

A greater **Cut tolerance** value generates less points on the tool path. After the machining, the surface finish quality is lower, but the calculation is much faster.

You can type the value manually or adjust it using the slider. The fixed values available on the slider are defined in the SolidCAM settings, under **Defaults** > **Tolerance** > **HSS**.

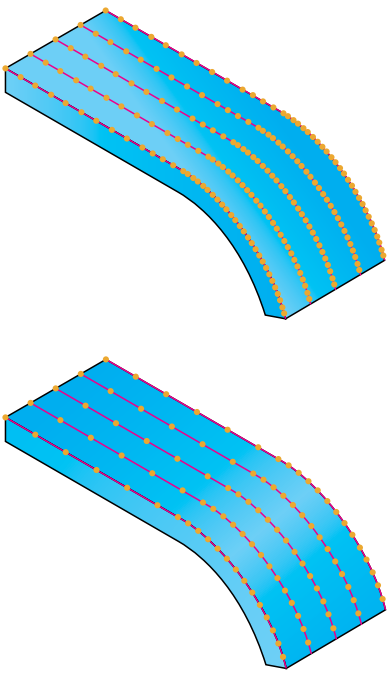

Distance

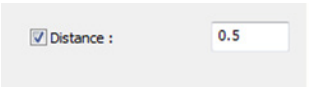

The **Cut tolerance** parameter defines the number of tool path points on a surface. The distance between these points is not constant and depends on the surface curvature: there are less points calculated on flat surfaces and more points on curved surfaces. The **Distance** parameter enables you to define the maximal distance between two consecutive tool path points. In other words, when the **Distance** option is used and the value is defined, SolidCAM generates tool path points at least at every specified distance.

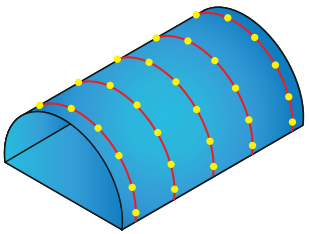

The **Distance** option is not used

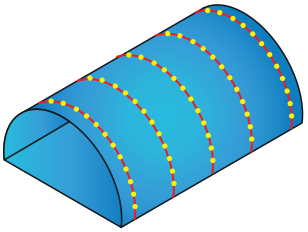

The **Distance** option is used

When the **Distance** option is not used, the number of tool path positions is determined by the **Cut tolerance** parameter.

6.1.2 Step over

This option enables you to define the maximum step over and scallop parameters.

Maximum step over

This parameter defines the maximum distance between two consecutive cuts.

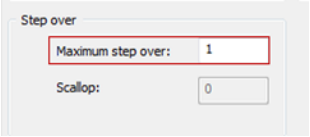

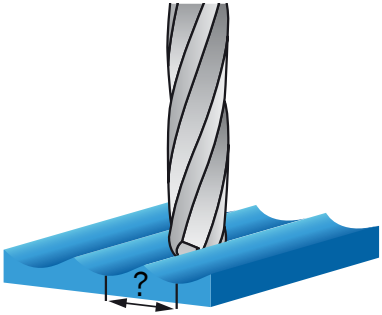

The definition of the **Maximum step over** parameter is different for each machining strategy:

- For the **Parallel cuts** strategies (see topic **3.1.1**), the **Maximum step over parameter** defines the distance between the parallel planes.
- For the **Parallel to curve/surface** strategies (see topics **3.1.2** and **3.1.3**), the **Maximum step over** defines the distance between two consecutive passes along the drive surface.
- For the **Perpendicular to curve** strategy (see topic **3.1.4**), the **Maximum step over** is measured along the curve, perpendicular to which the cutting planes are created.
- For the **Morph between two boundary curves/Morph between two adjacent surfaces** strategies (see topics **3.1.5** and **3.1.6**), the **Maximum step over** defines the distance between two consecutive passes along the drive surface.
- For the **User defined** technology of the **Projection** strategy (see topic **3.1.7**), the **Maximum step over** parameter is not relevant, because the projection curves can be chosen arbitrarily. For the **Spiral** and **Radial** technologies, the **Maximum step over** defines the distance between two consecutive passes.

Scallop

The **Scallop** parameter enables you to define the cusp height of the machined surface.

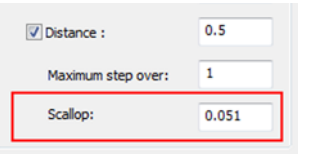

The **Scallop** parameter is available only when a **Ball Nose Mill** tool is chosen for the operation.

The **Scallop** parameter corresponds to the **Maximum step over** parameter. When the **Scallop** is defined, SolidCAM automatically updates the **Maximum step over** value according to the chosen tool diameter and the **Scallop**; vise versa, when the **Maximum step over** is redefined, SolidCAM automatically recalculates the **Scallop** value.

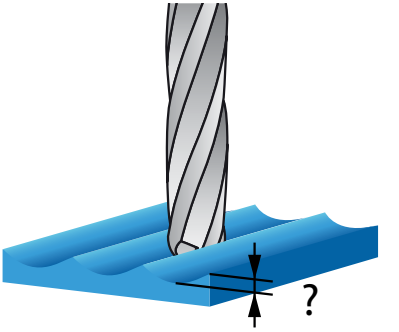

6.1.3 Advanced options for surface quality

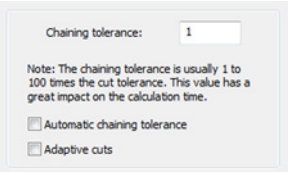

The **Chaining tolerance** parameter defines the tolerance of the initial grid used for the tool path calculation. The recommended value is 1 to 10 times the **Cut tolerance**. In some cases, for simple untrimmed surfaces, the **Chaining tolerance** value can be defined up to 100 times the **Cut tolerance** and would increase the calculation speed significantly.

The surface contact paths are created while analyzing and slicing the surface patches. If due to slicing the tool path topology becomes very complex (for example, patches parallel to curve and surface are very large), sometimes the surface contact paths cannot be constructed safely.

If the **Automatic chaining tolerance** check box is selected, a finer grid (based on the **Maximum step over** value) is applied for initial analysis of surface patches, thus delivering slow but safe results for surface contact points.

Adaptive cuts

This check box enables you to adjust the step over between tool path passes adaptively, in order to ensure an acceptable distance between adjacent passes. This option is especially useful in machining of steep surfaces, molds, and U-shaped parts.

When this check box is not selected, the tool path passes can be distributed in such a manner that the distance between them is varying throughout the tool path. In certain cases, such distribution of passes may result in poor quality of surface machining.

When this check box is selected, additional lines can be inserted in the tool path if the distance between two adjacent passes is considered too large. As a result, the number of calculated cuts is increased.

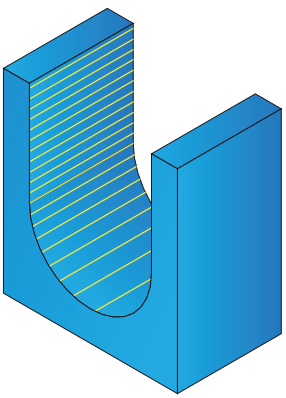

Adaptive cuts check box is not selected

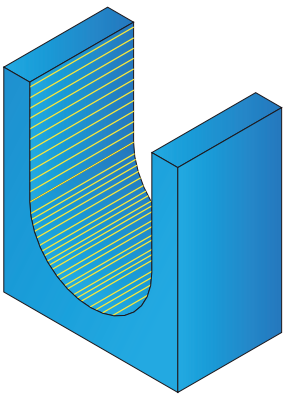

Adaptive cuts check box is selected

This option is not available for use with the **Parallel cuts**, **Perpendicular to curve** and **Projection** strategies.

Note that when this option is used, the calculation time increases.

6.2 Sorting

The **Sorting** tab enables you to define the order and direction of the cuts.

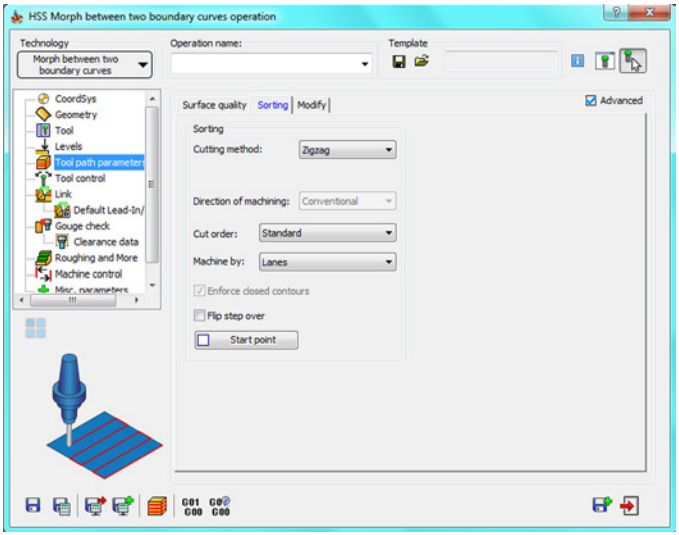

6.2.1 Cutting method

This option enables you to define how the cuts are connected. It has three choices: **One Way**, **Zigzag**, and **Spiral**.

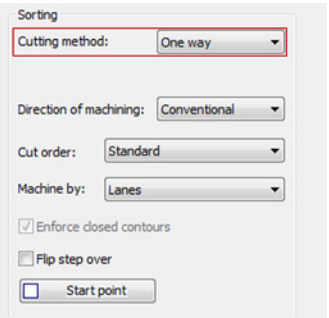

One way

When the **One way** option is chosen, all cuts are machined in the same direction. The tool performs the machining of a cut in the specified direction, then moves to the start of the next cut and machines it in the same direction.

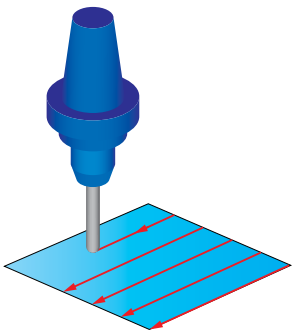

One Way

Zigzag

When the **Zigzag** option is chosen, the machining direction changes from cut to cut. The tool performs the machining of a cut in the specified direction, then moves to the next cut and machines it in the opposite direction.

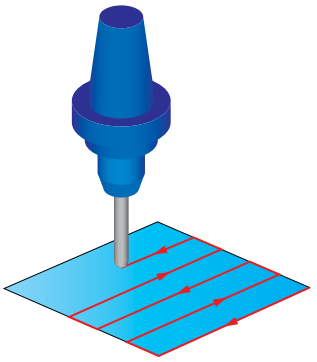

Zigzag

Spiral

With the **Spiral** option, SolidCAM generates a spiral tool path around the drive surface according to the chosen pattern.

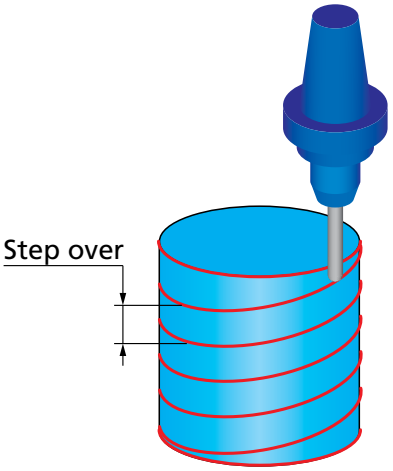

Spiral

The spiral pitch is defined by the **Max. step over** parameter.

This cutting method is available for use with all the machining strategies except for the **Projection** strategy (see topic **3.1.7**).

The **Advanced** button displays the **Advanced options for spiral machining** dialog box.

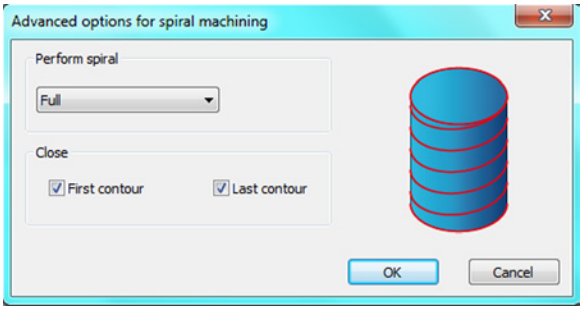

- **Perform spiral**

  When the **Full** option is chosen, the cuts are performed in constant spiral motions.

  When the **Blend along distance** option is selected, every slice except for the last one is trimmed by a certain distance. The trimmed slice is connected with the following slice by a blend spline. The value in the corresponding edit box defines the trimming distance for the slice in case the **Blend along distance** option is chosen.

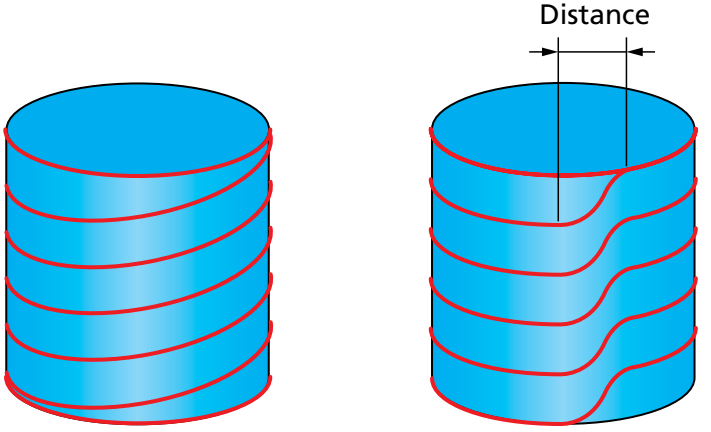

Full spiral Blend along distance

- **Close**

  When the **First contour** check box is selected, machining of the first slice is performed in a closed contour. The spiral machining motions start with the second slice.

  When this check box is not selected, the spiral machining motions start with the first slice. Likewise, when the **Last contour** check box is selected, machining of the last slice is performed in a closed contour.

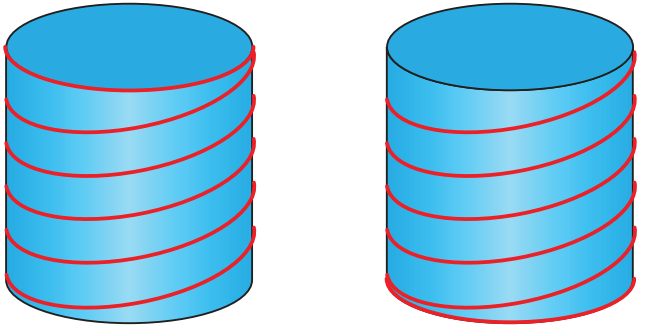

First contour Last contour

6.2.2 Direction of machining

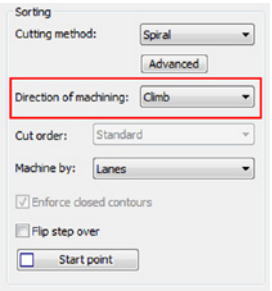

When the **One way** or **Spiral** options are chosen for **Cutting method**, SolidCAM enables you to define the following directions of cuts.

- The **CCW** option enables you to perform the machining in the counterclockwise direction.
- The **CW** option enables you to perform the machining in the clockwise direction.

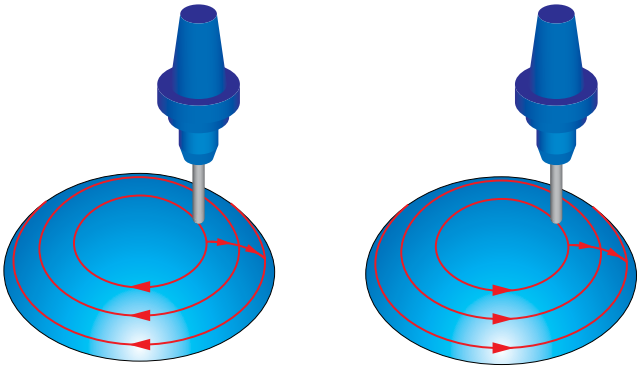

Clockwise Counterclockwise

- The **Climb** option enables you to perform climb milling, which is preferred when milling heat treated alloys. Otherwise, chipping may result when milling hot rolled materials due to the hardened layer on the surface.
- The **Conventional** option enables you to perform the conventional milling, which is preferred for milling of castings or forgings with very rough surfaces.

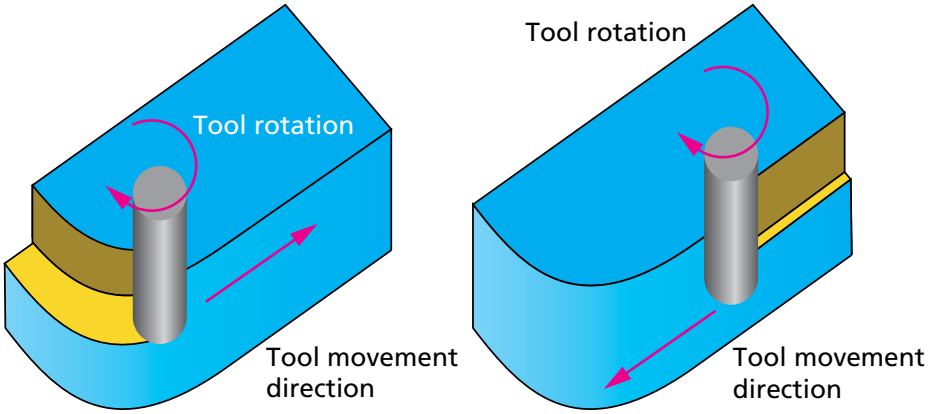

Conventional milling Climb milling

6.2.3 Cut order

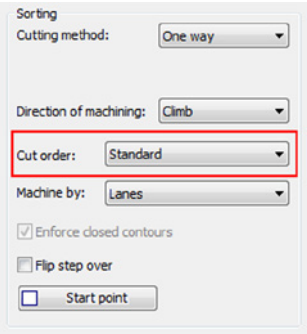

The **Cut order** option enables you to define the sequence of the cuts when the **One way** or **Zigzag** options are chosen for **Cutting method**. The following options are available:

- With the **Standard** option, SolidCAM performs the machining from one side of the drive surface and continues to the other side.

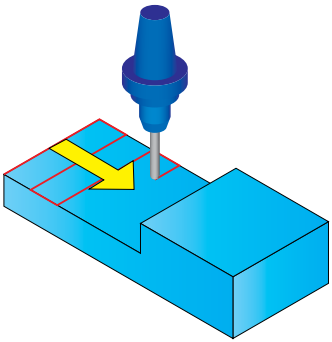

- With the **From center away** option, the machining starts from the center of the drive surface and continues outwards.

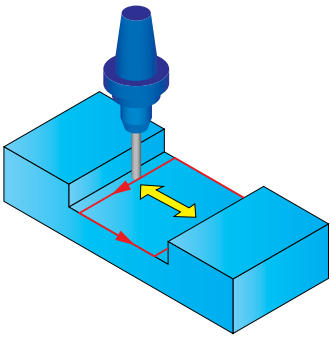

- With the **From outside to center** option, the machining starts from the drive surface edges and continues inwards.

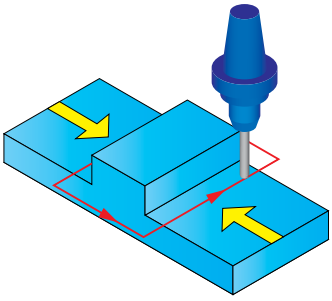

6.2.4 Machine by

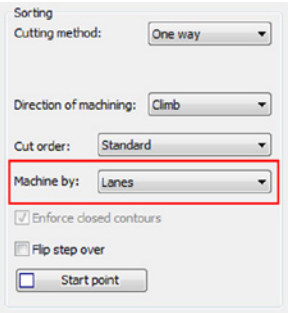

SolidCAM enables you to define the machining order for the operation. The **Machine by** list enables you to choose the order of machining of certain areas; it defines whether the surface will be machined by **Lanes** or by **Regions**.

The generated tool path usually has a topology of multiple contours (lanes) on the drive surfaces. When the tool path is generated in many zones, it might be preferable to machine all the regions independently.

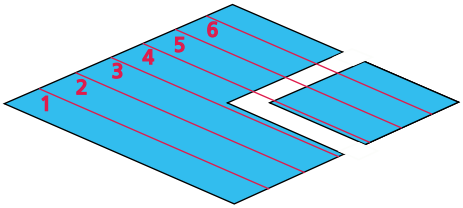

Lanes

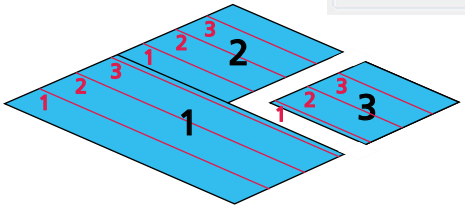

Regions

6.2.5 Enforce closed contours

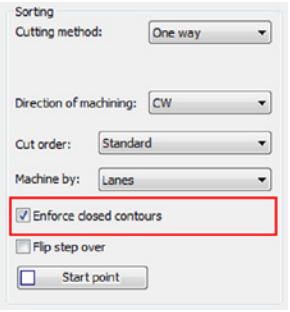

When the geometry is not completely closed, the **Enforce closed contours** option enables you to close the geometry and perform the machining of closed contours.

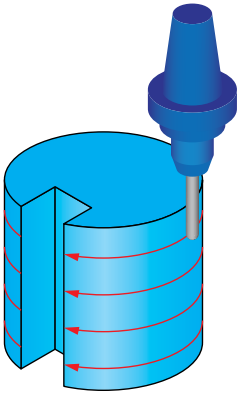

Enforce closed contours option is not selected

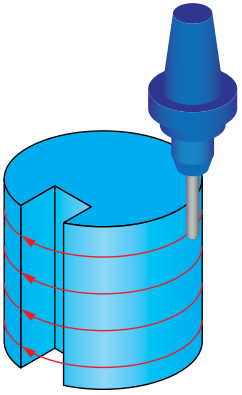

Enforce closed contours option is selected

This option is available only with the **CW** and **CCW** options chosen for **Direction of machining** (see topic **6.2.2**).

6.2.6 Flip step over

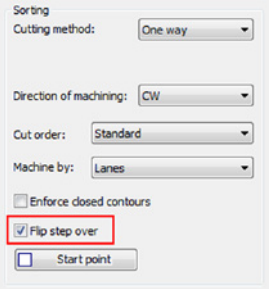

When the **Standard** option is chosen for the **Cut order**, the **Flip step over** parameter enables you to change the order of the cuts.

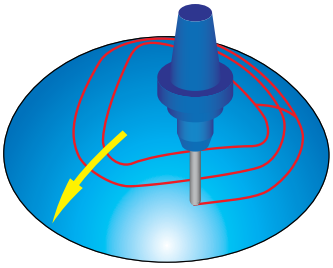

With the **Standard step over** option machining starts from the model's top inwards.

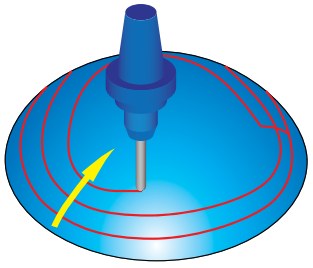

With the **Flip step over** option machining is reversed and starts from the edge inwards.

6.2.7 Start point

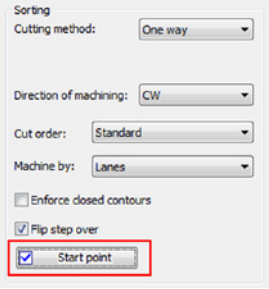

The **Start point** option enables you to define a new position of the start point of the first cut. The position is defined along a cut. The start points of the next cuts are determined automatically, taking into account the start point location, the cutting strategy and the **Rotate by** parameter.

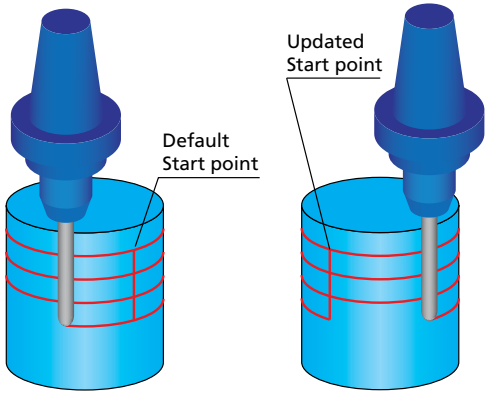

The **Start point** button displays the **Start Point Parameters** dialog box.

Start point by

This section enables you to choose the method of start point definition.

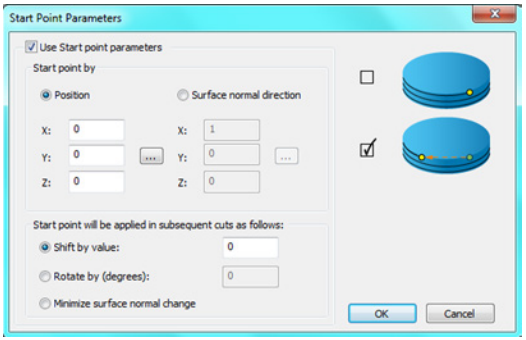

- **Position**

  This option enables you to define the Start point position by specifying its coordinates. The coordinates of the selected point are displayed in the **X**, **Y** and **Z** edit boxes.

- **Surface normal direction**

  When this option is chosen, the start point is located at the intersection of the tool path with the vector specified by user-defined **XYZ** coordinates. Vector coordinates can be set by numeric values, or the direction can be picked on the model using the button.

The selected start point is applied to the first cut. For the subsequent cuts, you can define the start point using one of the following options:

- **Shift by value**

  This option enables you to start the next cut at a specified distance from the previous start point. The distance defined in related edit box is measured along the path.

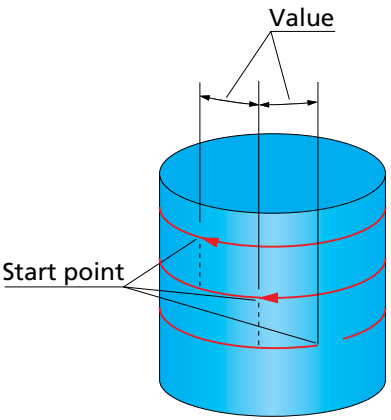

- **Rotate by**

  This option enables you to rotate the start position of the cuts relative to the start position of the first cut. The **Rotate by** value defines the rotation angle for start positions for subsequent cuts.

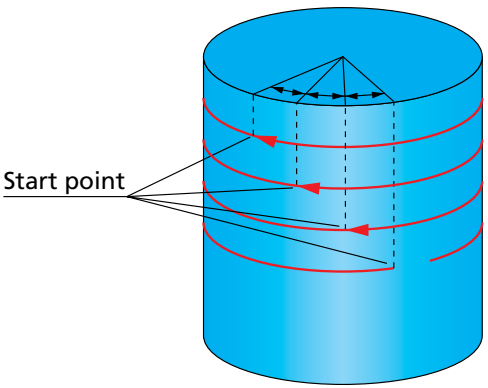

- **Minimize surface normal change**

  With this option, SolidCAM automatically chooses the start points for passes in such way that the change of the direction between surface normals at the start points is minimal.

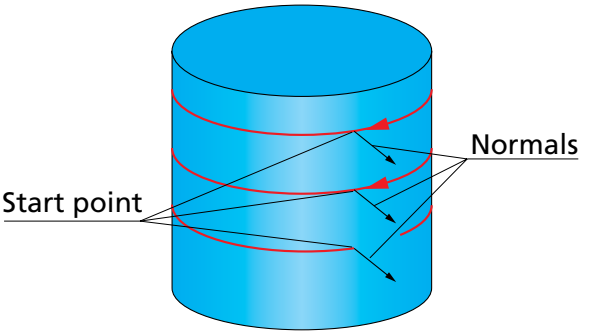

If the defined start point position is not located on the drive surface, SolidCAM automatically determines the closest point on the drive surface and uses it as the start point.

Reverse

The **Reverse** parameter changes the start point of the tool. When the **Reverse** check box is selected, the tool starts from outside and moves towards the center. If this check box is not selected, the tool moves from inside towards outside.

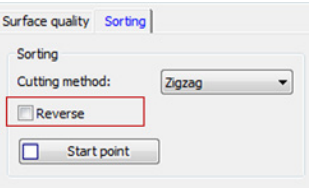

This parameter is available only in the **Projection (Radial)** strategy.

Cutting side

This parameter enables you to position the tool at the **Center**, **Left** or **Right** side of the tool path.

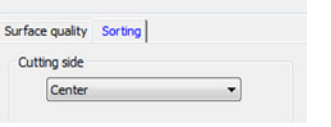

This option is available for use only with the **Projection (User defined** and **Offset)** strategy.

6.3 Modify

The **Modify** tab enables you to define the parameters that affect the tool path in various ways. This tab is visible only when the **Advanced** check box is selected. This tab is unavailable for **Projection** strategies.

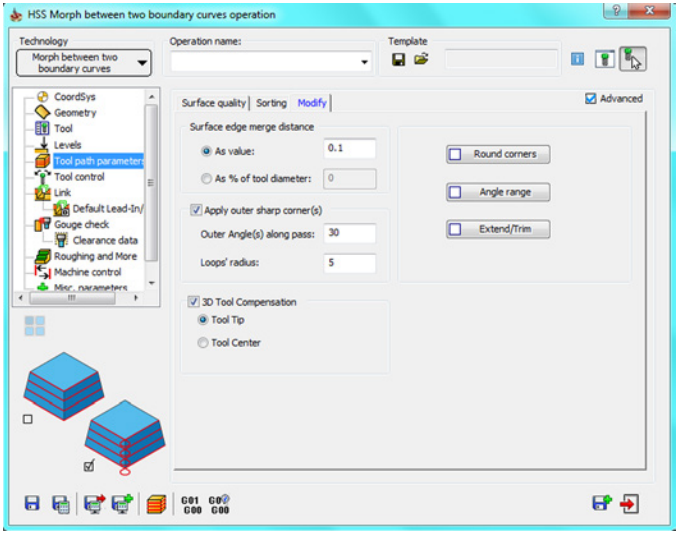

6.3.1 Surface edge merge distance

SolidCAM generates first tool path passes for individual surfaces. Then they are merged together to form the complete tool path.

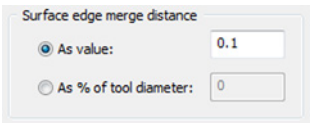

The decision about merging is based on the **Surface edge merge distance** parameter. If all surface paths on a tool path slice are merged, SolidCAM checks if a closed surface path can be built by connecting the start to the end. This decision is made based on the **Surface edge merge distance** parameter.

The **Surface edge merge distance** can be defined either as a numeric value (the **As value** option) or as a percentage of the tool diameter (the **As % of tool diameter** option). In both cases, this limit value must be greater than or equal to the **Cut tolerance** value.

6.3.2 Apply outer sharp corners

This option enables you to perform machining of adjacent outer edges of the model in such a manner that the sharpness of the corners is preserved. Instead of rolling around the edge that results in rounding of the corner, the tool path is extended for both edge surfaces, and the extensions are connected with a loop, resulting in an absolutely sharp machined corner.

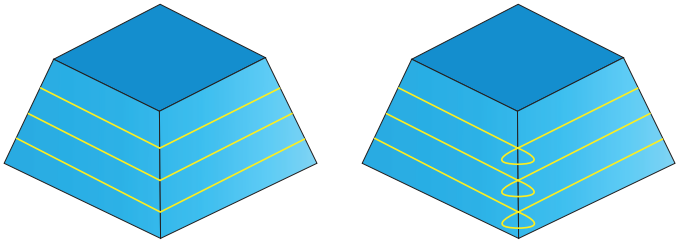

When this check box is selected, you can define the parameters and conditions for corner looping.

The **Outer Angle along pass** parameter defines the maximal value of the angle between two normals to the surfaces of the corner to enable looping; for angles greater than defined, loops will not be performed.

The **Loops** radius value defines the radius of the loop to be performed.

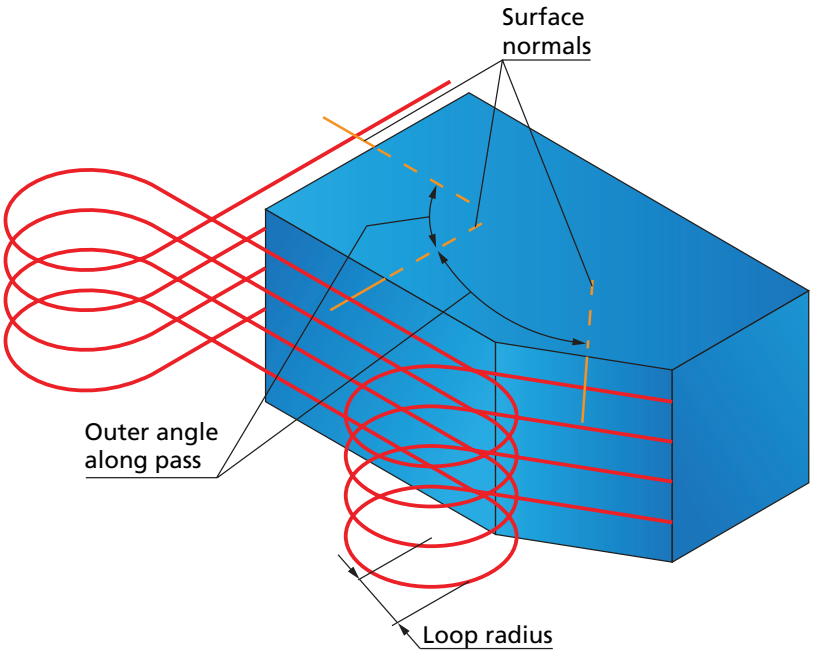

Note that when the **Loops radius** is smaller than the radius of the tool, loops will not be performed.

6.3.3 3D Tool compensation

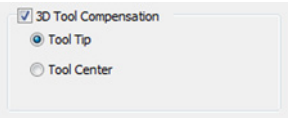

When this check box is selected, the tool compensation options of the CNC-controller are used in the GCode. The output tool path is recalculated according to the following formula:

C = T + R * N,

where **C** is a new coordinate of tool center, **T** is the coordinate of tool tip, **R** is the corner radius of the tool, and **N** is the tool vector.

When the Tool tip option is chosen, the tool path is calculated according to the tool tip, and the *type_offset_3D:tool_tip* command is output to the GCode under *@compensation_3d*.

When the Tool center option is chosen, the tool path is calculated according to the tool center and the *type_offset_3D:tool_center* command is output to the GCode under *@compensation_3d*.

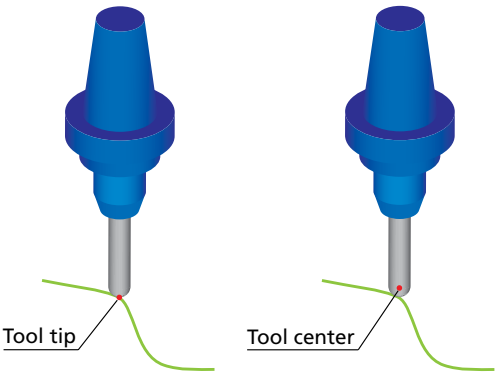

This option is available only when the tool of the **Ball nose mill** or **Bull nose mill** type is chosen for the operation. The location of the **Tool center** is assumed at the corner radius center point level.

6.3.4 Round corners

In some cases, the HSS tool path contains unnecessary fish tail movements in sharp corners or in small radius areas.

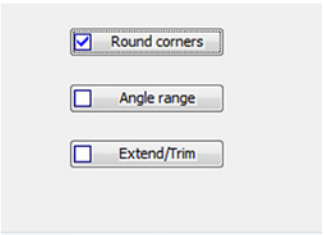

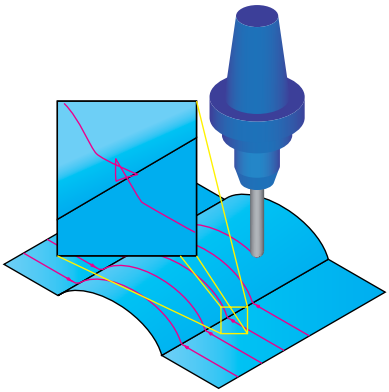

Using the **Round corners** option, you can avoid such movements and generate a smoother tool path.

The **Round corners** button displays the **Round corners by tool radius** dialog box. This dialog box enables you to define the rounding of the tool path.

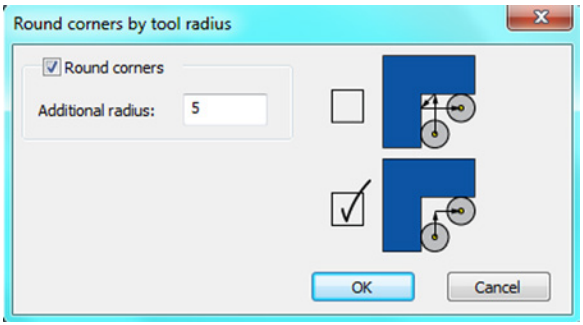

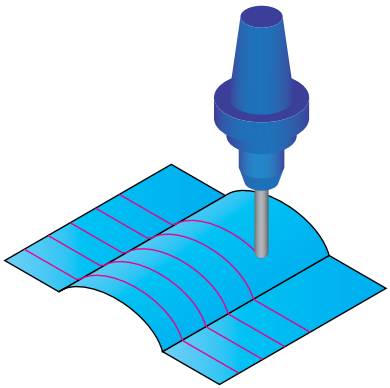

The rounding is performed in the direction of passes with a radius equal to the sum of the tool corner radius and the specified **Additional radius** value.

6.3.5 Angle range

SolidCAM enables you to define the cutting area by the surface inclination angle.

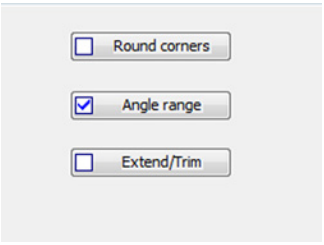

The **Angle range** button displays the **Parameters to Define Shallow and Steep Areas** dialog box. This dialog box enables you to define parameters determining the steep/shallow area to be machined.

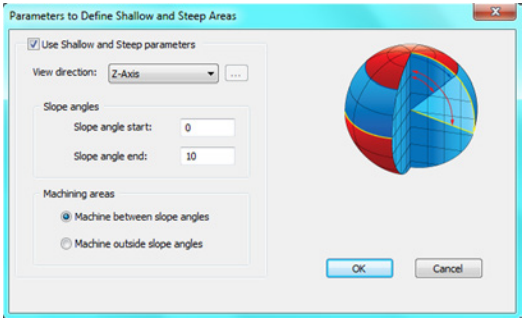

View direction

SolidCAM enables you to define a vector from where the slope angle start and end are referenced. SolidCAM enables you to choose one of the Coordinate System axes (X-axis, Y-axis and Z-axis) or define a vector by an end point (the start point is automatically considered to be located in the Coordinate System origin).

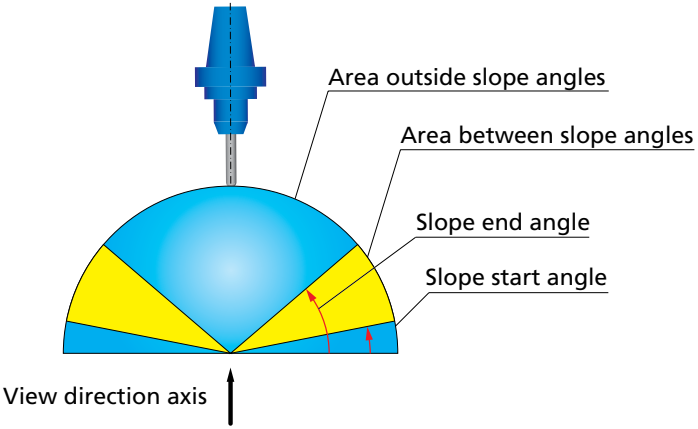

Slope angles

The **Slope angle start** and **Slope angle end** parameters define the limit angles around the **View direction** vector.

Machining areas

This option enables you to determine the area to be machined.

When the **Machine between slope angles** option is chosen, the machining is performed only at surfaces with inclination angles within the range defined by **Slope start** and **Slope end** angles.

When the **Machine outside slope angles** option is chosen, the machining is performed only at surfaces with inclination angles outside the range defined by **Slope start** and **Slope end** angles.

Note that the cutting area calculation is purely based on surface contact points. In other words, some portions of the surface geometry are virtually trimmed in order to split the part into shallow and steep regions.

6.3.6 Extend/Trim

SolidCAM enables you to extend or trim the tool path tangentially along cuts. SolidCAM virtually extends or trims the drive surface tangentially and generates the tool path for it. In case of extending tool path, the tool moves to the specified distance beyond the end of the surface. In case of tool path trimming, the tool stops at the specified distance before the surface boundary and moves to the next cut.

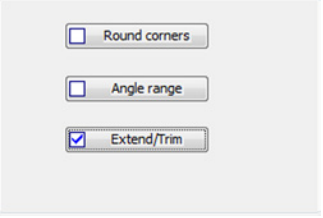

The **Extend/Trim** button displays the **Extend/Trim** dialog box. This dialog box enables you to define the extending/trimming distances.

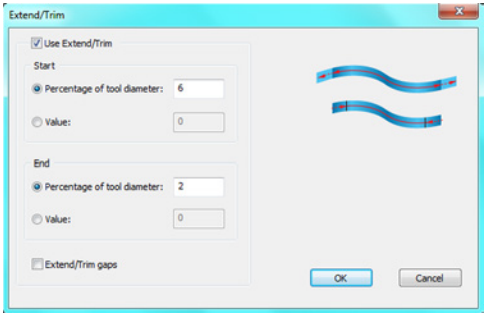

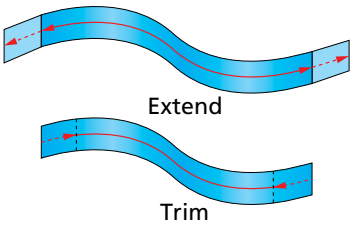

- The **Start** section enables you to define the extending/trimming distance for the start of the cutting passes.
- The **End** section enables you to define the extending/trimming distance for the end of the cutting passes.

The distances can be defined either by values or by the percentage of the tool diameter. A positive value means extending of the passes; a negative value means trimming of the passes.

Note that with the **Zigzag** option (see topic **6.2.1**) the direction of the machining is changed for each cutting pass, so the start and the end of the passes are reversed for each pass. Therefore, to obtain the correct tool path, it is recommended to use the **One way** option. With this option, the start points of the passes are on one side of the drive surface and the end points are on the other side, providing you with the possibility of correct extending/trimming.

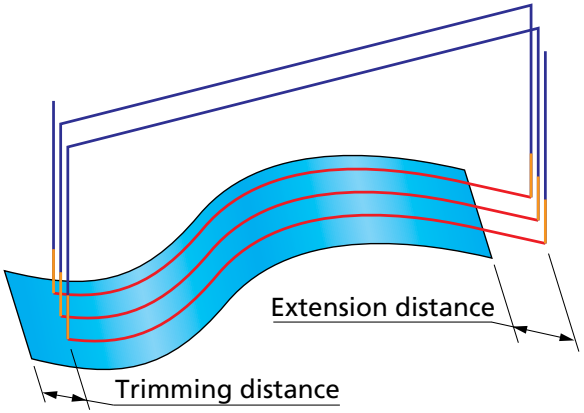

Extend/trim gaps

Selecting this check box enables you to apply the defined extending/trimming to all gaps detected along cutting passes during the tool path linking. In the gap area, the drive surface is virtually extended or trimmed tangentially by the distance specified in the **Start/End** sections. When the distance value is positive, the drive surface is extended; in case of a negative value it is trimmed.

- When extending is applied to the detected gaps, the tool continues its move to the specified distance beyond the end of the surface, then performs linking in the gap area according to the parameters set in the **Gaps along cut** section of the **Link** page (see topic **8.2.1**), then continues the machining of the current cut at the specified distance before the second edge of the gap. As a result, the tool path is extended over the gap area at both sides.

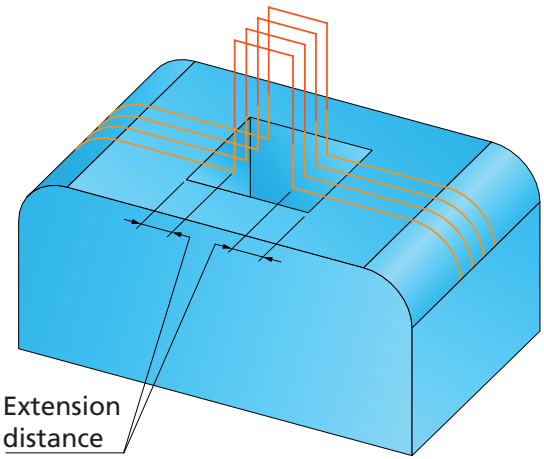

- When trimming is applied to the detected gaps, the tool stops at the specified distance before the gap edge, performs linking in the gap area according to the parameters set in the **Gaps along cut** section of the **Link** page, and continues the machining of the current cut at the specified distance after the second edge of the gap. As a result, the tool path is trimmed over the gap area at both sides.

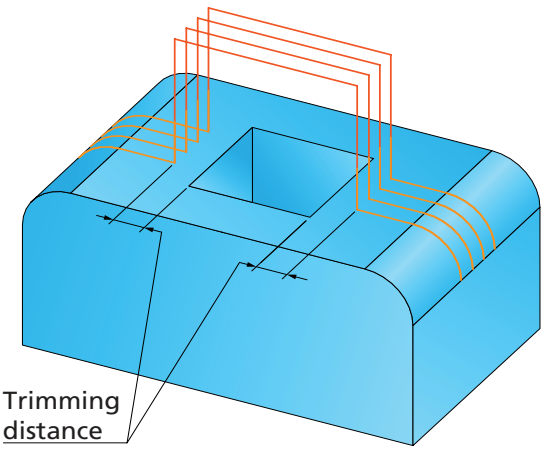

Tool Control

7

The **Tool control** page enables you to define the parameters that control the tool contact point with respect to the workpiece/part.

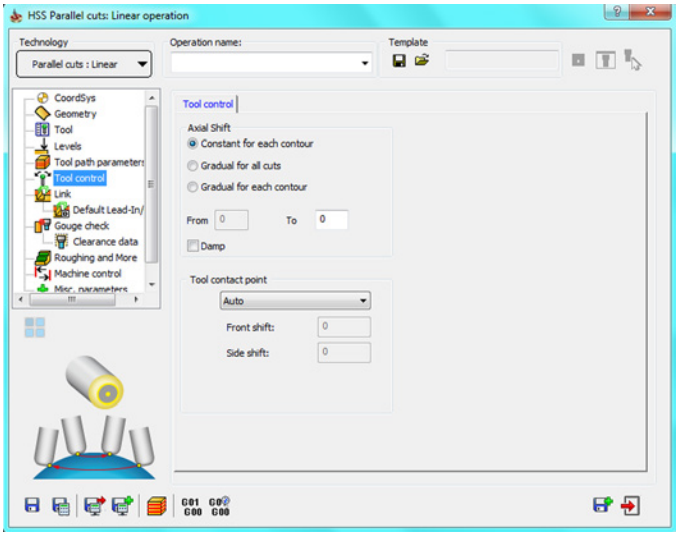

7.1 Axial Shift

SolidCAM enables you to offset the tool along the tool axis.

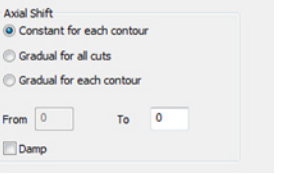

You can choose one of the following options:

- **Constant for each contour**

  The offset value does not change along the axis. The value is set in the **To** field.

- **Gradual for all cuts**

  The contact point between the tool and work piece gradually shifts along the axis with each consecutive cut. The offset increases from the value set in the **From** field up to the value set in the **To** field.

- **Gradual for each contour**

  The contact point between the tool and work piece slides gradually for each cut. The offset increases from the value set in the **From** field up to the value set in the **To** field.

Damp

This option enables you to smooth the tool path in such a manner that vertical jumps will be avoided.

When this check box is not selected, the resulting tool path exactly follows the defined edge curve.

When this check box is selected, the tool path is smoothed, and therefore does not contain sharp jumps.

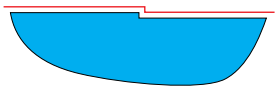

Damp check box is not selected

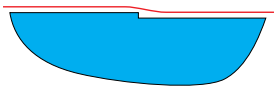

Damp check box is selected

7.2 Tool contact point

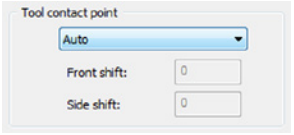

The **Tool contact point** section enables you to define the point on the tool surface that contacts with the drive surfaces during the machining.

Auto

SolidCAM automatically defines the tool contact point. The tool contact point moves from the tool tip to tool center maintaining tangency between the tool and a XY-plane level.

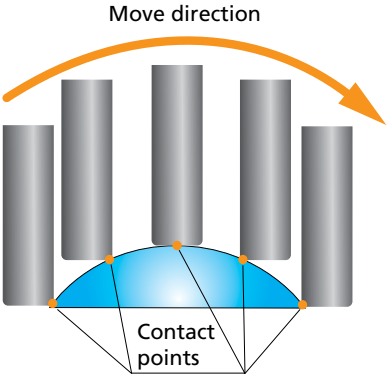

At Center

The tool contact point is located at the tool center (tool tip).

Note that with this option the tool is not located tangentially to the drive surface. Use the **Gouge checking** options (see chapter **9**) to avoid possible gouges.

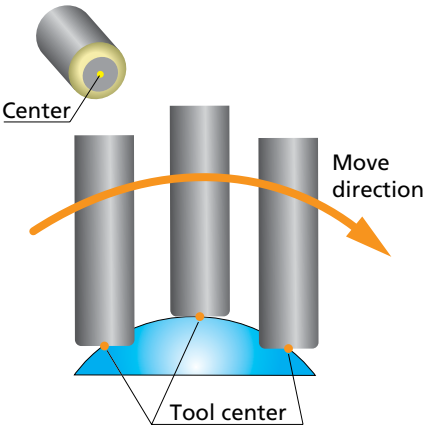

At Radius

The tool contact point is automatically determined at the tool corner radius area; the tool tip is not in contact with the drive surface.

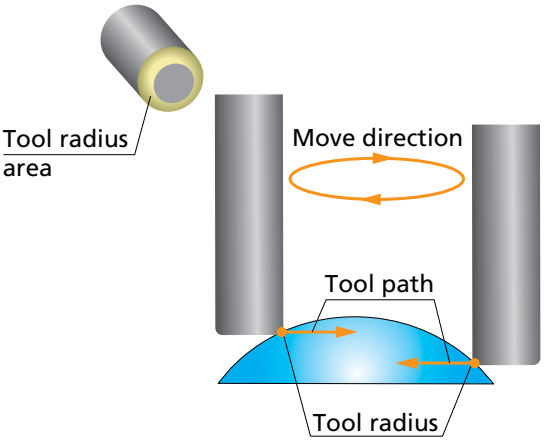

At Front

The tool contact point is located at the beginning of the tool corner radius (for bull nosed tools) in the direction of the tool movement. It is recommended to use the **Gouge checking** options (see chapter **9**) to avoid possible gouges.

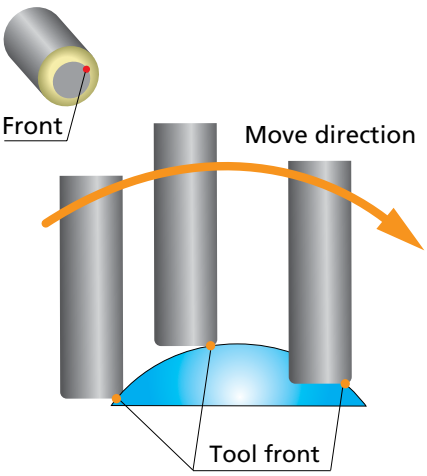

At user-defined point

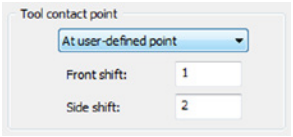

SolidCAM enables you to define the contact point between tool and drive surface by the tool center shifting; the shifting is defined by two parameters:

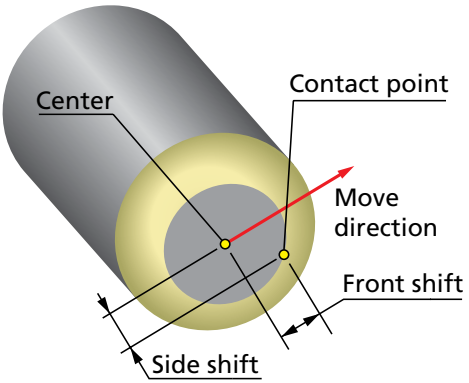

- **Front shift**

  This parameter enables you to define the shift of the contact point at the tool motion direction. With a positive value specified, the contact point moves from tool center in the tool motion direction.

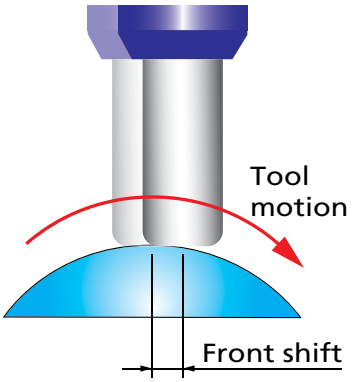

- **Side shift**

  This parameter enables you to define the shift of the contact point in the direction perpendicular to that of the tool motion. With a positive value specified, the tool center moves to the right side (relative to the tool motion direction) and the contact point moves from the tool center to the left side.

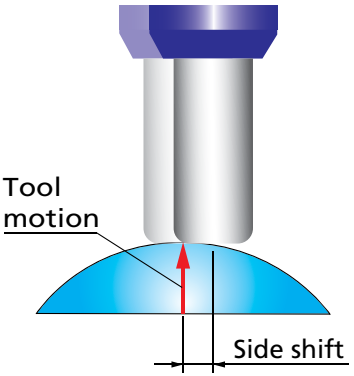

Link 8

The **Link** page enables you to define the approach/retract of the tool and linking of HSS passes into the complete tool path.

8.1 Approach/Retract

This tab enables you to define the parameters of tool approach and retraction performed in the HSS operation.

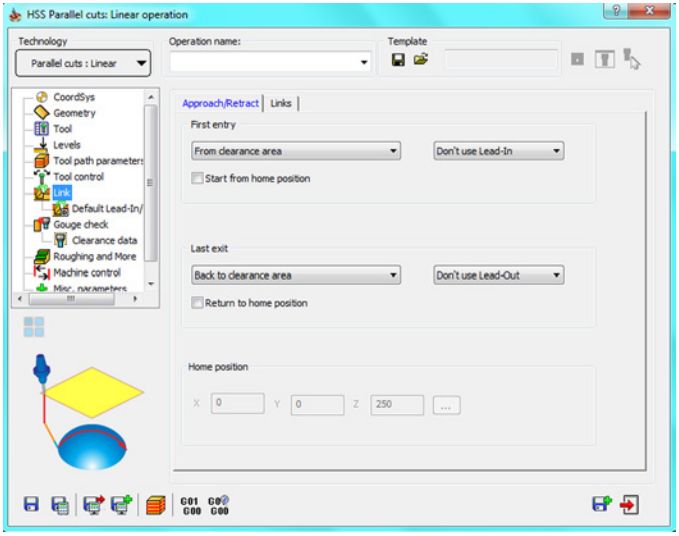

8.1.1 First entry

The **First entry** section enables you to define the first approach of the tool to the cutting area.

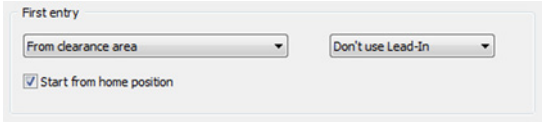

SolidCAM enables you to specify the level from which the approach movement is started. The following options are available:

- **Direct**

  When this option is chosen, the machining is started directly in the first point of the tool path. No approach movement is performed.

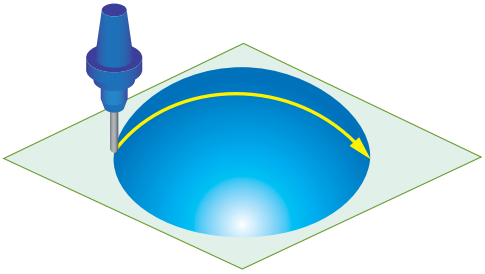

- **From clearance area**

  The approach movement is performed from the specified **Clearance area** (see topic **5.1.1**), through the **Retract distance** and **Safety distance** levels (see topic **5.1.2**).

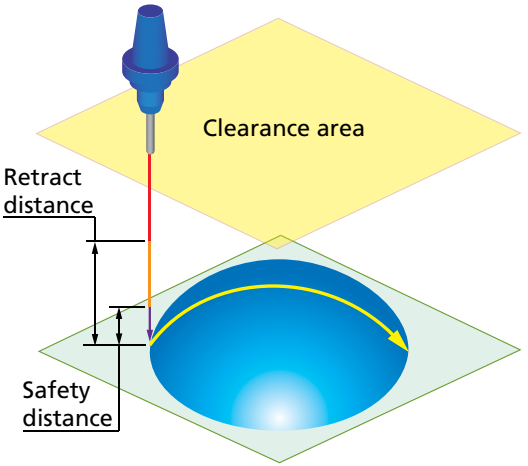

- **Use retract distance**

  The approach movement is performed from the **Retract distance** level.

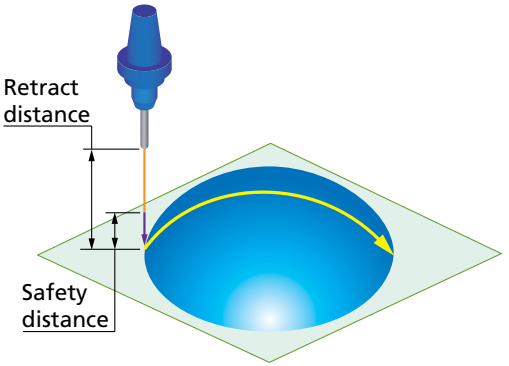

- **Use safety distance**

  The approach movement is performed from the **Entry safety distance** level.

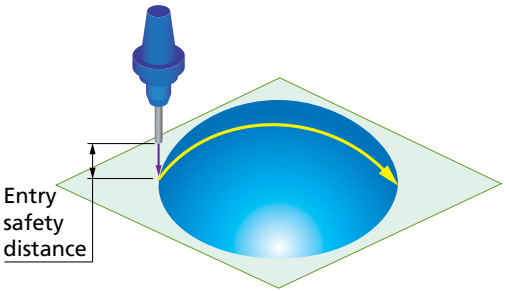

SolidCAM enables you to use the defined **Lead In** options (see topic **8.3**) for the first entry definition.

Start from home position

SolidCAM enables you to define the **Home position** for tool path linking that can be applied to the first entry links. Home position is a point from which the first rapid movement of the tool starts during the approach.

When the **Start from home position** check box is selected, the machining is performed as follows:

The tool is positioned at the specified **Home position**, then it performs its initial rapid movement to the **Clearance area**/**Retract distance**/**Safety distance** level or to the start point of the first cutting pass (depending on the First entry setting). From that point it performs the approach movement to the drive surface (or directly starts machining the surface if the **Direct** option was chosen for **First entry**).

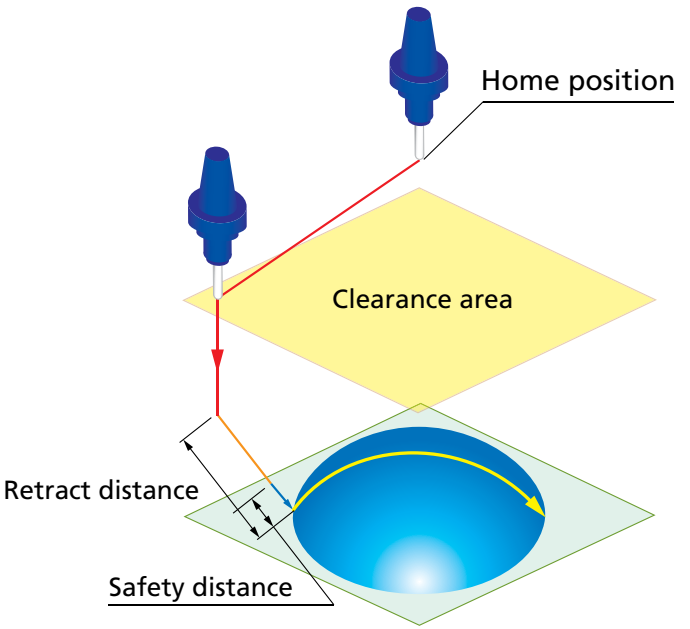

8.1.2 Last exit

The **Last exit** section enables you to define the last retreat of the tool from the cutting area after the machining.

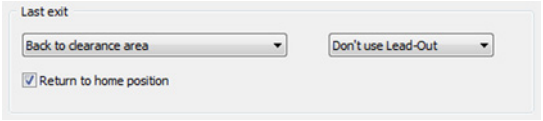

SolidCAM enables you to specify the level to which the retreat movement is performed. The following options are available:

- **Direct**

  When this option is chosen, the machining is finished directly in the last point of the tool path. No retreat movement is performed.

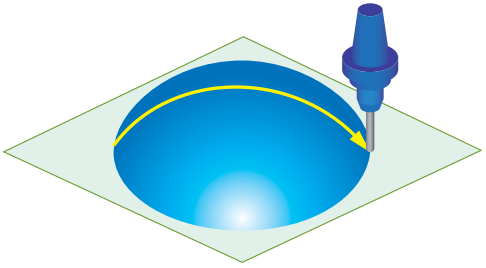

- **Back to clearance area**

  The retreat movement is performed back to the specified **Clearance area** (see topic **5.1.1**), through the **Retract distance** and **Exit safety distance** levels (see topic **5.1.2**).

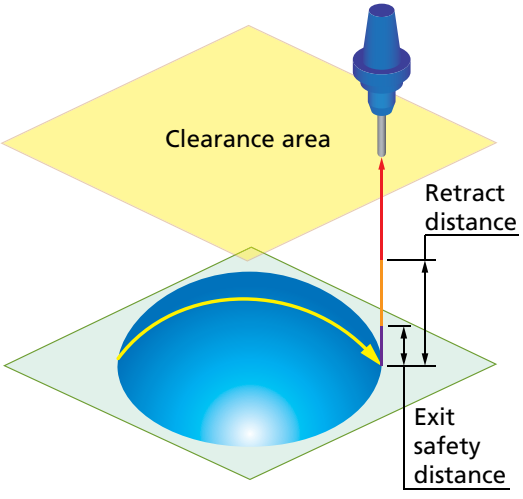

- **Use retract distance**

  The retreat movement is performed to the **Retract distance** level.

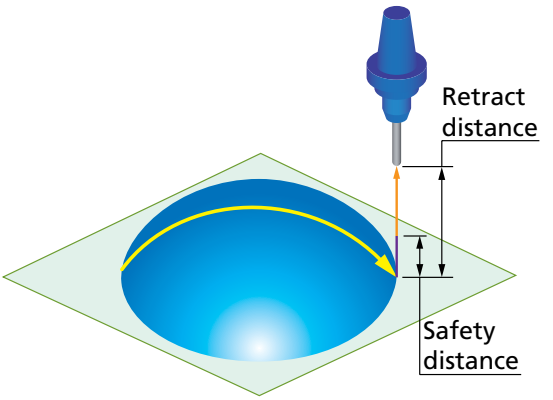

- **Use safety distance**

  The retreat movement is performed to the **Exit safety distance** level.

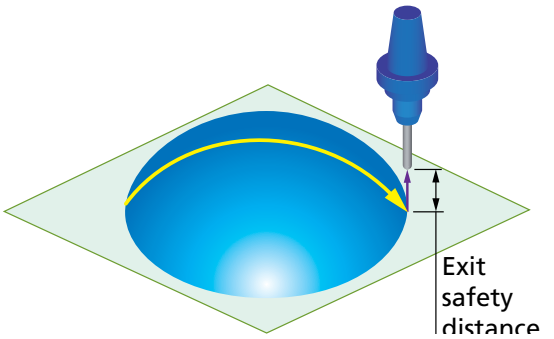

- **Back to clearance through tube center**

  This option is useful in case of port and tubular parts machining. The idea is to enable the tool to exit from the machined part through the tube center outwards.

  When this option is chosen, the tool retreats from the interior of the machined tubular part through its center up to the clearance area level.

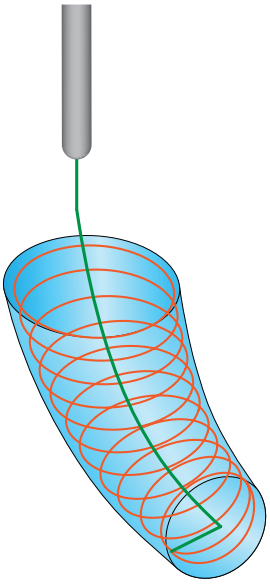

SolidCAM enables you to use the defined **Lead Out** options (see topic **8.3**) for the last exit definition.

Return to home position

SolidCAM enables you to define the **Home position** for tool path linking that can be applied to the last exit links. **Home position** is a point to which the tool eventually returns after the retreat.

When the **Return to home position** check box is selected, the machining is performed as follows: after the last cutting pass, the tool returns to the **Clearance area**/**Retract distance**/**Exit safety distance** level (depending on the **Last exit** setting) or directly to the **Home position** (in case of the **Direct** option chosen for **Last exit**).

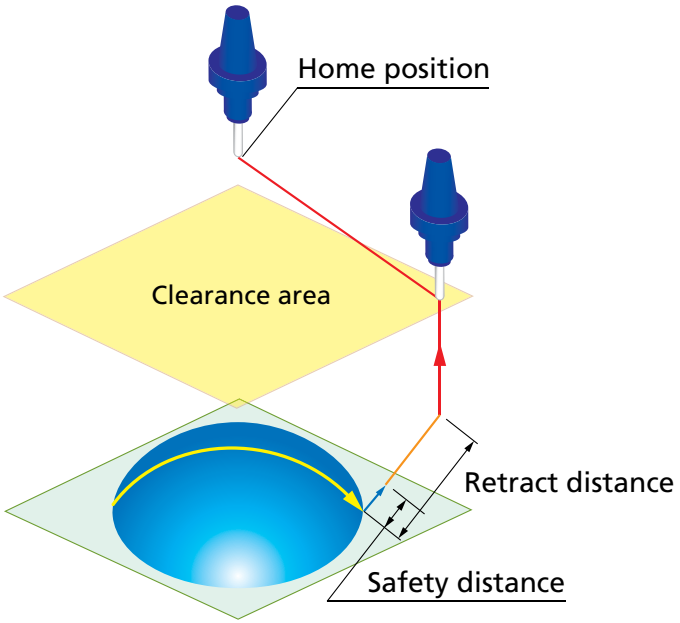

8.1.3 Home position

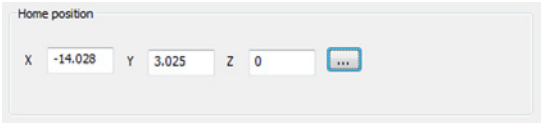

This section enables you to define the coordinates of the home position.

This section is available when the **Start from home position** and/or the **Return to home** position check box is selected.

8.2 Links

This tab enables you to define the parameters of tool path linking performed in the HSS operation.

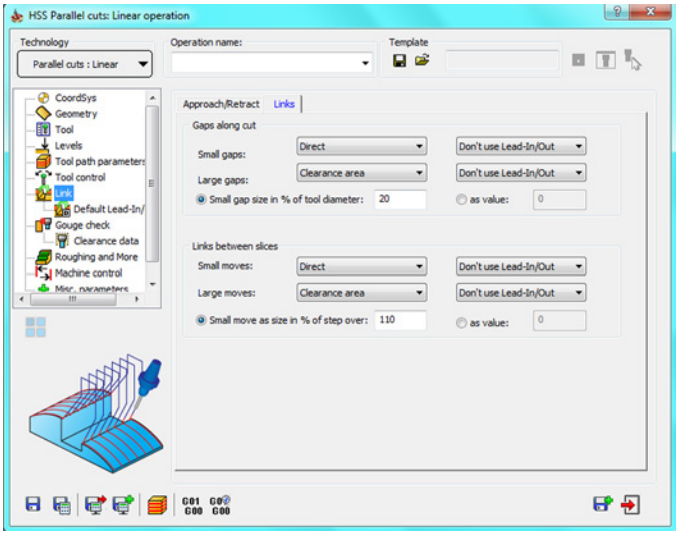

8.2.1 Gaps along cut

During the tool path linking, SolidCAM detects gaps along the cutting passes. The **Gaps along cut** section enables you to define how the tool moves in such gap areas.

SolidCAM enables you to define different ways of movements in gap areas of different sizes. Depending on the size of the gap, it is possible to choose two different options for large and small gap areas. The maximum size for gaps to be considered as small can be specified either as a percentage of the tool diameter using the **Small gap size in % of tool diameter** parameter or by a **Value**.

The following types of movements are available, both for small gaps and for large gaps:

- **Direct**

  The tool moves in the shortest way to the other side of the gap, without any retracting movements. The tool path in the gap area is performed by a straight line; the tool moves with the cutting feed rate.

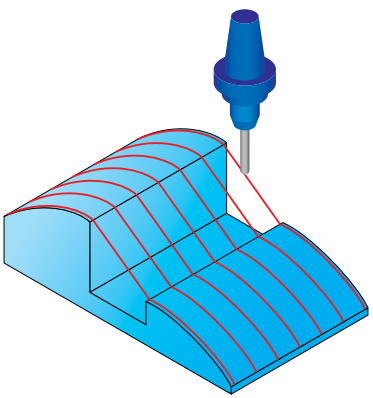

- **Safety distance**

  When the gap area is detected, the tool performs a retract movement in the tool axis direction to the **Safety distance**. From this point the tool moves directly to the **Safety distance** of the next segment of the pass. All the tool movements are performed with a cutting feed rate.

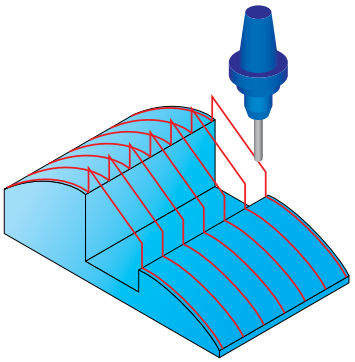

- **Clearance area**

  When the gap area is detected, a link movement between the pass segments is performed through the **Clearance area**. All the movements above the **Safety distance** are performed with the rapid feed rate. All the movements below the **Safety distance** are performed with the specified cutting feed rate.

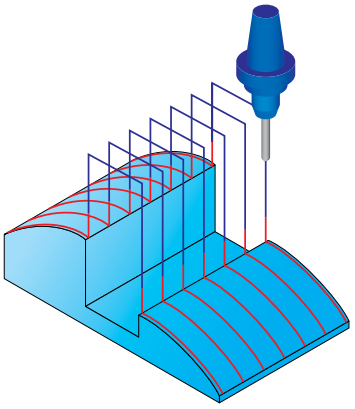

- **Follow surfaces**

  In the gap area, the tool follows the drive surface geometry. Along the connection movement, SolidCAM tries to maintain tangency between the pass segments; when it is not possible, SolidCAM maintains tangency only for the first pass segment.

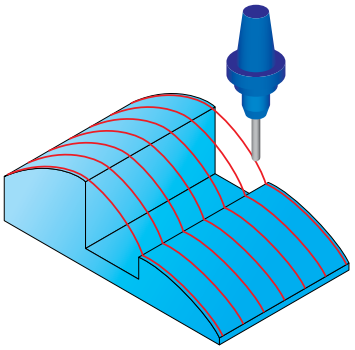

- **Blend spline**

  SolidCAM connects the pass segments with a spline tangential to both segments.

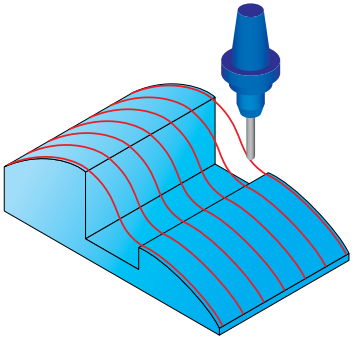

- **Safety distance and rapid**

  When the gap area is detected, the tool performs a retract movement in the tool axis direction to the **Retract distance**. From this point the tool moves directly to the **Retract distance** of the next segment of the pass. All the tool movements below the **Safety distance** are performed with a cutting feed rate. All the movements above the **Safety distance** are performed with the rapid feed rate.

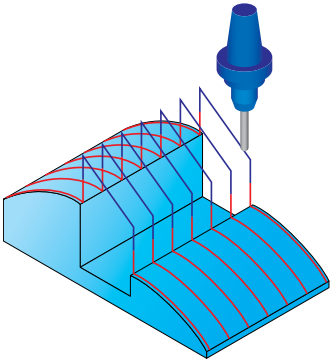

- **Follow Stock**

  When a gap area is detected, the tool performs a retract movement to the stock upper level and makes a link at the upper level height.

SolidCAM enables you to use pre-defined **Lead-In**/**Lead-Out** strategies (see topic **8.3**) to perform the movements between segments of a pass divided by a gap.

- **Use Lead-In**

  SolidCAM performs the approach movement to the drive surface after the gap using the specified **Lead-In** options.

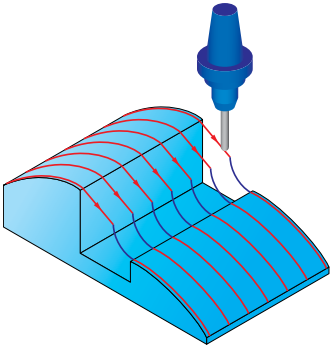

- **Use Lead-Out**

  When a gap is detected, SolidCAM performs the retreat movement using the specified **Lead-Out** options.

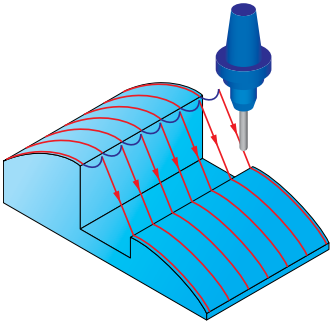

- **Use Lead-In/Out**

  SolidCAM performs the approach movement to the drive surface after the gap using the specified **Lead-In** options and performs the retreat movement using the specified **Lead-Out** options.

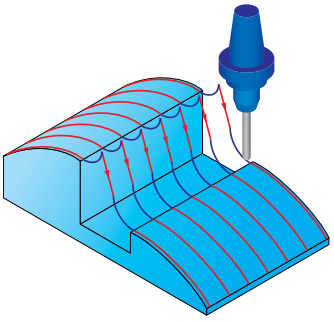

8.2.2 Links between slices

The **Links between slices** option enables you to define how the tool moves between cutting slices.

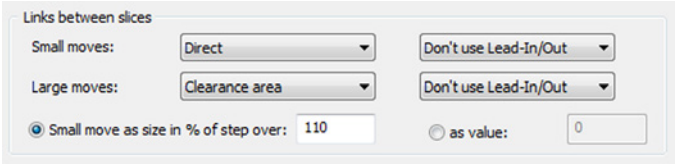

Machining is performed in slices when all the roughing and finishing offsets of the current cutting level are performed before moving to the next cutting level.

SolidCAM enables you to define different ways of movements between slices spaced with different **Maximum step over** (see topic **6.1.2**). Depending on the **Maximum step over** value, it is possible to choose two different options for large and small movements between slices. The maximum size for movement to be considered as small can be specified either as a percentage of the **Maximum step over** using the **Small move as size in % of step over** parameter or by a **Value**.

The following types of movements are available both for small and large movements:

- **Direct**

  The tool moves in the shortest way to the next slice, without any retracting movements. The linking is performed by a straight line; the tool moves with the cutting feed rate.

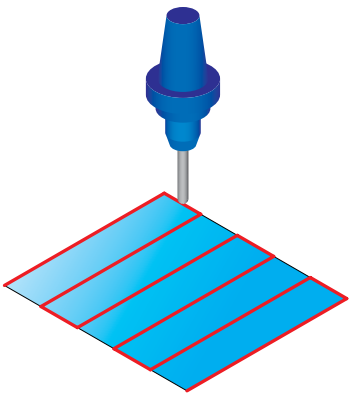

- **Safety distance**

  The tool performs a retract movement in the tool axis direction to the **Safety distance**. From this point the tool moves directly to the **Safety distance** of the next slice. All the tool movements are performed with the cutting feed rate.

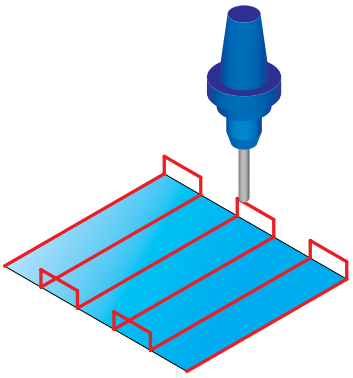

- **Clearance area**

  The link movement between slices is performed through the **Clearance area**. All the movements above the **Safety distance** are performed with the rapid feed rate. All the movements below the **Safety distance** are performed with the specified cutting feed rate.

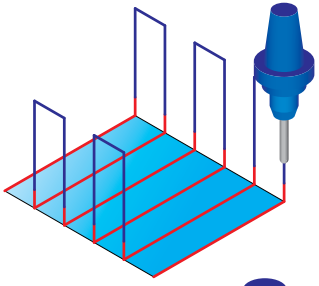

- **Follow surfaces**

  The tool follows the drive surface geometry.

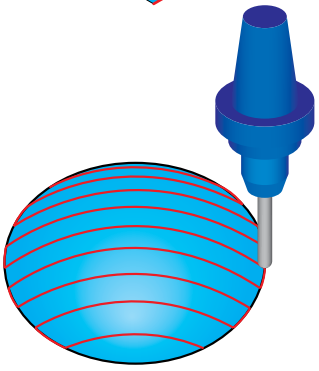

- **Blend spline**

  SolidCAM connects the slices with a spline tangential to both of them.

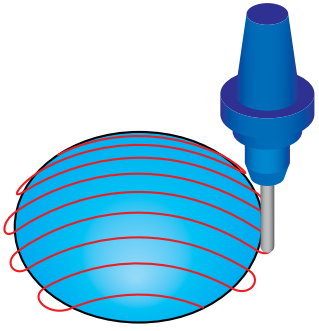

- **Safety distance and rapid**

  The tool performs a retract movement in the tool axis direction to the **Retract distance**. From this point the tool moves directly to the **Retract distance** of the next slice. All the tool movements below the **Safety distance** are performed with the cutting feed rate. All the movements above the **Safety distance** are performed with the rapid feed rate.

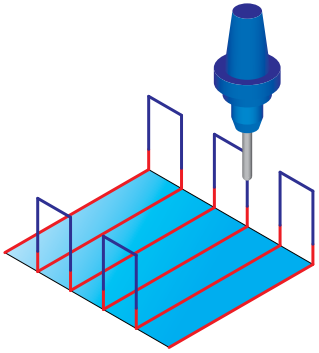

- **Follow Stock**

  When a gap area is detected, the tool performs a retract movement to the stock upper level and makes a link at the upper level height.

SolidCAM enables you to use pre-defined **Lead-In**/**Lead-Out** strategies (see topic **8.3**) to perform the movements between slices.

- **Use Lead-In**

  SolidCAM performs the approach movement to the drive surface after the gap using the specified **Lead-In** options.

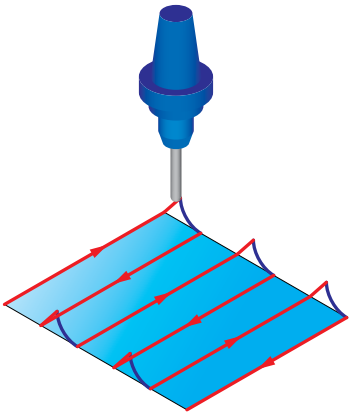

- **Use Lead-Out**

  When a gap is detected, SolidCAM performs the retreat movement using the specified **Lead-Out** options.

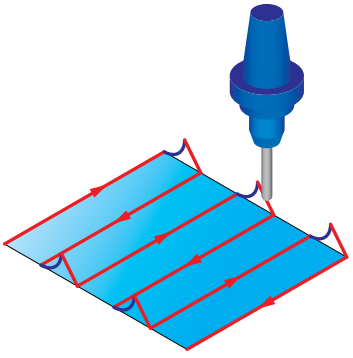

- **Use Lead-In/Out**

  SolidCAM performs the approach movement to the drive surface after the gap using the specified **Lead-In** options and performs the retreat movement using the specified **Lead-Out** options.

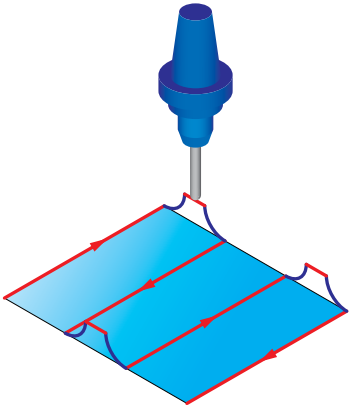

- **Don't use Lead-In/Out**

  When this option is chosen, no links are applied.

8.3 Default Lead-In/Out

The **Lead-In/Out** parameters sections of the **Default Lead-In/Out** page enable you to define the parameters used for the approach/retreat movements.

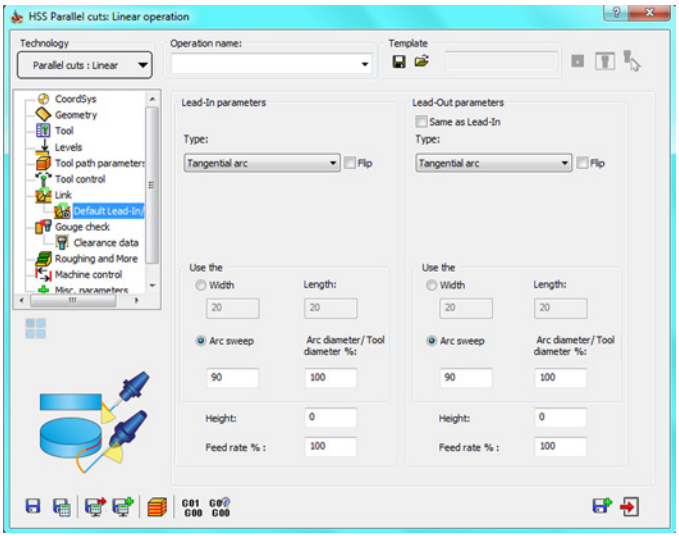

8.3.1 Type

SolidCAM enables you to choose one of the following types for the approach/retreat movements:

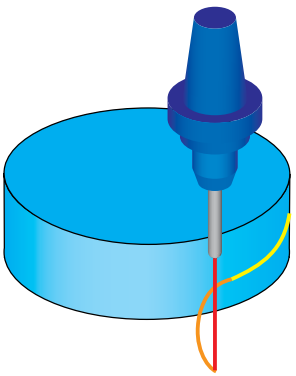

- **Tangential arc**

  The approach/retreat movement is performed with an arc tangential to the drive surface. The approach/retreat arc is generated in the plane orthogonal to the tool axis.

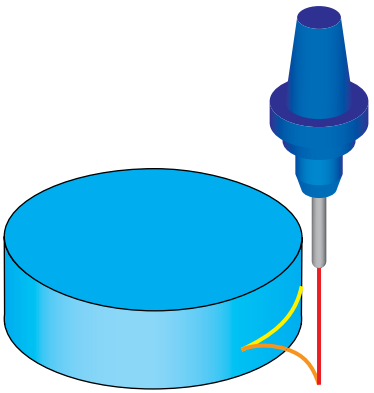

- **Reverse tangential arc**

  The approach/retreat movement is performed with an arc tangential to the drive surface, like the **Tangential arc** option, but with the direction of the approach/retreat arc reversed. The approach/retreat arc is generated in the plane orthogonal to the tool axis.

- **Vertical tangential arc**

  SolidCAM performs the approach/retreat movement with an arc tangential to the drive surface located in the plane of the tool axis.

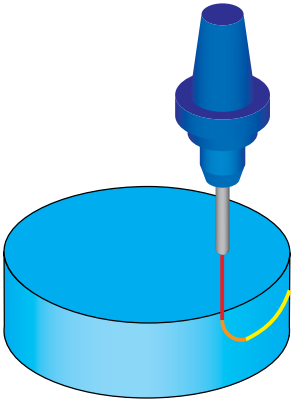

- **Reverse vertical tangential arc**

  SolidCAM performs the approach/retreat movement with an arc tangential to the drive surface located in the plane of the tool axis, similar to the Vertical tangential arc option, but the direction of the approach/retreat arc is reversed.

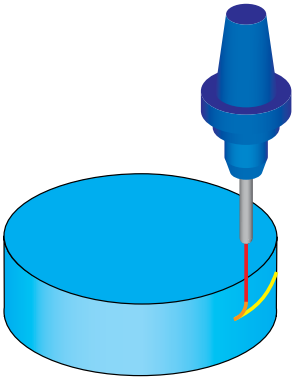

- **Horizontal tangential arc**

  SolidCAM performs the approach/retreat movement with an arc tangential to the drive surface located in the plane of the cutting movement.

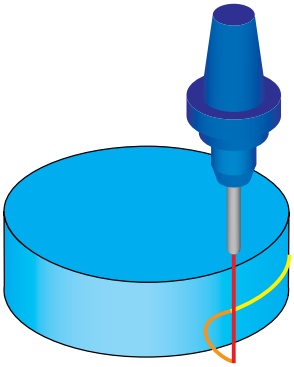

- **Orthogonal arc**

  SolidCAM performs the approach/retreat movement with an arc orthogonal to the cutting pass located in the plane perpendicular to the tool axis.

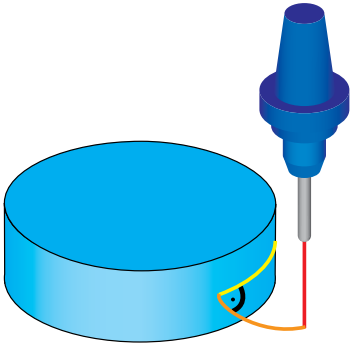

- **Tangential line**

  SolidCAM performs the approach/retreat movement with a line tangential to the cutting pass.

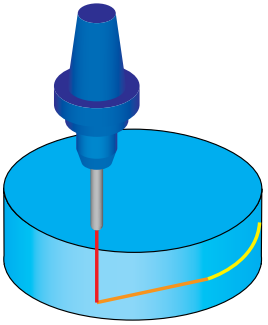

- **Reverse tangential line**

  SolidCAM performs the approach/retreat movement with a line tangential to the cutting pass similar to the **Tangential line** option, but the direction of the approach/retreat line is reversed.

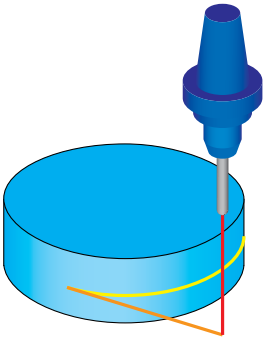

- **Orthogonal line**

  SolidCAM performs the approach/retreat movement with a line orthogonal to the cutting pass.

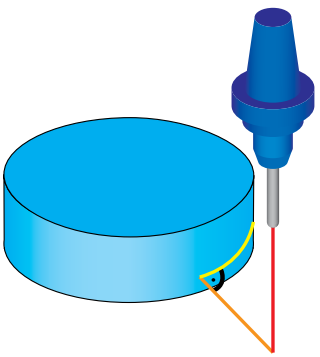

- **Vertical profile ramp**

  SolidCAM allows the lead to follow the tool path contour shape till it reaches a specified length and height. The ramp direction is along the cutting direction.

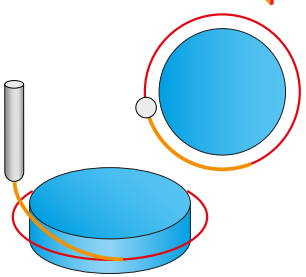

- **Reverse vertical profile ramp**

  SolidCAM allows the lead follow the tool path contour shape till it reaches a specified length and height. The ramp direction is opposite to the cutting direction.

Flip

This option is useful when regular approach/retreat by arc is obstructed by part or fixture geometry and therefore will result in a collision between the tool and the machined workpiece. The defined approach/retreat arc can be flipped to ensure unobstructed access to the drive surface (and/or unobstructed exit in the end of machining).

When this check box is selected, the lead move is flipped to the opposite side from its initial orientation, as if it was mirrored relative to the tool path.

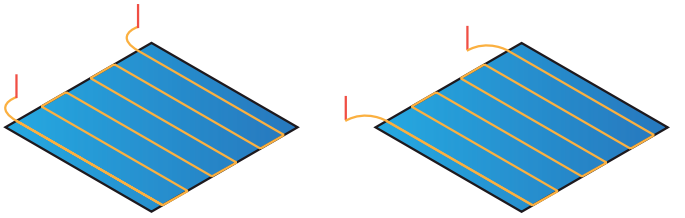

Flip check box is not selected Flip check box is selected

8.3.2 Approach/retreat parameters (Use the...)

This section enables you to define the dimensions of the approach/retreat arc or line.

Width/Length

In this section, SolidCAM enables you to define the approach/retreat arc or line by the width and length parameters.

The **Width** and **Length** parameters define the bounding rectangle surrounding the arc. The defined arc has a 90° sweep.

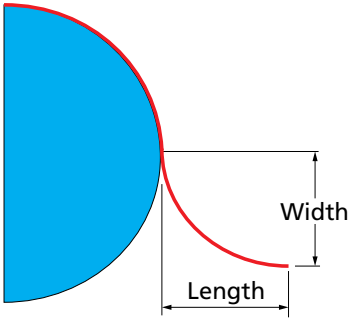

Arc sweep/Arc diameter

SolidCAM enables you to specify the diameter of the approach/retreat arc using the percentage of the **Arc diameter** to the **Tool diameter**.

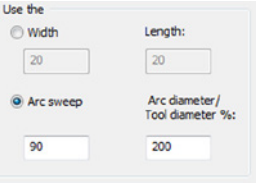

For example, when a tool with the diameter of 10 mm is used and the percentage parameter is set to 200%, the resulting approach/retreat arc diameter is 20 mm.

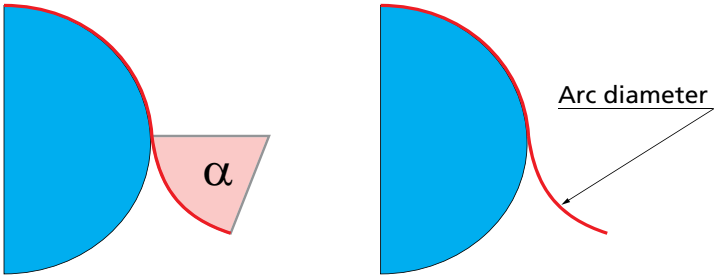

The **Arc sweep** parameter enables you to define the angle of the approach/retreat arc segment.

Fillet/Length

In this section, SolidCAM enables you to create a fillet with a specified radius between the line and the contour.

This option is available only if the chosen approach/retreat type is **Tangential line**, **Reverse tang. line**, **Orthogonal line**, **Vertical profile ramp**, and **Reverse vertical profile ramp**.

8.3.3 Height

This parameter enables you to define the incremental height of the first point of the approach/retreat movement. When the approach movement is performed with a line, the **Height** parameter enables you to perform inclined ramp approach. When the approach movement is performed with an arc, the **Height** parameter enables you to perform an helical approach.

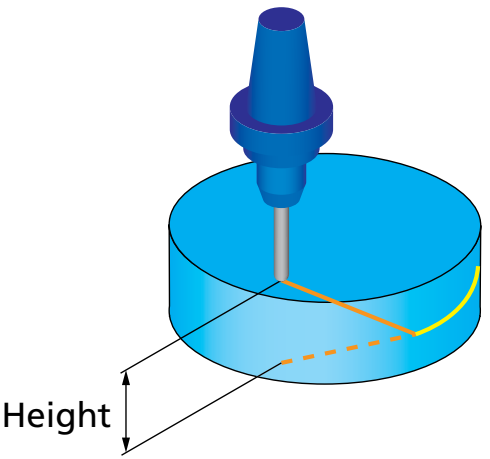

8.3.4 Feed rate

This parameter enables you to define the feed rate (see topic **4.1.2**) for the approach/retreat movement.

8.3.5 Same as Lead-In

The **Same as Lead-In** option enables you to use the defined **Lead-In** strategy for the **Lead-Out** definition.

Gouge Check 9

The **Gouge check** page enables you to automatically detect and avoid the possible collisions between the tool (with the tool holder) and the workpiece.

9.1 Gouge checking

SolidCAM enables you to define four different sets of gouge checking parameters. In each set you have to choose components of the tool holding system and model faces to check the possible collisions between them. You also have to define the strategy how to avoid the possible collisions. Combining these sets, SolidCAM enables you to choose different strategies for avoiding the different types of possible collisions.

Select the **Enable/Disable** check box to activate a set of gouge checking parameters.

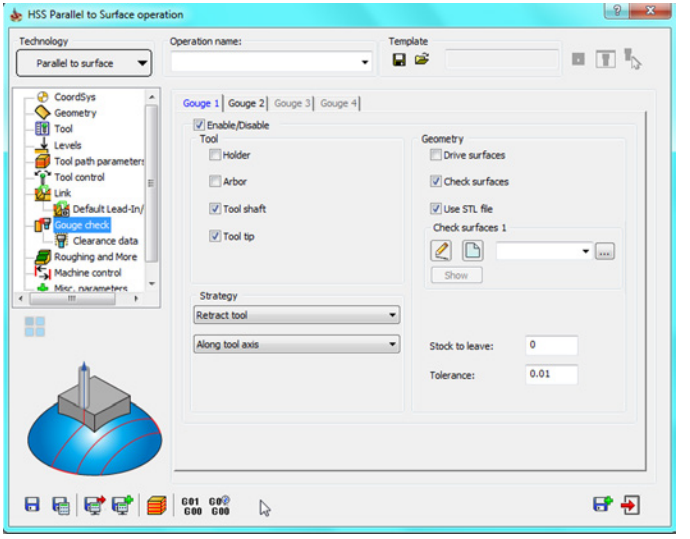

9.1.1 Tool

This section enables you to choose both tool and tool holding system components to perform the gouge check for them. The following parts of the components are available for the gouge check:

- **Holder**
- **Arbor** (shank)
- **Tool shaft** (between flute length and arbor)
- **Tool tip** (flute length)

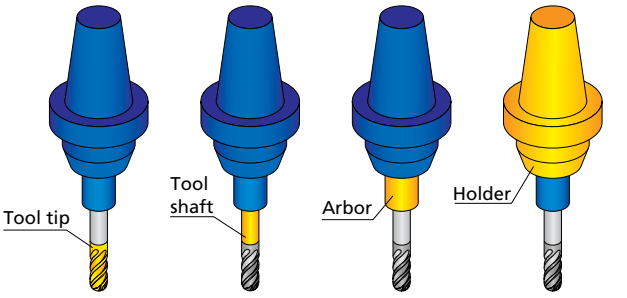

9.1.2 Geometry

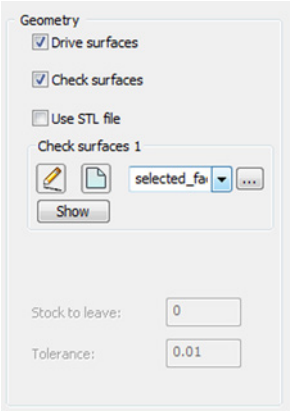

The **Geometry** section enables you to choose the model faces for which the gouge checking is performed.

Drive surfaces

When this option is chosen, SolidCAM performs the gouge checking for the **Drive surfaces** (see topic **3.1.1**), avoiding the possible collisions.

Check surfaces

With this option, SolidCAM enables you to choose a number of non-drive surfaces on the model as the check surfaces and perform the gouge checking for them.

The **Check surfaces** section enables you either to choose the check surfaces geometry from the list or define a new one with the button displaying the **Select Faces** dialog box.

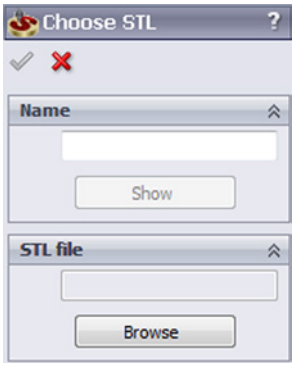

When the **Use STL file** check box is activated, the **Check surfaces** section enables you to choose a check surfaces geometry from an STL file. The button enables you to display the **Choose STL** dialog box.

The **Browse** button in the dialog box enables you to choose the necessary STL file. The full name (including the path) of the chosen STL file is displayed in the **STL file** edit box. The **Show** button enables you to display the chosen STL triangles in a separate window.

When only the **Check surfaces** option is chosen, SolidCAM enables you to define two additional parameters:

- **Stock to leave**. This parameter enables you to define an allowance for the check surfaces. The tool will reach the check surface by the specified value. For example, if the **Stock to leave** value is set to 1, SolidCAM checks that the tool is kept away from check surfaces by 1 mm.

This parameter is used only in case when only the **Check surfaces** option is chosen for the gouge checking (the **Drive surfaces** option is not chosen). In case when both **Drive surface** and **Check surface** options are turned on, SolidCAM uses **Drive surface offset** value (see topic **3.1.1**) to define the machining allowance for both drive and check surfaces.

- **Tolerance**. This parameter enables you to define the accuracy of the gouge checking for the check surfaces. The value defines the chordal deviation between the tool path and the check surfaces.

This parameter is used just in cases when only the **Check surfaces** option is chosen for the gouge checking (**Drive surfaces** option is not chosen). In cases when both **Drive surface** and **Check surface** options are turned on, SolidCAM uses **Cut tolerance** value (see topic **6.1.1**) to define the gouge checking tolerance for both drive and check surfaces.

9.1.3 Strategy

SolidCAM provides you with a number of strategies enabling you to avoid possible gouges.

Retract tool

When this option is chosen, SolidCAM enables you to avoid the possible collisions by retracting the tool. When a possible collision is detected, the tool performs a retract movement at the automatically calculated distance and then "flows" around check faces avoiding the gouge. The initial gouging tool path is substituted with a new one free of gouges.

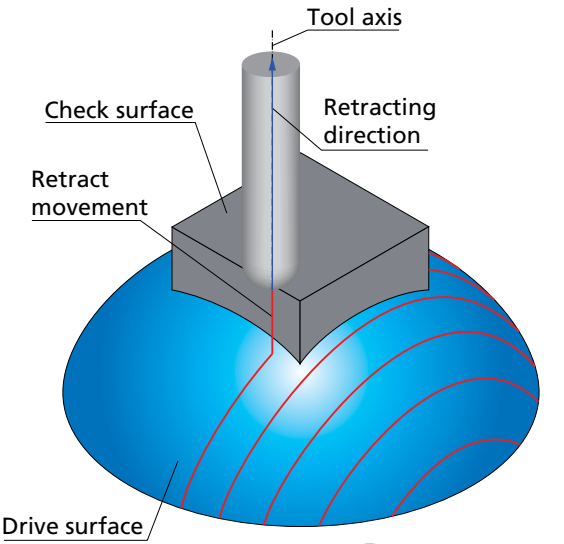

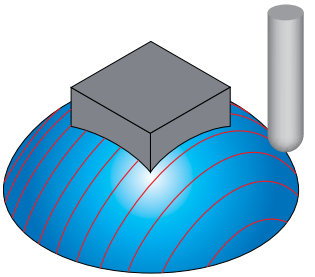

Initial tool path gouging the check surfaces

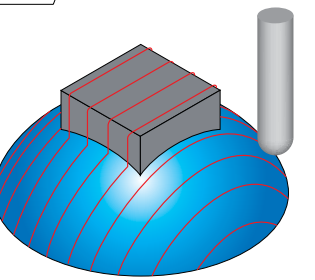

Updated tool path not gouging the check surfaces

Advanced

SolidCAM provides you with advanced parameters for projection of the tool path from the drive surface plane onto the model to be machined.

In certain machining cases, it is convenient to define the required tool path on a flat surface, which facilitates the definition of parameters such as distance between cuts, machining angle that is set in the XY-plane, etc. Then this tool path can be projected onto a 3D model that needs to be machined.

Consider the example of the following part: all of its surfaces need to be machined in simple parallel cuts. Instead of selecting all of its faces as drive faces to process the tool path on, you can create a new flat surface, on which the tool path will be defined. This surface will be defined as the drive surface, to which the actual tool path will be applied. You can easily check the resulting tool path on the flat surface, edit if necessary, and then to project it onto the faces of the model to be machined. Note that these faces will be defined as check surfaces.

To project the obtained tool path on the check surfaces, click the **Advanced** button.

The **Retracting tool along tool axis** dialog box is displayed. This dialog box enables you to define the parameters of tool path projection.

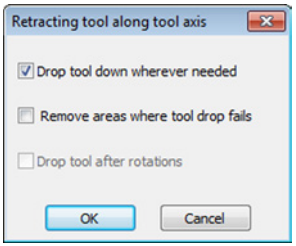

The **Drop tool down wherever needed** check box enables you to activate the projection of the tool path on the required 3D geometry. When you select this check box, the tool path applied to the drive surface is projected onto the defined drive surfaces.

The **Remove areas where tool drop fails** check box enables you to exclude the areas, where the projection cannot be performed, from the tool path. When this check box is selected, the positions where the projection failed are removed.

The **Drop tool after rotations** check box enables you to activate the projection of the tool on the surface after rotating or transforming the tool path.

The last option is available only if the **Rotate&Translate** option is activated on the **Roughing and More** page.

SolidCAM enables you to choose the following options to define the retract direction:

- **Along +X, -X, +Y, -Y, +Z, -Z**

  The retraction movement is performed along the chosen axis.

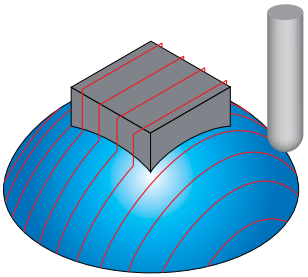

Retract tool in +Z

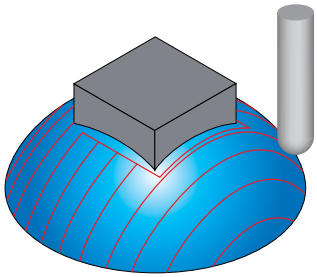

Retract tool in +X

- **Along XZ, YZ, XY plane**

  The retraction movement is performed in the chosen plane. The retraction movement is performed in the direction defined by the projection of the drive surface normal vector on the chosen plane.

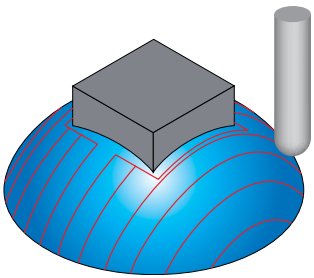

Retract tool in XY plane

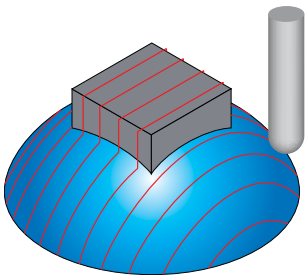

Retract tool in XZ plane

- **Along-optimized in XZ, YZ, XY plane**

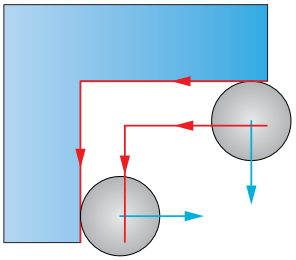

The retraction movement is performed in the chosen plane, similar to the **Along XZ, YZ, XY plane** plane options; the differences are in the direction of the retract movements in the chosen plane. The contact points, at which collisions are detected, are projected on the chosen plane and connected into a contour. This contour is offset outwards by a distance equal to the sum of the tool radius and the **Stock to leave** values. This option enables you to perform the retract movements in optimal directions, generating the shortest tool path.

- **Along surface normal**

The retraction movement is performed in the direction of the drive surface normal at the contact point.

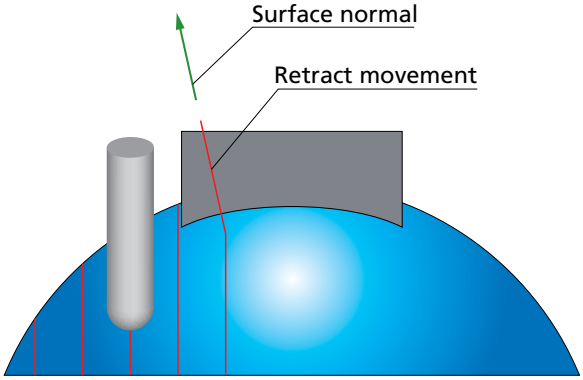

- **Away from origin**

The retraction movement is performed in the direction of the vector from the Coordinate System origin to the tool contact point.

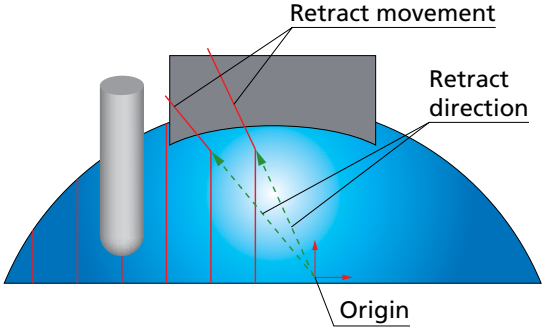

- **Along to cut center**

  The retraction movement is performed in the direction of the center of the cutting pass. This option is useful for tube milling.

  On the illustration, the machining of the drive surface is performed with the parallel Z cutting passes. When the gouging of the check surface occurs, the retract movement is performed to the cutting pass center, avoiding the gouge.

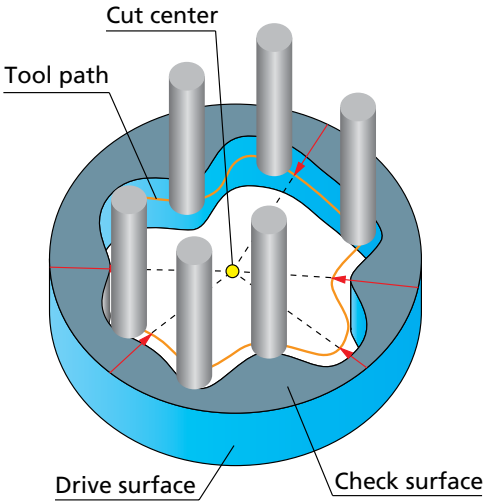

- **Along tool contact line**

  The retraction movements are performed along the contact line between the tool and the drive surface.

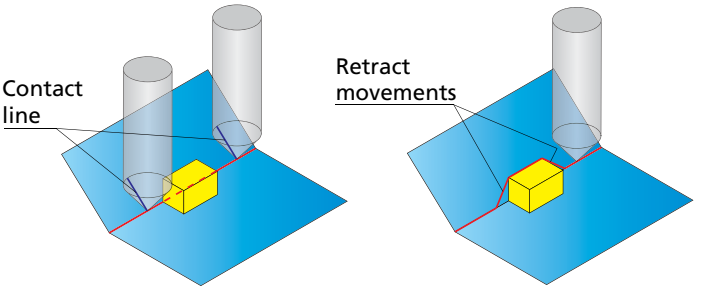

- **Along user-defined direction**

  This option enables you to define the direction of the retraction movements by a vector. The **Direction** dialog box (available with the ... button) enables you to define the direction vector by its coordinates (**dX**, **dY** and **dZ** parameters). Using the ... button, SolidCAM enables you to pick the start and end points of the vector directly on the solid model.

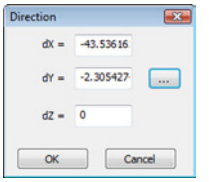

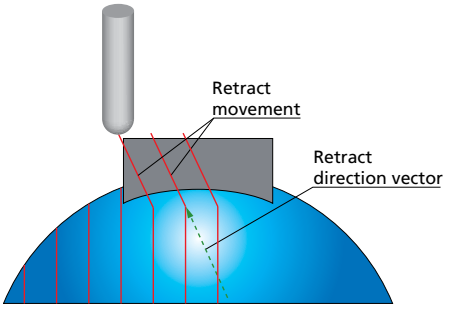

- **Along tool axis**

  This option enables you to avoid the possible collisions by retracting the tool in the direction of the tool axis.

Trim and relink toolpath

When this strategy is used, SolidCAM trims the segments of the tool path where the collisions are detected. The tool path updated by trimming does not contain gouges.

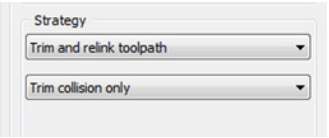

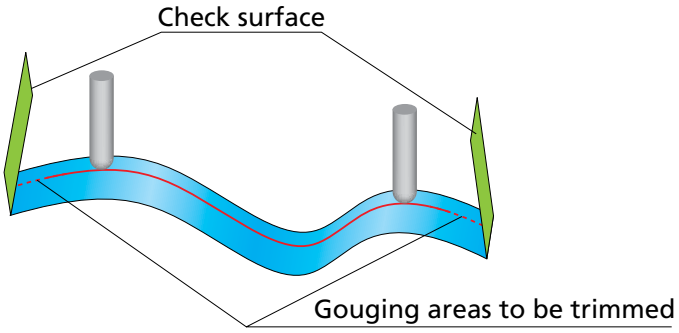

The following trimming options are available:

- **Trim collision only**. With this option, only the colliding segments of the tool path are trimmed out.

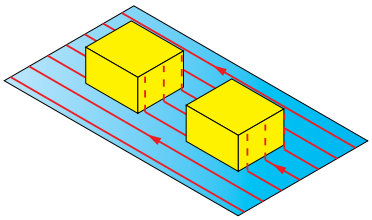

- **Trim tool path after first collision**. With this option, SolidCAM trims the whole cutting pass, after the first detected collision.

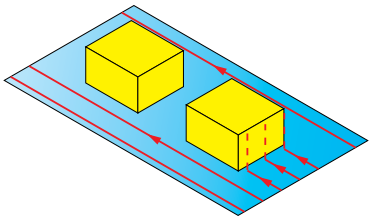

- **Trim tool path before last collision**. With this option, SolidCAM trims the whole cutting pass, before the last detected collision.

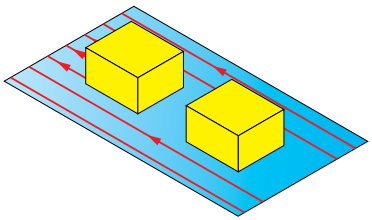

- **Trim tool path between first and last collision**. With this option, SolidCAM trims the cutting path between the first and last detected collisions.

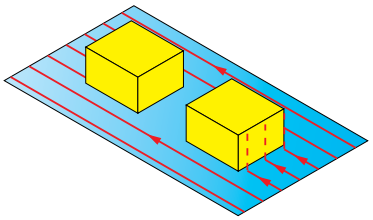

- **Trim tool path before first collision**. When a collision is detected, the tool path is trimmed in such a manner that the portion of the current cut from the beginning till the first collision is removed from the tool path.

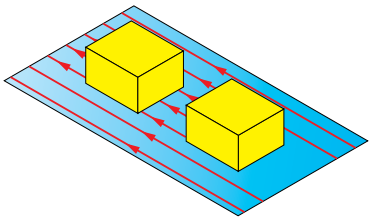

- **Trim tool path after last collision**. When a collision is detected, the tool path is trimmed in such a manner that the portion of the current cut from the last collision till the end of the cut is removed from the tool path.

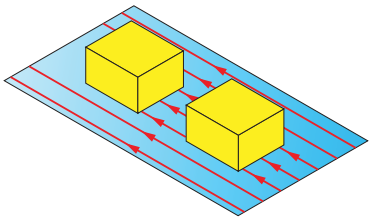

Stop tool path calculation

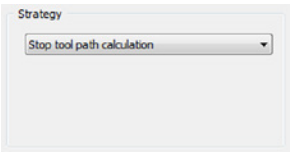

When this option is chosen, the tool path is generated until the position where the first gouge occurs. At this point the tool path calculation is stopped. The last cutting pass (where the gouge is detected) is not included into the operation tool path. You have to edit the machining parameters and calculate the tool path again to avoid the gouge.

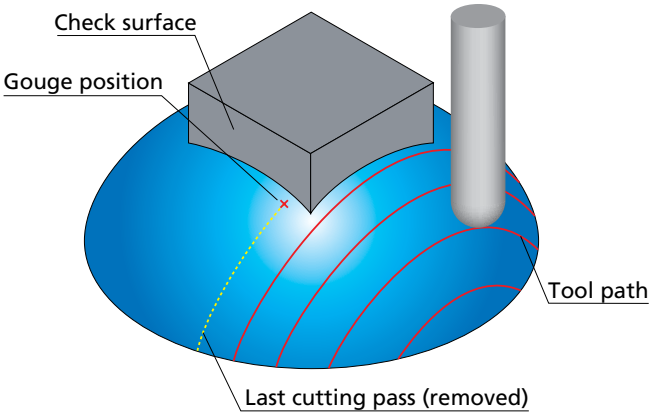

Report collisions

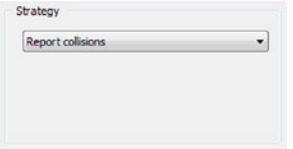

SolidCAM checks only for collision between the tool and the check faces, without trying to avoid the collision; a warning message is displayed.

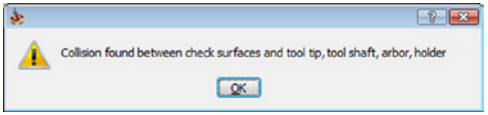

Using the simulation, you can check the collision areas and choose the appropriate method to avoid gouging.

9.2 Clearance data

The **Clearance data** page enables you to define the clearance offsets for arbor and tool holder in order to get a guaranteed clearance gap between arbor, tool holder and workpiece.

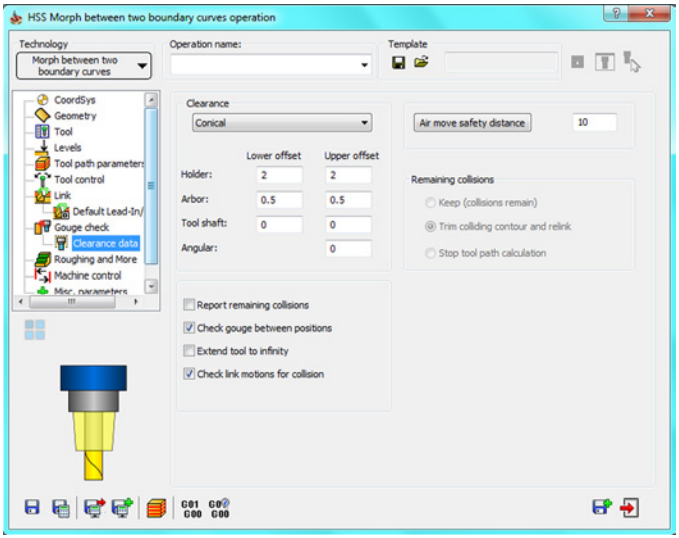

9.2.1 Clearance

SolidCAM enables you to choose either **Cylindric** or **Conical** shape of the tool holder, arbor and tool shaft clearance.

Cylindric clearance

The **Holder** parameter defines the offset applied to the tool holder cylinder from all sides. The **Arbor** defines the offset applied to the arbor cylinder from all sides. The **Tool Shaft** parameter defines the offset applied to the tool shaft cylinder from all sides. The **Angular** parameter defines the angular offset applied to the tool.

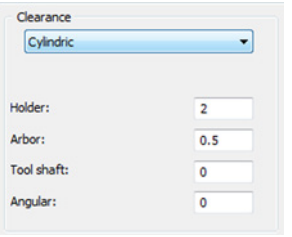

Generally, an arbor is the tool extension located between the tool shaft and its holder. Lollipop and Slot End Mills do not have tool shaft, the cylindrical Connection between tool and holder is considered as Arbor.

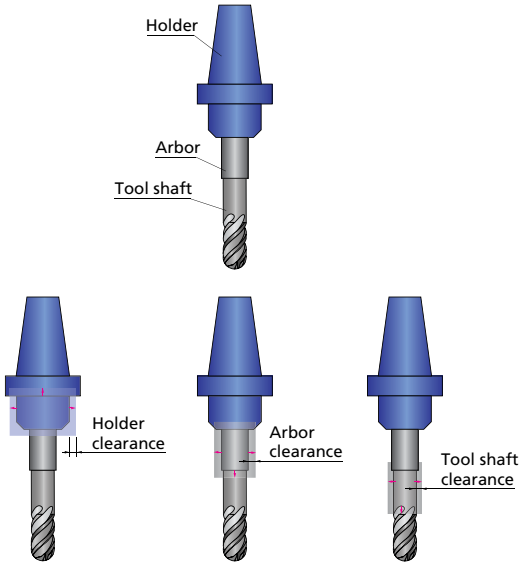

Conical clearance

Conical clearance is applied similarly to the cylindrical one being defined with **Upper** and **Lower offset** values.

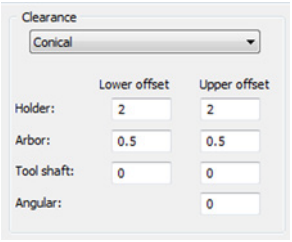

Angular conical clearance is applied between the tool and collision surface. It is spanned between the contact point of the tool, the drive surface, and the collision point.

The **Upper offset** value must be greater than the **Lower offset** value.

Air move safety distance

This parameter enables you to define the minimal distance between the clearance area and the **Drive surface** (see topic **3.1.1**).

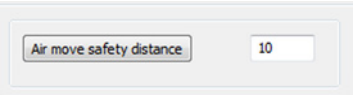

9.2.2 Report remaining collisions

This option enables you to generate a report about possible collisions that remain in the tool path after gouge checking. When this option is selected, SolidCAM checks the tool path using the tolerance two times greater than the specified value (see topic **9.1.2**) to detect collisions.

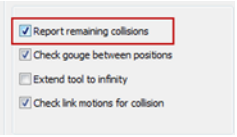

You can turn off the collision checking between the tool path positions (see topic **9.2.3**). In such case the tool path calculation is accelerated, but the possibility of remaining collisions is present. The **Report remaining collisions** option is helpful to notify about possible collisions in the resulting tool path.

In case of engraving or trimming operations used together with the **Report remaining collisions** option, SolidCAM notifies you about collisions. The reason for such notification is that the technology of such operations requires that the tool tip be inside the machined surfaces.

The **Report remaining collisions** option enables you to detect too small retract and approach distances or too low clearance levels. In such case, the report about collisions enables you to solve the potential problems.

9.2.3 Check gouge between positions

The **Check gouge between positions** option enables you to avoid the possible gouges between tool path positions. When the movement is performed between two successive tool path positions, this option enables you to check for possible collisions of the tool and tool holder with drive and check surfaces.

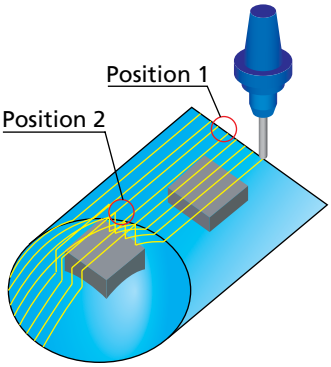

This option is useful especially for flat faces machining, where the tool path positions are generated only at the drive surface edges.

When the **Check gouge between positions** option is not used, the gouge checking of the tool path on the flat face is not performed because of absence of tool path positions on the face. The gouging of a boss may occur.

When the **Check gouge between positions** option is used, the gouge checking between tool path positions on the flat surface is performed. The gouging of a boss is avoided.

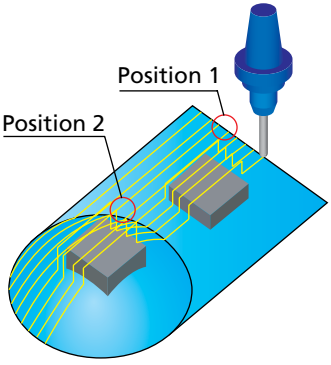

The **Check gouge between positions** option has no effect on the gouge checking of the tool path spherical surface, because of the many tool path positions that were generated on this face. The gouge checking for this face is performed for these positions avoiding possible collisions.

9.2.4 Extend tool to infinity

This option enables you to consider the tool as being extended to infinity during collision check in order to make sure that all active surfaces are checked for collision, no matter where they are located in space.

9.2.5 Check link motions for collision

When this option is chosen, SolidCAM automatically performs the gouge checking for link movements in order to avoid possible collisions.

Roughing and More

10

The **Roughing and More** page enables you to define the parameters of the rough HSS machining.

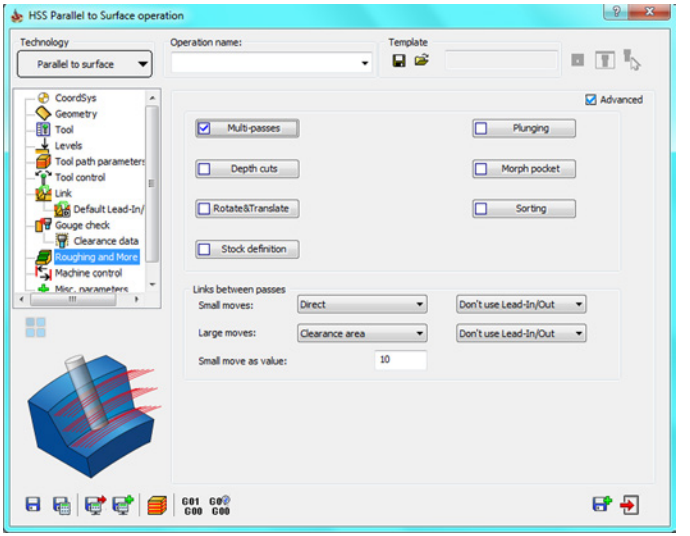

10.1 Multi-passes

Using the **Multi-passes** option, SolidCAM enables you to perform the machining in a number of roughing and finishing passes. During the tool path calculation, SolidCAM generates the initial cutting pass located on the drive surface and then creates a specified number of roughing and finishing passes at different offsets specified for roughing and finishing.

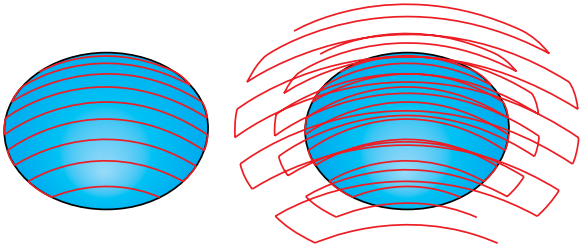

Initial tool path | Multi passes tool path

When this option is used, SolidCAM generates for each tool path point a number of offsets in the direction of the surface normal. Connecting these points, SolidCAM generates a number of evenly spaced cuts with a similar tool path shape.

Click the **Multi-passes** button to define the parameters in the **Multi-passes** dialog box. Select the **Use multi-passes** check box to enable the related options.

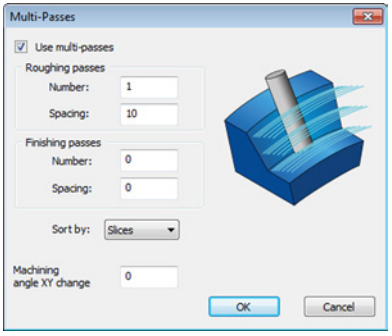

Roughing and finishing passes

The **Roughing passes** section enables you to define the **Number** of roughing passes and distance between them (**Spacing**).

The **Finishing passes** section enables you to define the **Number** of finishing passes and distance between them (**Spacing**).

During the tool path calculation, SolidCAM generates the initial cutting pass located on the drive surface and then creates a specified number of finishing passes using the specified **Spacing**. After the finishing, SolidCAM generates a specified number of roughing passes. The distance between the last finishing pass and the first roughing pass is defined by the **Spacing** parameter in the **Finishing passes** section.

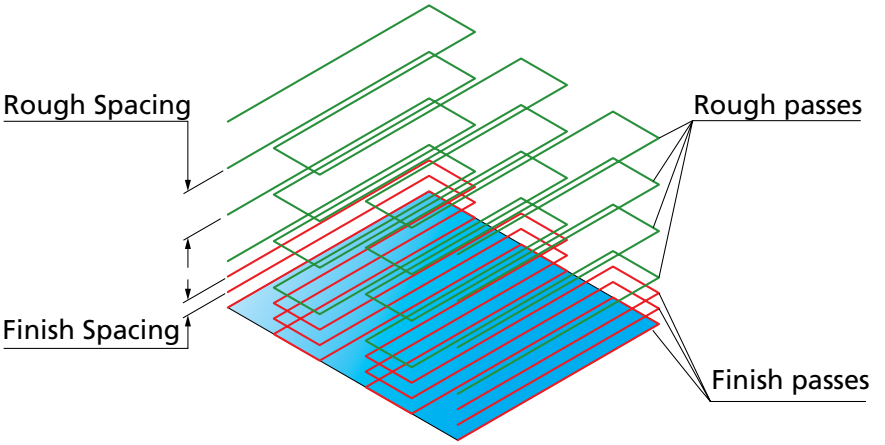

In the illustration above, SolidCAM generates three finishing passes with the specified finishing spacing and then generates four roughing passes with the specified roughing spacing. The distance between roughing and finishing parts of the tool path is equal to the finishing spacing.

Sort by

This option enables you to define the way how the generated passes are sorted and linked.

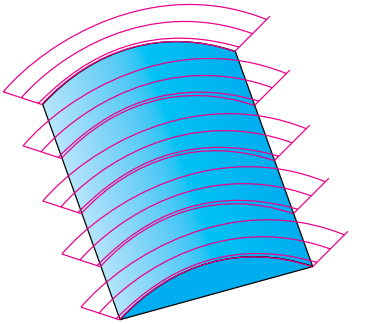

- **Slices**. When this option is chosen, all the roughing and finishing offsets of the current cutting pass are performed before moving to the next cutting pass.

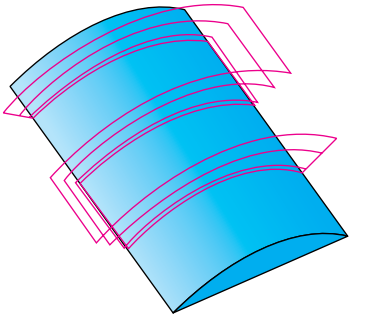

- **Passes**. When this option is chosen, all the cutting passes of the current offset level are performed before moving to the next offset level.

Machining angle XY change

This option enables you to define the gradual change of the machining angle for multi-cut roughing. This option is useful when the material needs to be removed at different angles in each pass. This option is enabled for **Parallel cuts** strategy with **Linear** or **Hatch** modes.

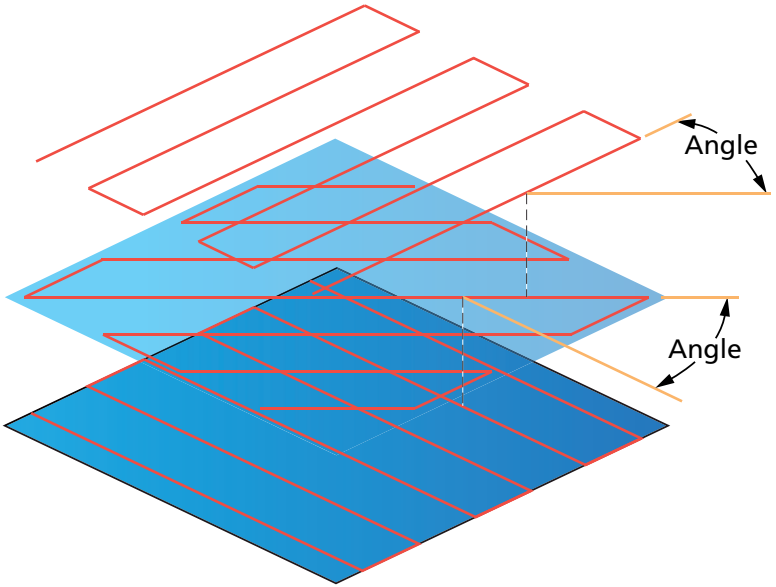

The value defines the angle to which the tool path rotates with every new pass.

10.2 Depth cuts

The **Depth cuts** option enables you to perform HSS rough and finish machining similar to the **Multi-passes** option (see topic **10.1**). Using the **Multi-passes** option, SolidCAM generates roughing and finishing passes in the direction of the surface normal, independent from the tool orientation. The **Depth cuts** option enables you to perform roughing and finishing cuts in the direction of the tool axis.

SolidCAM enables you to use a combination of the **Multi-passes** and **Depth cuts** options for the machining. In this case, for each depth cut, SolidCAM generates a specified number of Multi-passes. For example, if you define 5 depth cuts and 10 Multi-passes, SolidCAM generates 5 * 10 = 50 cuts.

Click the **Depth cuts** button to display the **Depth Cuts** dialog box. This dialog box enables you to define the parameters of the depth cuts.

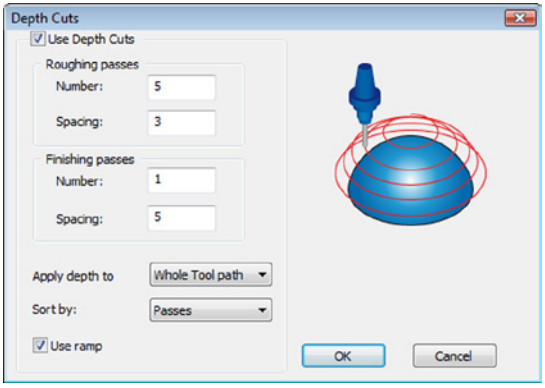

When this option is used, SolidCAM generates for each tool path point a number of offsets in the direction of the tool axis. Connecting these points, SolidCAM generates a number of evenly spaced cuts with the similar tool path shape.

Roughing and finishing passes

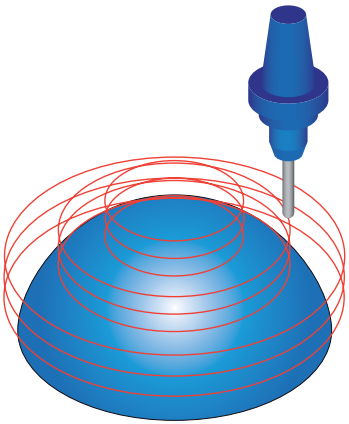

The **Roughing passes** section enables you to define the **Number** of roughing passes and distance between them (**Spacing**).

The **Finishing passes** section enables you to define the **Number** of finishing passes and distance between them (**Spacing**).

During the tool path calculation, SolidCAM generates the initial cutting pass located on the drive surface and then creates a specified number of finishing passes using the specified **Spacing**. After the finishing, SolidCAM generates a specified number of roughing passes. The distance between the last finishing pass and the first roughing pass is defined by the **Spacing** parameter in the **Finishing passes** section.

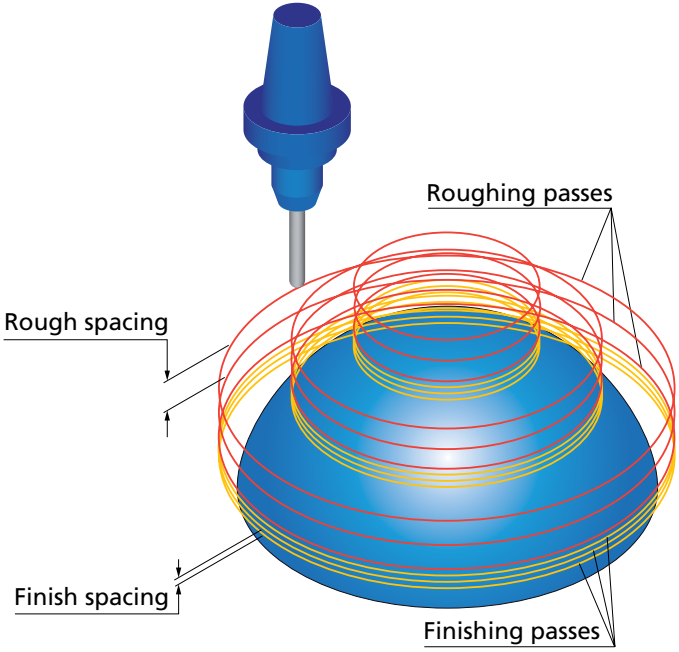

In the illustration above, SolidCAM generates three finishing passes with the specified finishing spacing and then generates four roughing passes with the specified roughing spacing. The distance between roughing and finishing parts of the tool path is equal to the finishing spacing.

Apply depth to

This option enables you to choose whether the defined depth cuts parameters will be applied to the entire tool path or only to the first pass/slice.

Sort by

This option enables you to define how the generated passes are sorted and linked.

- **Slices**. When this option is chosen, all the roughing and finishing offsets of the current cutting pass are performed before moving to the next cutting pass.
- **Passes**. When this option is chosen, all the cutting passes of the current offset level are performed before moving to the next offset level.

Use ramp

The **Use ramp** option enables you to perform a single spiral cutting pass instead of several separate passes generated by the **Depth cuts** option.

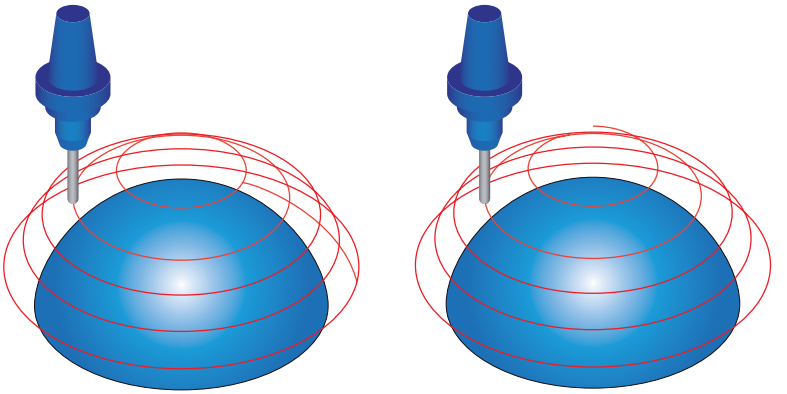

Use Ramp check box is not selected

Use Ramp check box is selected

The image above illustrates the **Use ramp** option that is used to convert a number of circular separate passes into a single taper spiral cutting pass.

10.3 Rotate and Translate

The **Rotate and Translate** strategy is useful for parts with multiple identical elements arranged in a circular pattern. Instead of adding a separate operation and defining the same parameters for each of these patterns, you can have the same tool path repeated a given number of times by rotation around the Z-axis.

The **Rotate** / **Translate Tool Path** dialog box enables you to define the parameters of rotation.

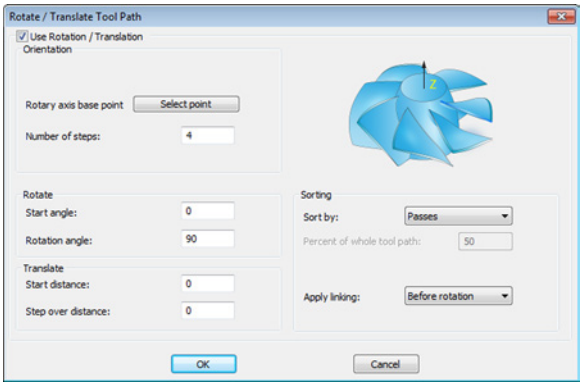

Orientation

- **Rotary axis base point**. This option enables you to define the position of the rotation axis. When you click the Select point button, the Select point dialog box is displayed with the coordinates of the point you pick on the model.
- **Number of steps**. This parameter enables you to define the number of instances of the circular pattern. In other words, it defines how many times the initial tool path will be repeated around the rotation axis.

Rotate

This section contains two parameters that enable you to rotate the tool path:

- **Start angle**. This parameter enables you to define the rotation angle for the first tool path instance of the circular pattern.
- **Rotation angle**. This parameter enables you to define the angle between two adjacent instances of the circular pattern.

Translate

This section contains two parameters that enable you to transform the tool path:

- **Start distance**

  This parameter defines the distance between the initial tool path instance and the next one in the transformed pattern.

- **Step over distance**

  This parameter defines the distance between two adjacent tool path instances of the transformed pattern.

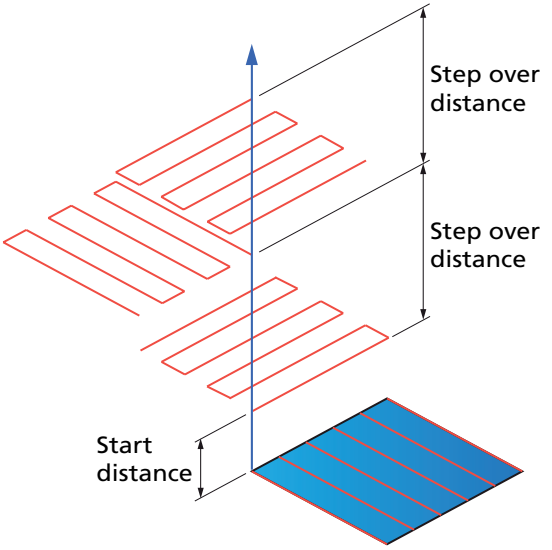

These distances are measured along the Z-axis.

Sorting

- **Sort by**. This option enables you to choose whether the whole tool path will be rotated or only a certain part of it. The following options are available:

  Complete tool path. With this option the whole tool path will be rotated.

  Passes. With this option the whole tool path will be rotated. The resulting tool path will be sorted and linked by passes.

  Slices. With this option the whole tool path will be rotated. The resulting tool path will be sorted and linked by slices.

  Partial tool path. With this option the portion of tool path specified by a percentage is rotated. The percentage is specified by the **Percent of whole tool path** parameter.

- **Apply stock**. This option enables you to trim the tool path with the stock model either before or after the rotation.

  Before rotation. With this option, SolidCAM generates the initial tool path, trims it with the stock model and then performs the rotation. In this case all the tool path instances are trimmed with the same stock.

  After rotation. With this option, SolidCAM performs trimming after the tool path rotation. In this case the stock used for the trimming is updated after each rotation instance.

  The **Apply stock** option is available only when the **Stock definition** option is selected in the **Roughing and More** page.

- **Apply linking**. This option enables you to link the tool path either before or after the rotation.

  Before rotation. With this option, SolidCAM generates the initial tool path, links it and then performs the rotation. In this case the link movements in all the rotated instances of the tool path are the same.

  After rotation. With this option, SolidCAM applies linking after the tool path rotation. It is recommended to use this option with the collision control activated to avoid possible collisions in the link movements.

  The **Apply linking** option is available only when the **Before rotation** option is used for **Apply stock**. When **Apply stock** is set to **After rotation**, the **Apply linking** option is disabled and the **After rotation** option is used.

10.4 Stock definition

This button displays the **Stock Definition** dialog box that enables you to define trimming of the HSS passes to the pre-machined or casting stock faces to avoid unnecessary air cutting.

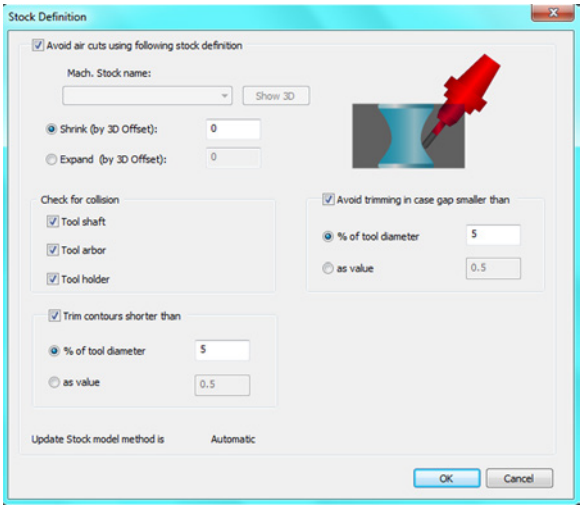

When the **Avoid air cuts using following stock definition** option is chosen, SolidCAM calculates the **Updated Stock model** after all the previous operations. SolidCAM automatically compares the updated stock model with the operation target geometry and machines the difference between them.

SolidCAM provides you with two modes for the Updated Stock model calculation: **Automatic** and **Manual**. For CAM-Parts, the mode can be specified in the **Updated Stock calculation** page of the **Part Settings** dialog box. In the **Automatic** mode, SolidCAM automatically calculates the Updated Stock model for the previous operations. In the **Manual** mode, SolidCAM enables you to manually save the Updated Stock model after the **SolidVerify** simulation and use it for avoiding air cuts. SolidCAM notifies you about chosen **Updated Stock model** method using the **Update Stock model method is** parameter.

For more information about **Updated Stock model** methods refer to the **SolidCAM Milling User Guide** book.

Machined Stock Name

This option enables you to choose the previously generated **Updated Stock model** for the tool path calculation.

This field is active only when the **Manual** method of the Updated Stock model calculation is used.

The **Show 3D** button displays the difference between the updated stock model and the target geometry used in the operation.

Shrink/Expand

SolidCAM provides you with the possibility to shrink/expand the stock model used for avoiding air cuts. The defined **Shrink**/**Expand** value enables you to define the 3D offset by which the stock model will be modified.

Check for collision

SolidCAM enables you to prevent the collisions between the tool/holder components and the machined stock model.

- **Tool shaft**

  Select this check box to check for collision between the tool shaft and the machined stock.

- **Tool arbor**

  Select this check box to check for collision between the tool arbor and the machined stock.

- **Tool holder**

  Select this check box to check for collision between the tool holder and the machined stock.

Trim contours shorter than

This option enables you to exclude the contours of the tool path that are shorter than a specified length.

When this check box is selected, the contours whose length is smaller than the specified contour length value are excluded from the tool path. The specified contour length can be defined as percentage of tool diameter or as a value.

Avoid trimming in case gap smaller than

This option enables you to ignore small gaps on the tool path that are shorter than a specified length.

When this check box is selected, the gaps whose length is smaller than the specified length value are ignored, and linking is not applied to them. The specified gap length can be defined as percentage of tool diameter or as a value.

10.5 Plunging

The **Plunging** option enables you to perform HSS machining using the plunging technology. Plunging is a totally different concept of removing material with a special tool. Instead of milling the material, the tool moves up and down in a motion similar to drilling, at the points along the tool path.

Click the **Plunging** button to display the **Plunging** dialog box. This dialog box enables you to define the parameters of the plunging.

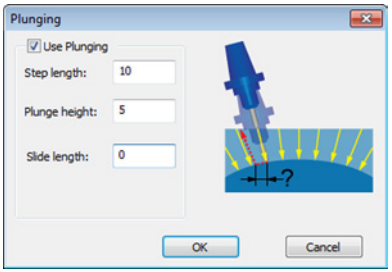

When the **Plunging** option is used, SolidCAM generates for each cutting pass a number of tool path positions. These positions are evenly spaced along the cutting pass. The distance between two successive tool positions is defined by the **Step length** parameter. In each such position SolidCAM generates a plunging tool path in the direction of the tool axis; the height of this tool path is defined by the **Plunge height** parameter. The **Slide length** value defines the distance the tool travels after the plunge move.

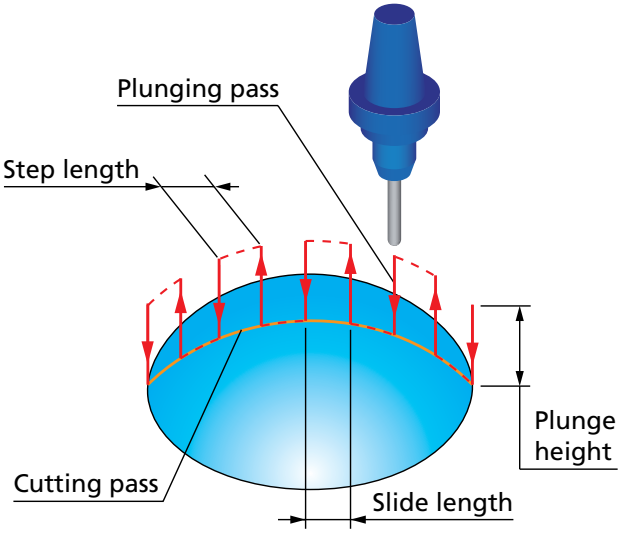

10.6 Morph pocket

The **Morph pocket** option enables you to perform HSS pocket machining. When this option is used, all the side faces of the pocket have to be defined as the **Drive surface**.

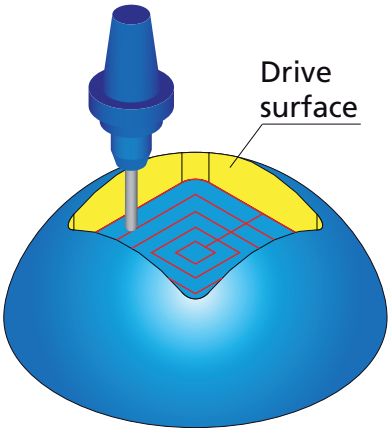

Click the **Morph pocket** button to display the **Morph Pocket** dialog box. This dialog box enables you to define the parameters of the pocket machining.

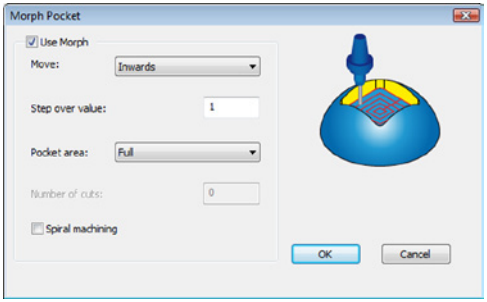

Move

This option enables you to define the direction of the pocket machining.

- **Outwards**. This option enables you to work in a pocket area starting from the middle of the pocket and cutting towards the outside border of the pocket.

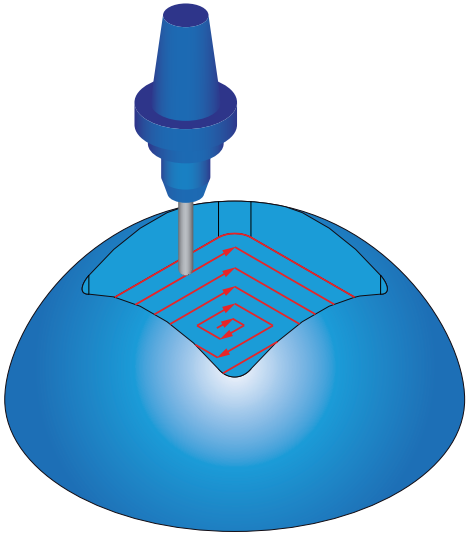

- **Inwards**. This option enables you to work in a pocket area starting from the outside border of the pocket and cutting towards the middle of the pocket.

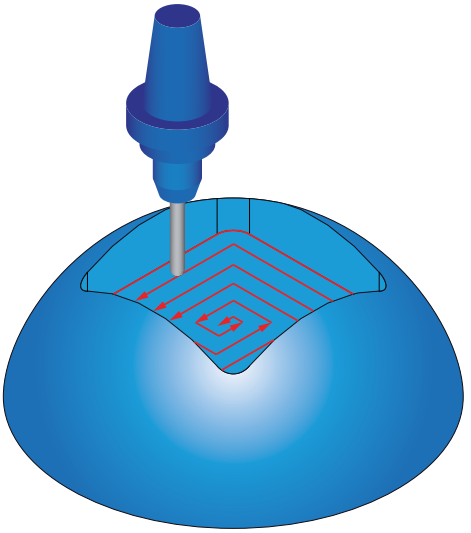

Step over value

This parameter enables you to define the distance between two successive cuts in the pocket pass.

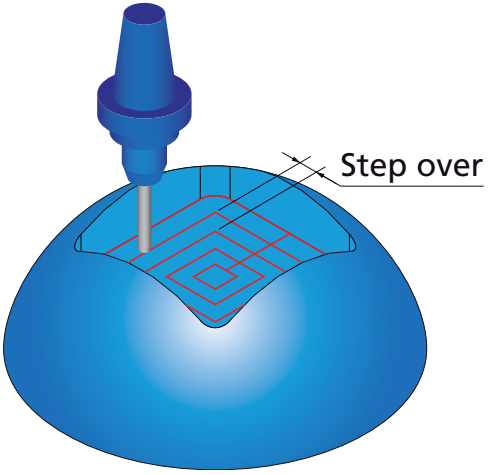

Pocket area

This option defines the pocket area to be machined.

When the **Full** option is chosen, SolidCAM performs the machining of the whole pocket.

The **Determined by number of cuts** option enables you to machine a partial pocket area determined by the number of cuts (specified by the **Number of cuts** parameter).

Spiral machining

When this check box is not selected, the machining is performed by a number of evenly spaced offsets connected with a straight tool movement.

When this check box is selected, SolidCAM generates a spiral tool path to machine the pocket.

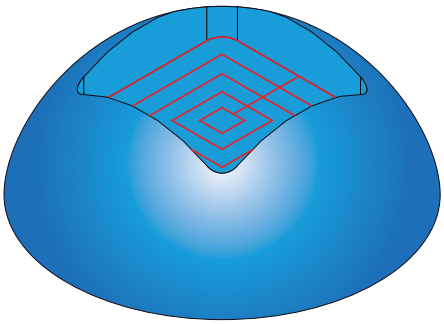

Spiral machining check box is not selected

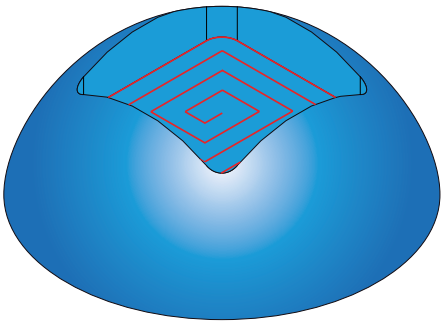

Spiral machining check box is selected

10.7 Sorting

This button displays the **Sorting options for Roughing** dialog box that enables you to define the sorting of the tool path passes.

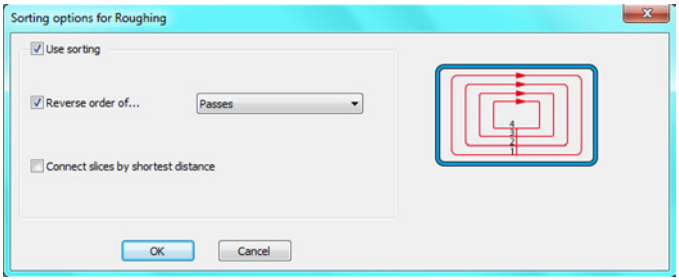

10.7.1 Reverse order of passes/tool path

When this check box is not selected, the tool path passes are performed in the default order and in the direction of the geometry.

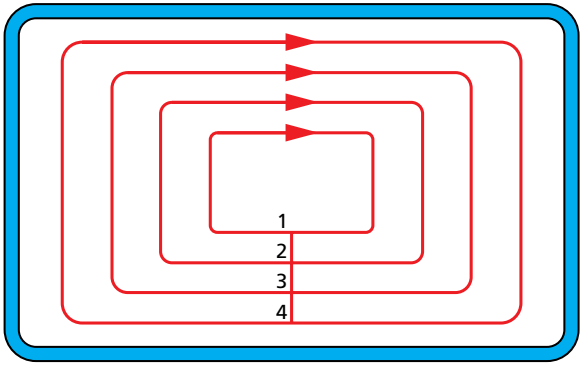

When the check box is selected and the **Passes** option is chosen from the list, the tool path passes are performed in the reversed order.

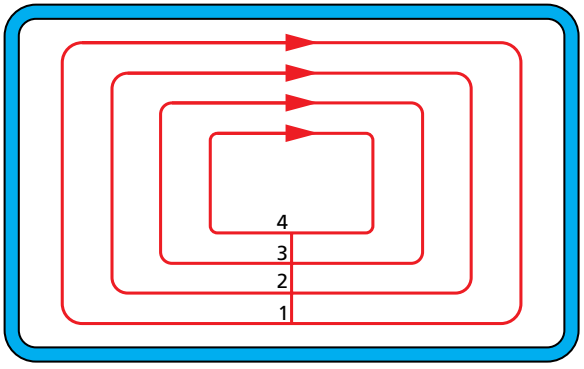

When the check box is selected and the **Complete tool path** option is chosen from the list, the tool path passes are performed in the reversed order and direction.

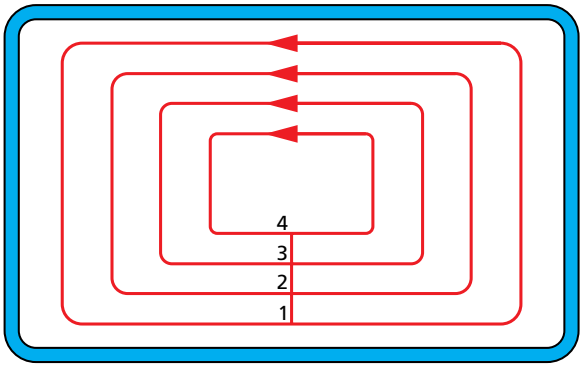

10.7.2 Connect slices by shortest distance

When this check box is not selected, the connection between tool path slices is performed through the clearance level: after a certain slice has been machined, the tool goes up to the clearance level and then descends to machine the next slice.

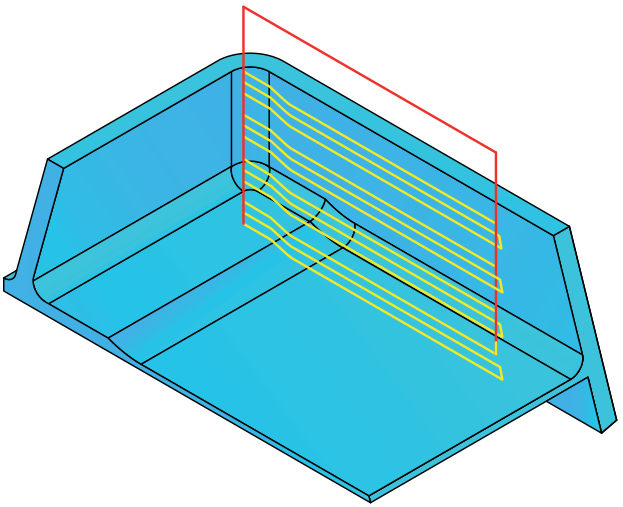

When this check box is selected, the tool path slices are connected by lines automatically calculated by SolidCAM, so that the distance between the end of one slice and the start of the next one is minimal.

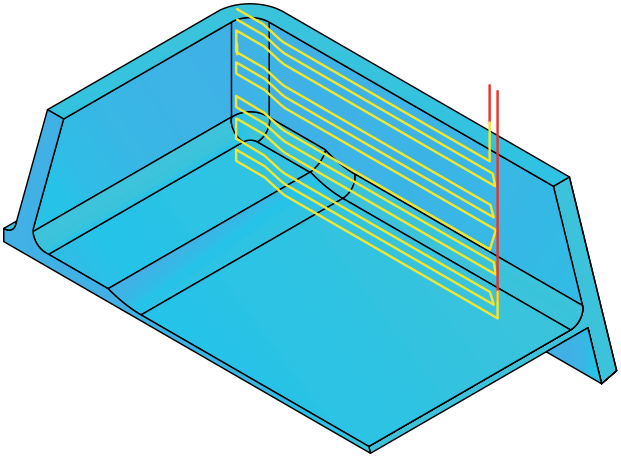

The options of **Plunging**, **Morph pocket**, and **Sorting** are available only when the **Advanced** check box is selected.

10.8 Links between passes

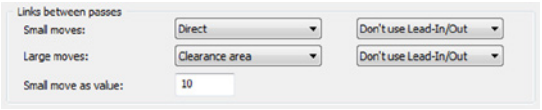

When the **Multi-passes** (see topic **10.1**) or the **Depth cuts** (see topic **10.2**) option is used, SolidCAM performs the machining at several cutting levels. The **Links between passes** option enables you to define how the linking of the tool moves between these levels.

SolidCAM enables you to choose two different linking options for large and small movements between cutting levels. The maximum size of movements to be considered as small can be specified by a **Value**.

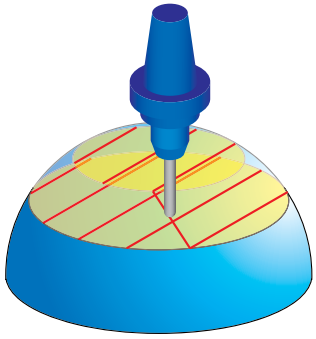

The following **Link types** are available:

- **Direct**

  After the level machining, the tool moves directly to the first pass of the next level.

- **Safety distance**

  After the level machining, the tool retracts to the **Safety distance** and then directly moves to the **Safety distance** of the next level.

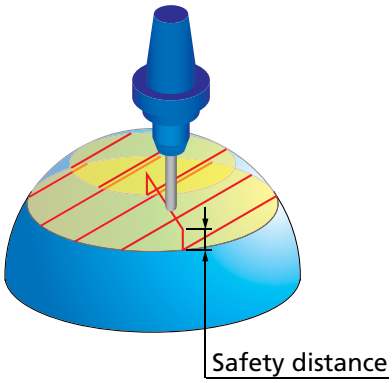

- **Clearance area**

  After the level machining, the tool retracts to the Clearance area and then performs the approach movement to the next level.

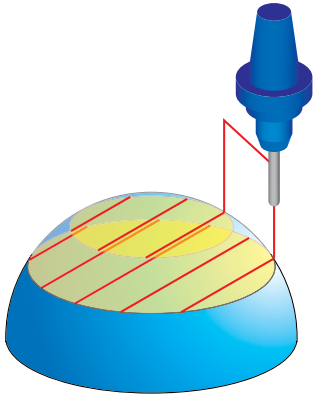

- **Follow surfaces**

  After the level machining, the tool retracts to the **Safety distance** and then performs an approach movement to the **Safety distance** at the next level. During the movement, the tool follows the drive surface geometry at the offset specified by the **Safety distance** parameter.

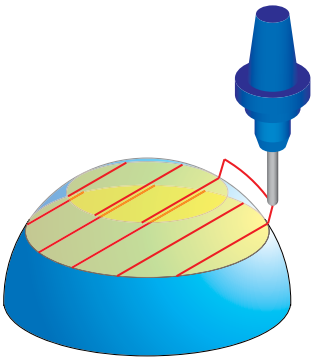

- **Blend spline**

  The tool movement connecting the cutting levels is performed by a spline tangential to the cutting passes.

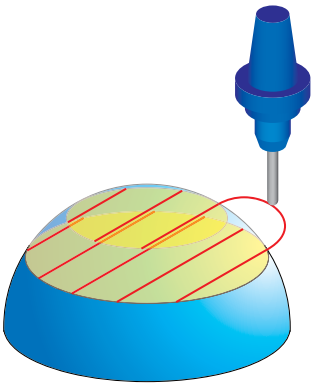

- **Safety distance and rapid**

  After the level machining, the tool retreats to the **Retract distance** and then directly moves to the **Retract distance** at the next level.

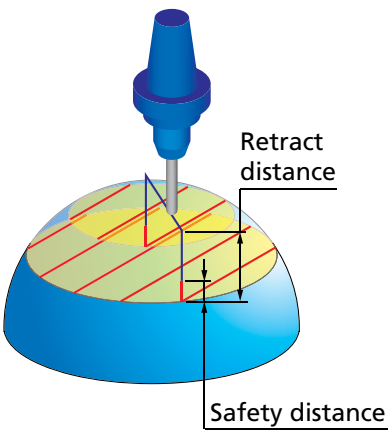

- **Follow Stock**

  When a gap area is detected, the tool performs a retract movement to the stock upper level and makes a link at the upper level height.

SolidCAM enables you to use pre-defined **Lead-In/Lead-Out** strategies (see topic **8.3**) to perform the movements between cutting levels.

- **Use Lead-In**

  The approach movement is performed to the cutting level using the specified **Lead-In** options.

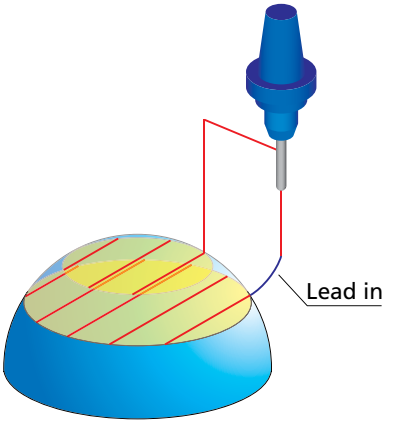

- **Use Lead-Out**

  The approach movement is performed from the cutting level using the specified **Lead-Out** options.

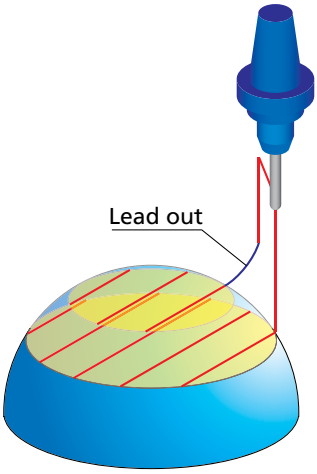

- **Use Lead-In/Out**

  The approach movement is performed to the cutting level using the specified **Lead-In** options and performs the retreat movement from the cutting level using the specified **Lead-Out** options.

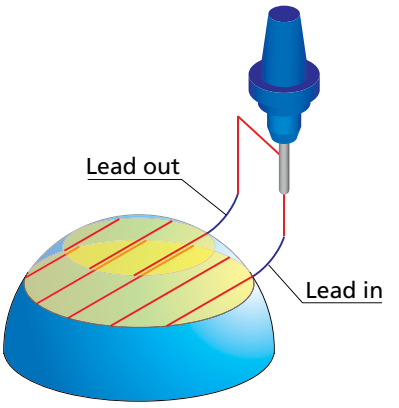

Machine control 11

Using the parameters of the **Machine control** page, you can optimize the calculated tool path according to the kinematics and special characteristics of your CNC-machine.

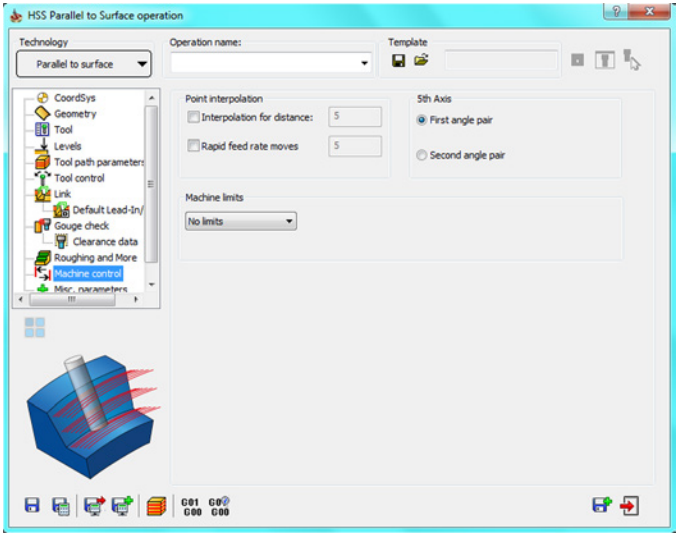

The default values of these parameters can be defined in the VMID file of your CNC-machine.

The interface of the **Machine control** page may vary depending on the parameters of your CNC-machine.

11.1 Point interpolation

The point interpolation provides the ability to create intermediate points by splitting long linear motions for feed rate moves and rapid rate moves.

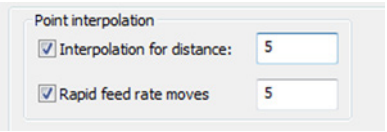

Interpolation for distance. Using this option, SolidCAM enables you to perform interpolation for the linear tool movements. When this option is active, a new interpolated tool position is defined at each distance, defined by the **Interpolation for distance** parameter. E.g. when the linear tool movement is performed from 0, 0, 0 to 0, 0, 100 and the Interpolation for distance option is used with the distance value of 10, SolidCAM adds 9 tool positions between start and end positions (0, 0, 10, then 0, 0, 20 etc.).

Rapid feed rate moves. This option enables you to specify the number of the feed rate moves that will be performed instead of one long linear motion.

11.2 Machine limits

With this option, SolidCAM enables you to use the machine limits defined within the machine definition to limit the tool path movements in translation and/or rotation axis.

The following options of machine limits use are available:

No limits

All the machine limits defined in the machine definition are ignored.

Translation limits

SolidCAM uses the machine limits defined in the machine definition for translation movements.

Rotation limits

SolidCAM uses the machine limits defined in the machine definition for rotation movements.

Limits All

SolidCAM uses the machine limits defined in the machine definition for both translation and rotation movements.

If the machine limits are exceeded, SolidCAM displays an error message.

The default value for the **Machine limits** option is defined in the VMID file of the CNC-machine.

11.3 5th Axis

For a 5-axis machine, the tool axis vector can always be mapped into two different angle pairs. During the tool path generation, SolidCAM calculates for each tool axis orientation both of these two angle pairs; only one of the two has to be chosen for the GCode generation.

Some machines can only use one of the angle pairs due to mechanical limitations. In this case the angle pair will then be chosen as the **First angle pair** or **Second angle pair**.

Misc. parameters 12

The **Misc. parameters** page enables you to define a number of miscellaneous parameters and options related to the HSS tool path calculation.

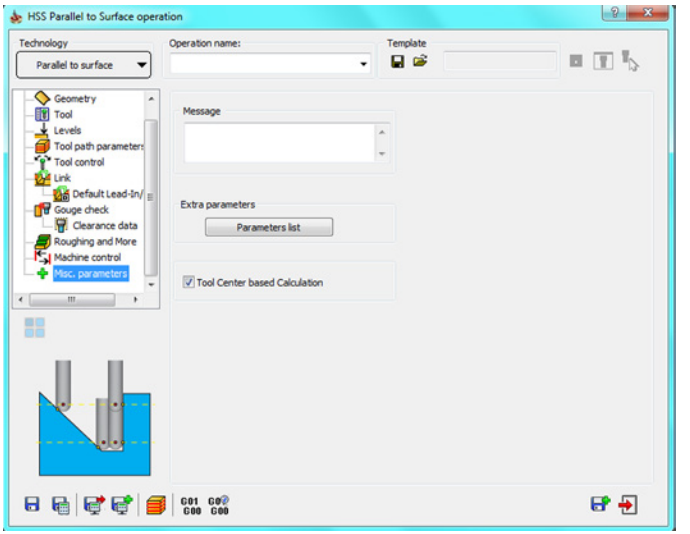

12.1 Message

In this field, you can type a message that will appear in the generated GCode file.

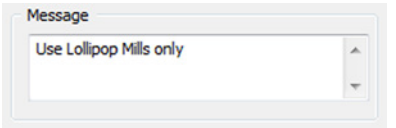

12.2 Extra parameters

The **Extra parameters** option enables you to use special operation options implemented in the post-processor for the current CAM-Part. The **Parameters List** button enables you to display the list of additional parameters defined in the post-processor.

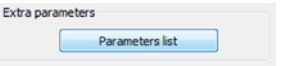

12.3 Tool center based calculation

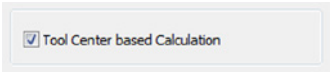

This option enables you to perform the tool path calculation based on the tool center.

The illustration shows the use of the **Tool center based calculation** option for Constant Z machining. When the option is turned off, the contact points between the tool and machined surface are located at the specified Z-levels. When the **Tool center based calculation** check box is selected, the tool center points are located at the specified Z-levels.

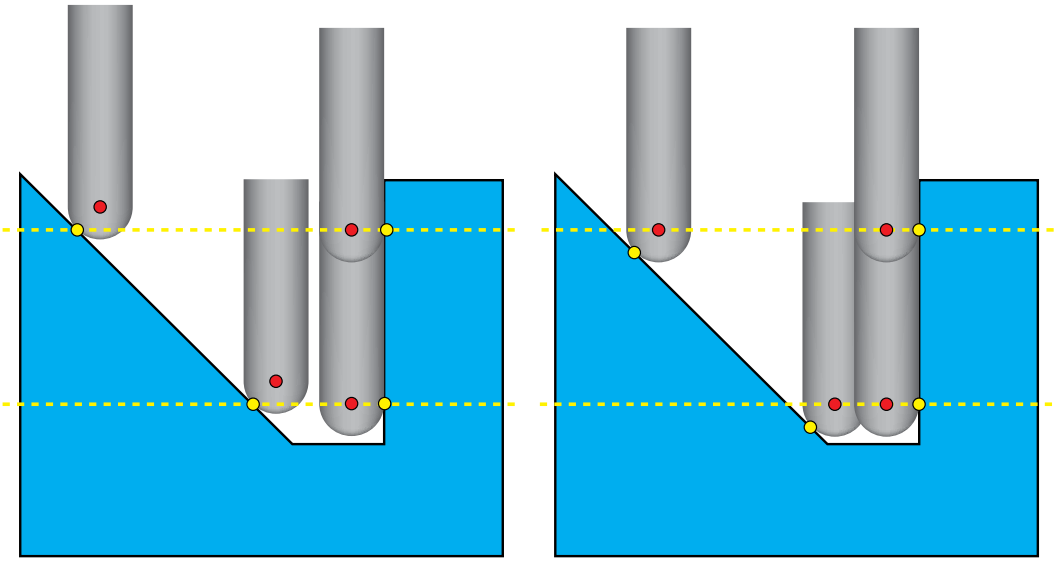

Check box is not selected

Check box is selected

Exercises

13

Exercise #1: Parallel cuts strategy

This exercise illustrates the use of the HSS Parallel Cuts operations for machining of the part shown on the illustration.

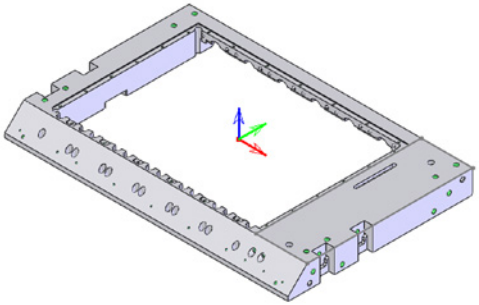

HSS_Linear_selected_faces_T1

This operation performs the Linear machining of the part of the upper face.

The drive surface is defined as shown below.

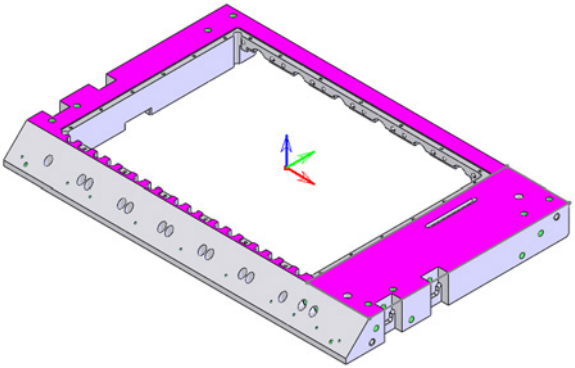

The machining area is limited by the following 2D boundary:

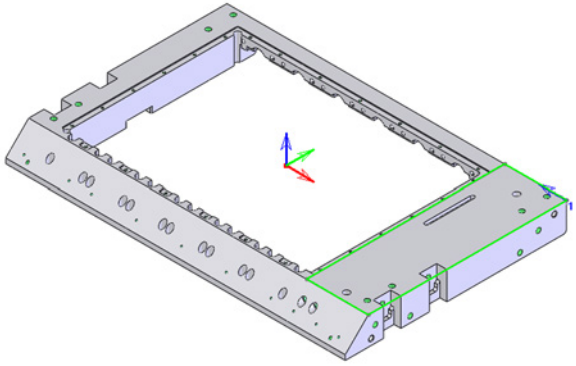

A bull nose mill tool of **Ø10** with the corner radius of 1 mm is used for the operation.

The machining is performed in parallel cuts that form a linear pattern on the defined drive surface.

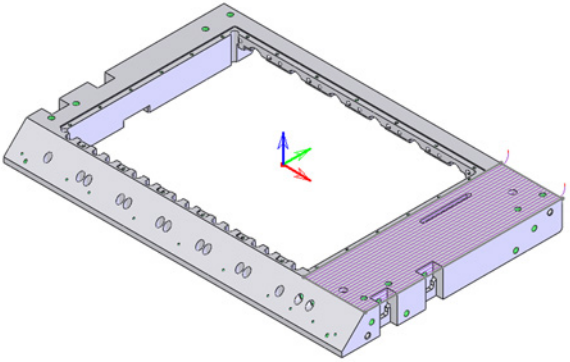

HSS_CZ_selected_faces1_T1

This operation performs the Constant Z machining of the right side vertical faces.

The drive surfaces are defined as shown below.

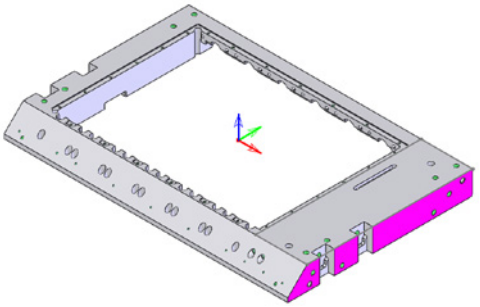

The drive surface including gaps is extended by 20 mm.

A bull nose mill tool of Ø10 with the corner radius of 1 mm is used for the operation.

The machining of the defined drive surfaces is performed in Constant Z parallel cuts.

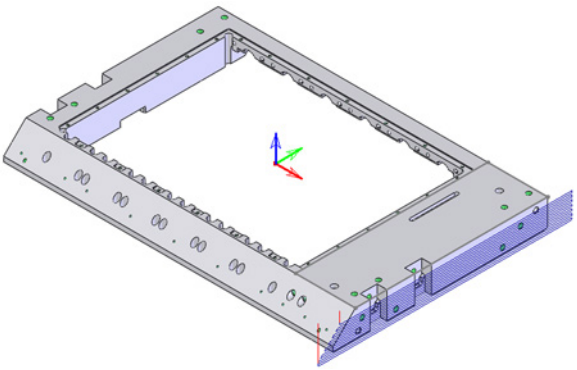

HSS_Hatch_selected_faces2_T1

This operation performs the Hatch machining of the side faces (Vertical and Inclined).

The drive surfaces are defined as shown below.

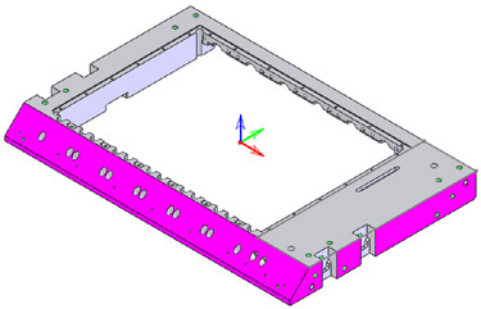

The hatch angle is set to **90°**.

A bull nose mill tool of **Ø10** with the corner radius of 1 mm is used for the operation.

The defined drive surfaces are machined in parallel cuts performed in the hatch manner.

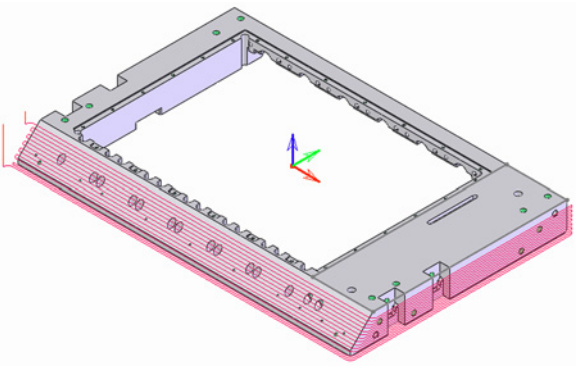

Exercise #2: Parallel to curve strategy

This exercise illustrates the use of the HSS Parallel to Curve operation for cavity machining.

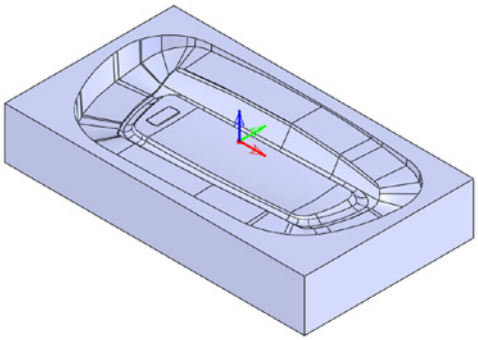

The **HSS_ParToCurve_selected_faces_T1** operation is used to perform the finish machining of the cavity faces.

The geometry is defined as shown below.

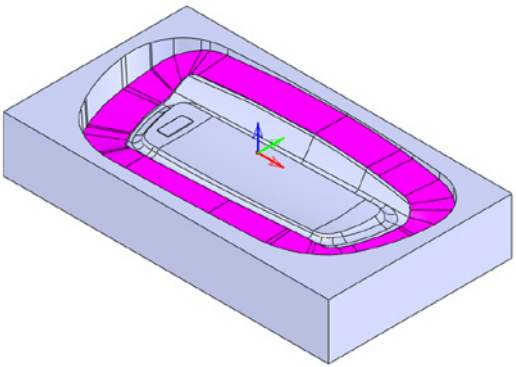

Drive surface

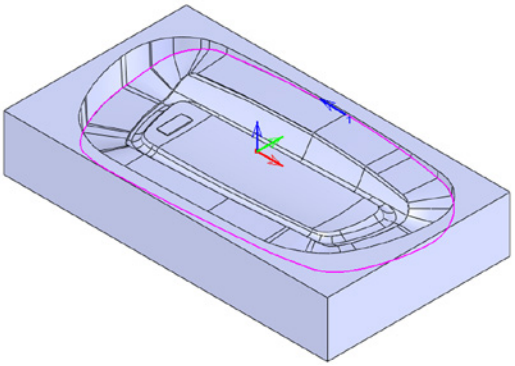

Edge curve

A ball nose mill tool of **Ø6** is used for the operation.

The **Spiral** cutting method is used to perform the spiral machining of the faces.

Gouge checking is performed to avoid the possible collisions between the tool and the drive surface. The **Retract along tool axis** gouge checking strategy is used.

The machining of the defined drive surface is performed in cuts parallel to the edge curve presented on the illustration.

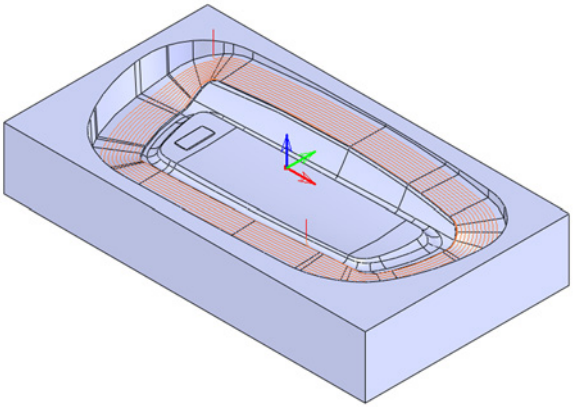

Exercise #3: Parallel to surface strategy

This exercise illustrates the use of the HSS Parallel to Surface operation for machining of the cusps walls.

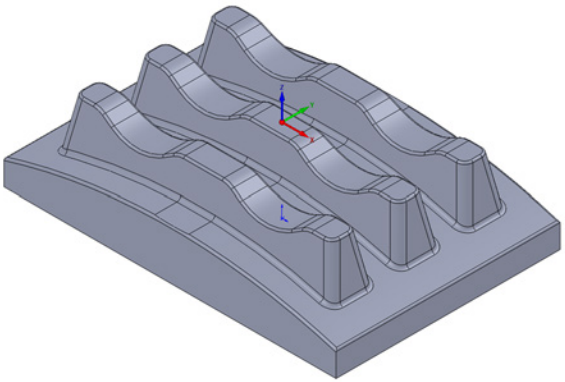

The **HSS_ParS_selected_faces2** operation is used to perform the finish machining of the side faces.

The geometry is defined as shown below.

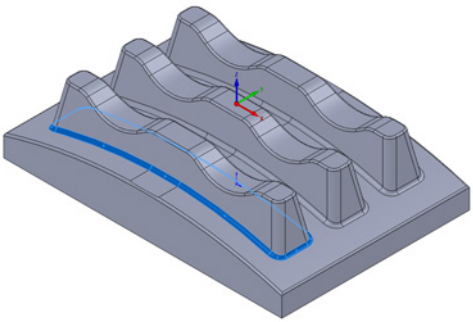

Drive surface

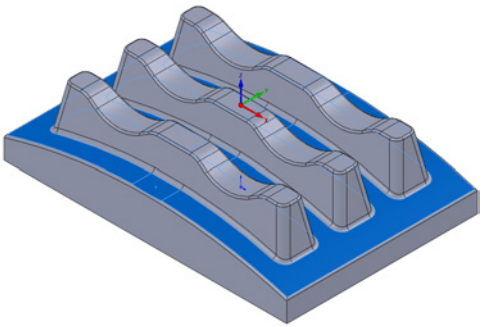

Edge surface

A ball nose mill tool of **Ø16** is used for the operation.

The **Vertical tangential arc** method is used for Lead-in and Lead-out.

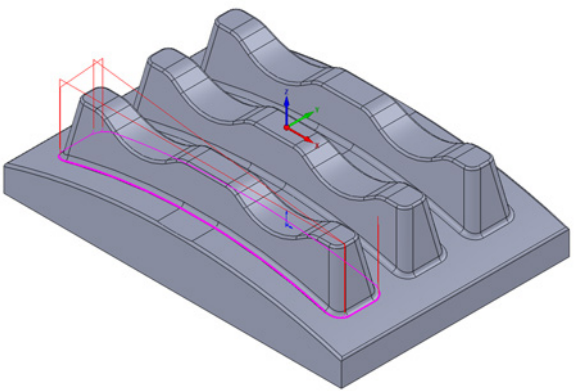

The machining of the defined drive surface is performed in cuts parallel to the edge surface presented on the illustration.

Two more HSS Parallel to Surface operations are defined in a similar manner for machining of two other cusps.

Exercise #4: Perpendicular to curve strategy

This exercise illustrates the use of the HSS Perpendicular to Curve operation for cylindrical surface machining.

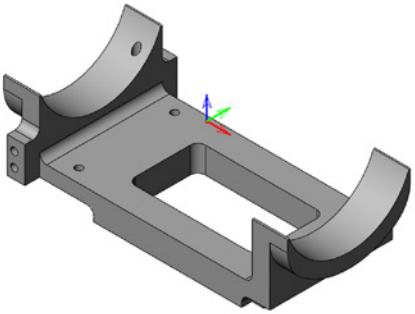

The **HSS_PerpToCurve_selected_faces_T1** operation is used to perform the finish machining of the right cylindrical face.

The geometry is defined as shown below.

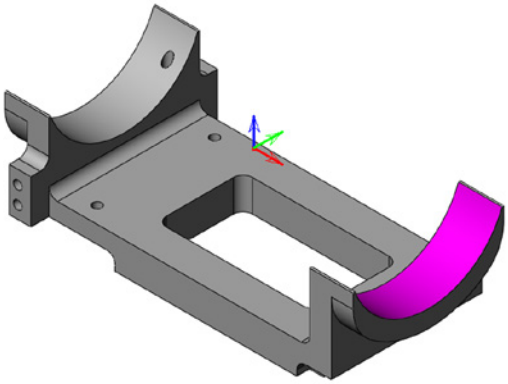

Drive surface

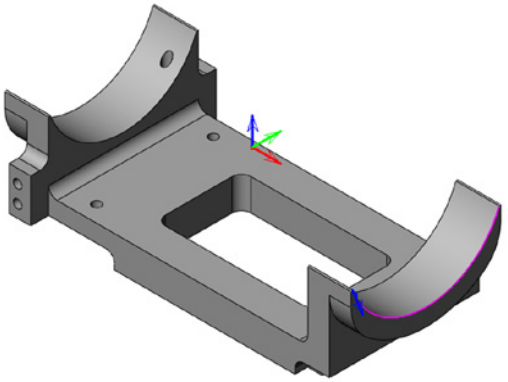

Edge curve

The drive surface is extended by 5 mm on both sides.

A ball nose mill tool of **Ø6** is used for the operation.

The machining of the cylindrical drive surface is performed in cuts perpendicular to the edge curve presented on the illustration.

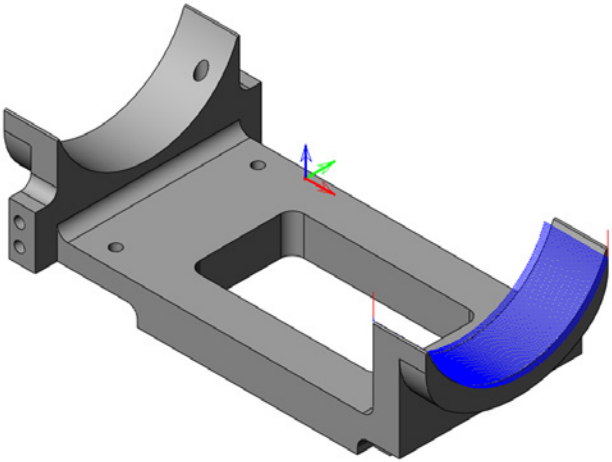

Exercise #5: Morph between two boundary curves strategy

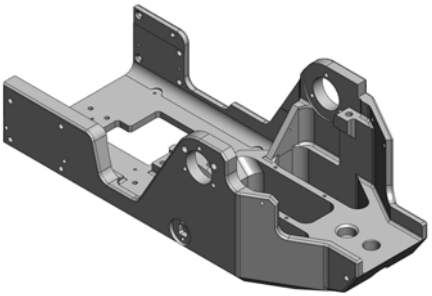

This exercise illustrates the use of the HSS Morph between two boundary curves operation for an aerospace part machining.

The **HSS_Morph_Curve_selected_faces_T1** operation is used to perform the finish machining of the fillet faces.

The geometry is defined as shown below.

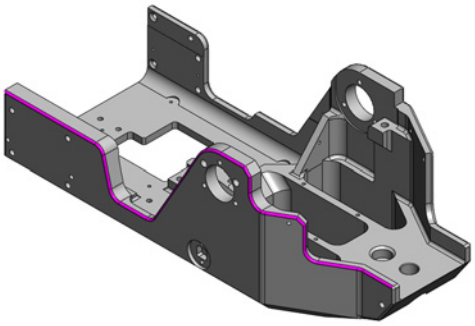

Drive surface

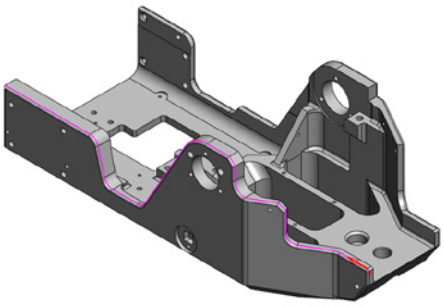

Start edge curve

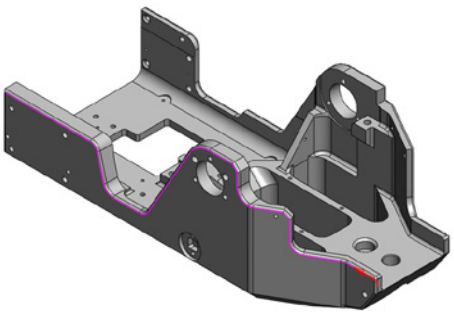

End edge curve

A ball nose mill tool of **Ø4** is used for the operation.

The machining of the defined drive surface is performed between two edge curves presented on the illustration.

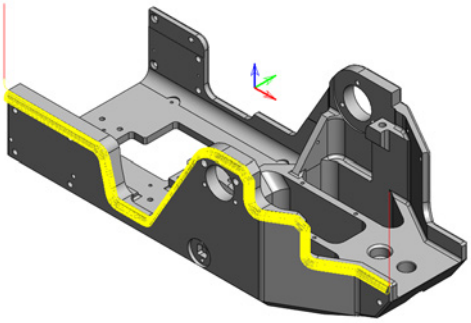

Exercise #6: Morph between two adjacent surfaces strategy

This exercise illustrates the use of the HSS Morph between two adjacent surfaces operation for a mold insert machining.

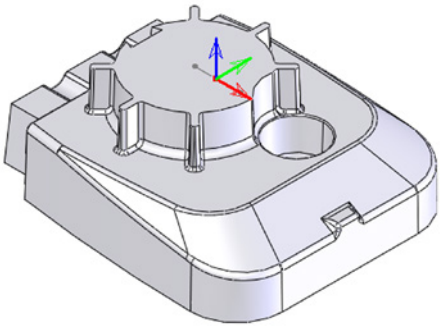

The **HSS_Morph_Surf_selected_faces_T1** operation is used to perform the finish machining of the part's front inclined faces.

The geometry is defined as shown below.

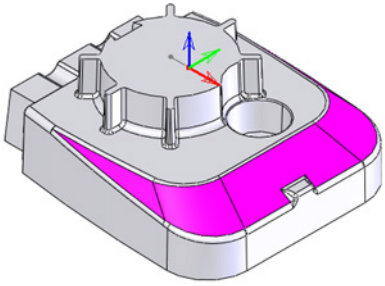

Drive surface

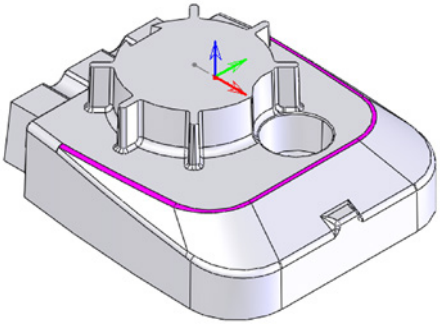

Start edge surface

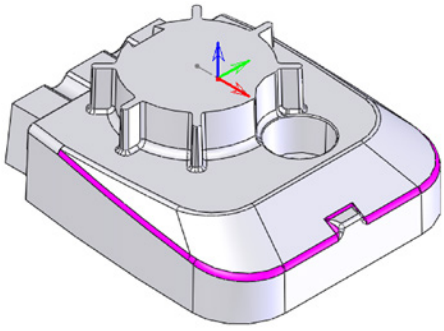

End edge surface

A ball nose mill tool of **Ø6** is used for the operation.

The machining of the defined drive surfaces is performed in a number of cuts between two edge surfaces presented on the illustration.

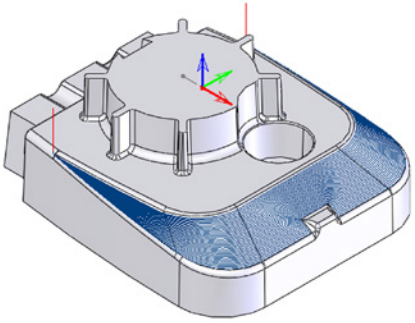

Exercise #7: Projection strategy

This exercise illustrates the use of the HSS Projection operation for a mold insert part machining.

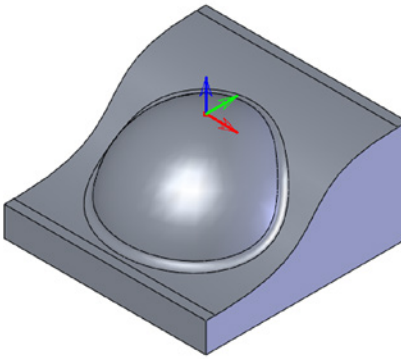

The **HSS_Proj_selected_faces** operation is used to perform the finish machining of the 3D fillet-shaped faces.

The geometry is defined as shown below.

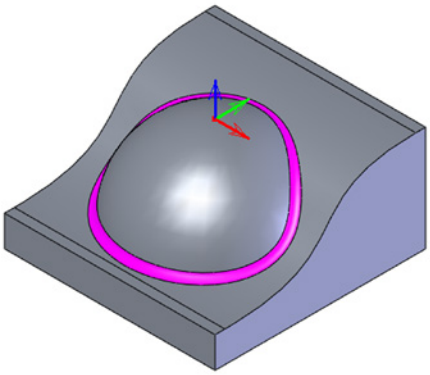

Drive surface

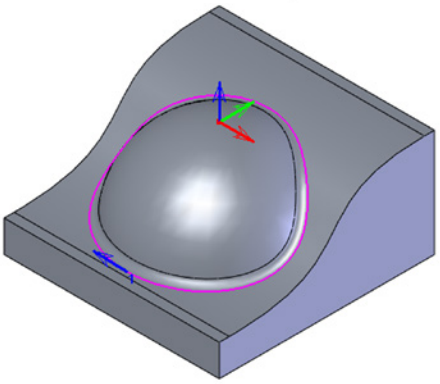

Projection curve

A ball nose mill tool of **Ø8** is used for the operation.

The machining is performed in a single cut following the projection curve presented on the illustration.

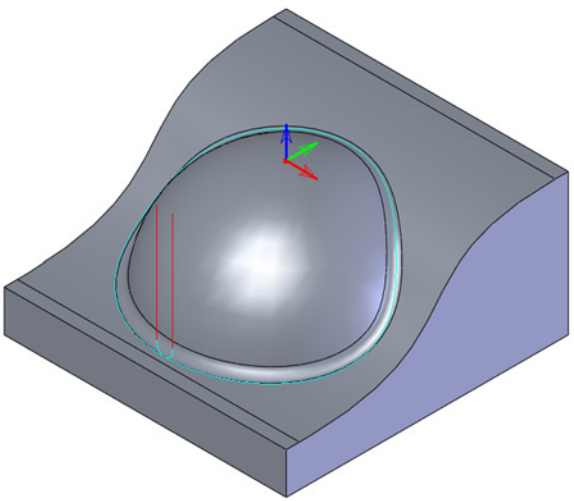

Exercise #8: General HSS machining

This exercise illustrates the use of the HSS functionality for machining of the part shown on the illustration.

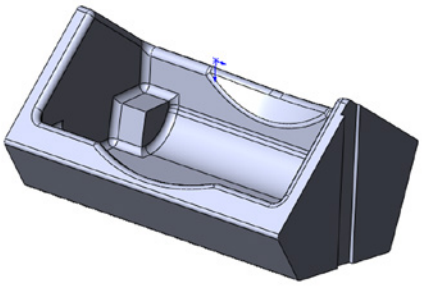

HSS_CZ_selected_faces_T1

This operation performs the Constant Z machining of the part side face with the slot.

The drive surface is defined as shown below.

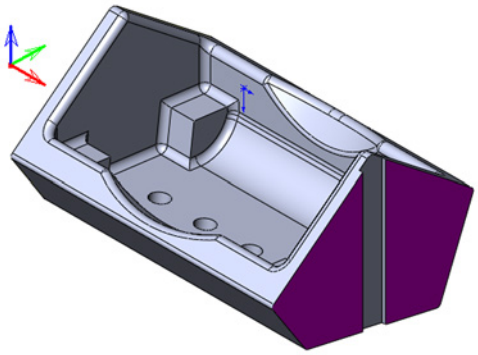

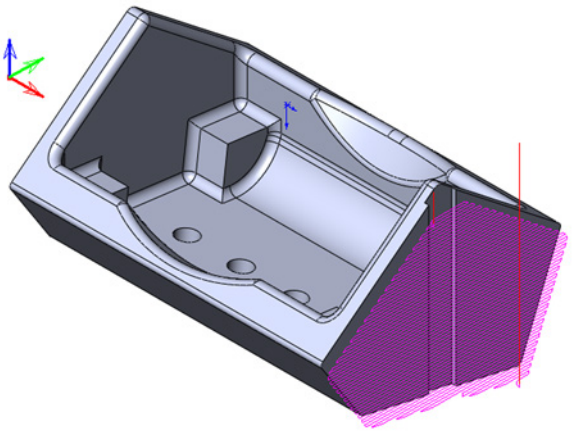

A ball nose mill tool of **Ø10** is used for the operation.

To avoid the tool movements to the clearance area over the slot, the **Gaps along cut** option is set to **Direct** for **Large gaps**, and the **Blend spline** option is used for **Links between slices**.

The machining is performed in parallel Constant Z cuts over the slot on the defined drive surface.

HSS_Linear_selected_faces1_T2

This operation performs the Linear machining of the part floor.

The drive surface on the flat floor is defined as shown.

A ball nose mill tool of **Ø8** is used for the operation.

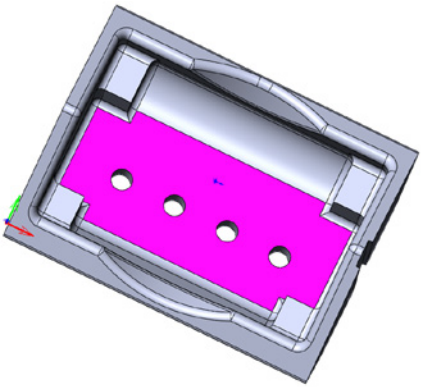

In the same manner as in the previous operation, the tool movements to the Clearance area over the holes on the floor are avoided by setting the **Gaps along cut** option to **Direct** for **Large gaps** and using the **Blend spline** option for **Links between slices**.

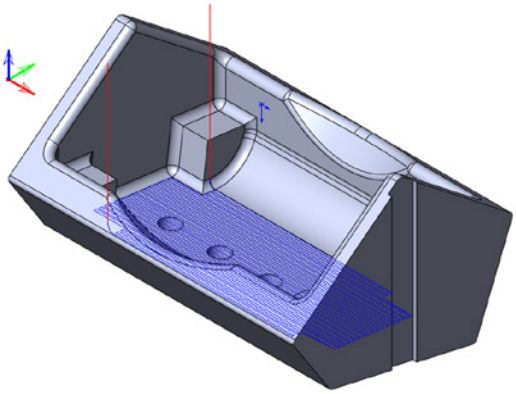

The machining is performed in Linear Parallel cuts on the defined drive surface.

HSS_Morph_Curves_selected_faces2_T2

This operation performs machining of the part inner fillet.

The geometry is defined as shown below.

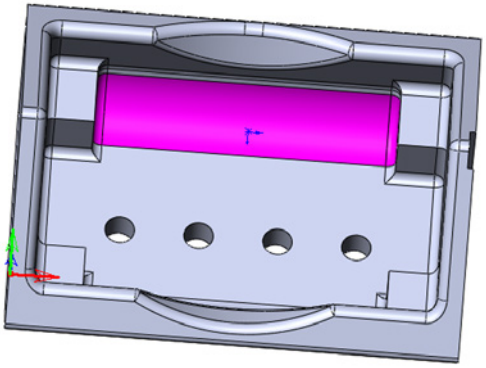

Drive surface

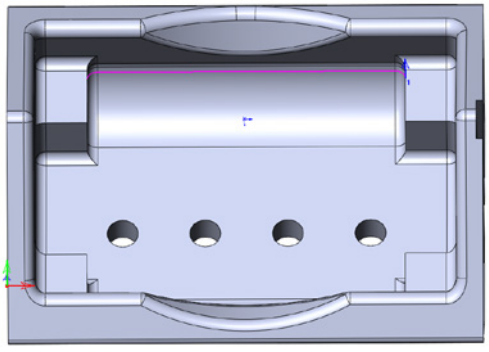

Start edge curve

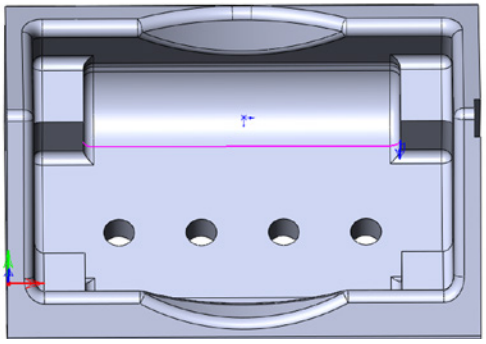

End edge curve

A ball nose mill tool of **Ø8** is used for the operation.

The linking between slices is performed using the **Direct** option.

The gouge checking is performed by **Leaving out gouging points** with the offset of 10 mm from the following check surfaces:

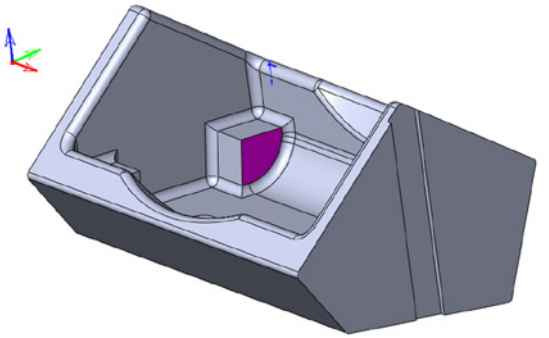

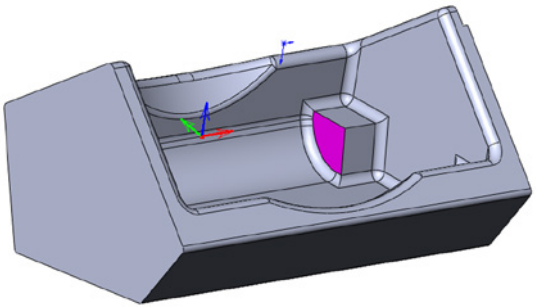

The machining is performed in cuts between the edge curves on the defined drive surface. The tool path is trimmed at the vertical wall areas to avoid the tool contact with the defined check surfaces.

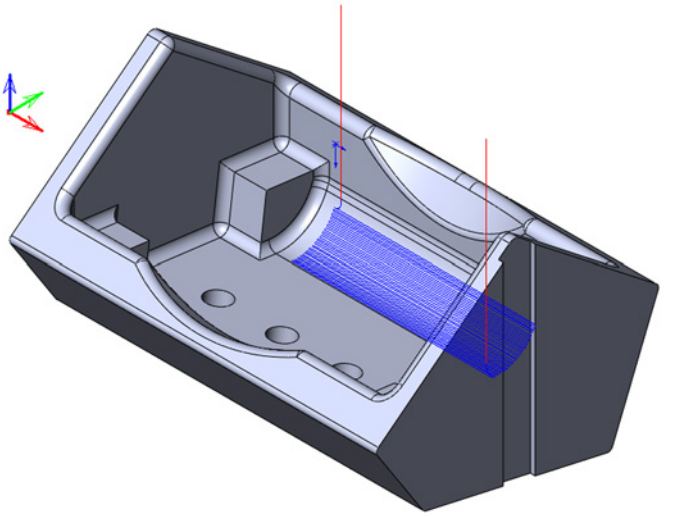

HSS_CZ_selected_faces4_T3

The operation performs the Constant Z machining of the part undercut face.

The drive surface is defined as shown on the right.

The drive surface is trimmed by 12 mm on each side.

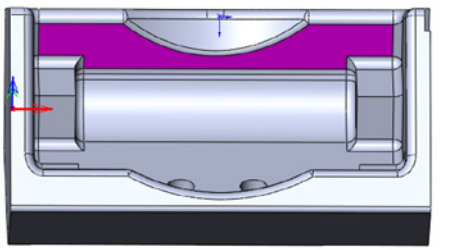

A slot mill tool of **Ø30** is used for the operation.

The linking in the gap area and between Slices is performed using the **Direct** option.

The machining is performed in parallel Constant Z cuts on the defined drive surface.

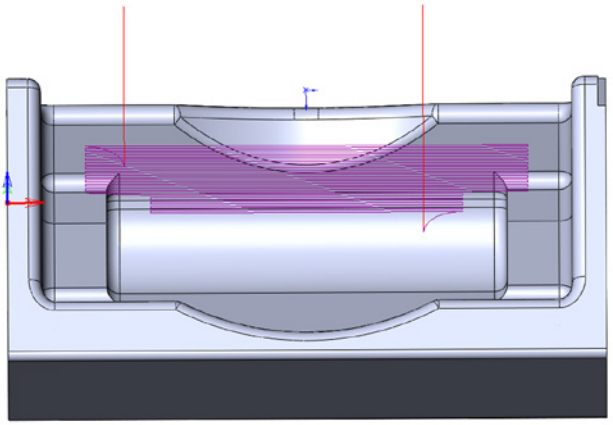

HSS_Morph_Curves_selected_faces5_T4

This operation performs the machining of the part inner fillets.

The geometry is defined as shown below.

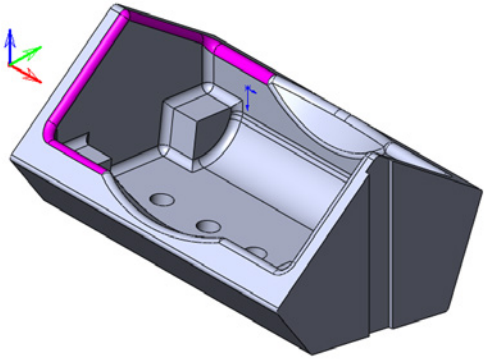

Drive surface

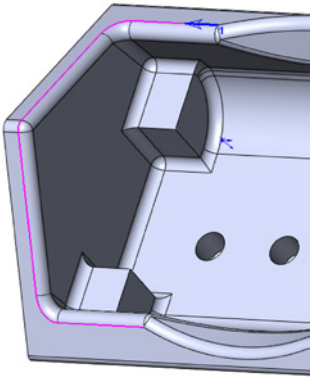

Start edge curve

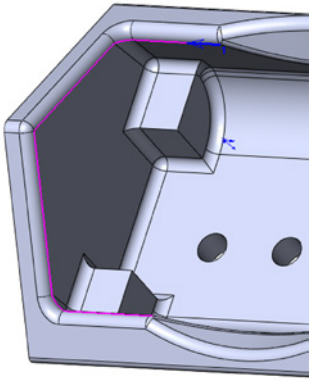

End edge curve

A ball nose mill tool of **Ø6** is used for the operation.

The linking between slices is performed using the **Blend spline** option.

The machining is performed on the designated upper fillet area.

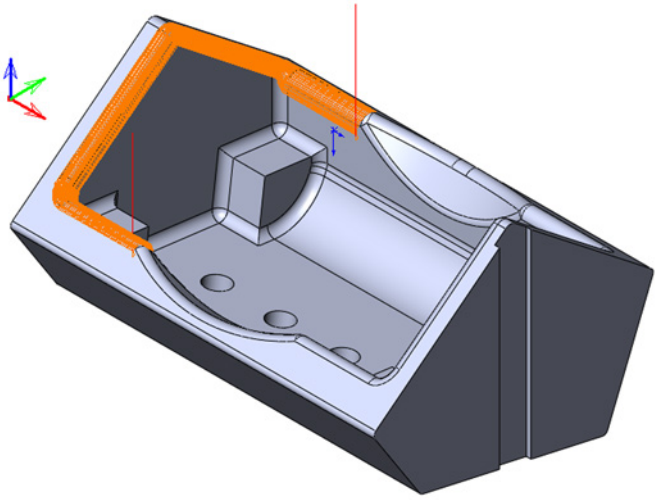

Exercise #9: General HSS machining

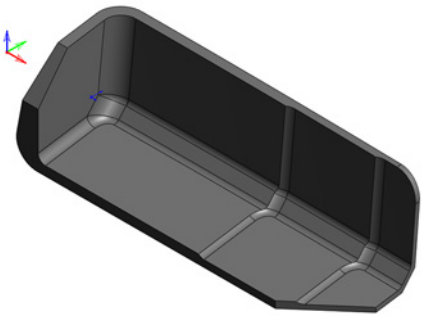

This exercise illustrates the use of the HSS functionality for machining of the part shown on the illustration. The part was pre-machined using the HSM technology.

HSS_Linear_selected_faces_T3

This operation performs the Linear machining of the part inclined face.

The drive surface is defined as shown below.

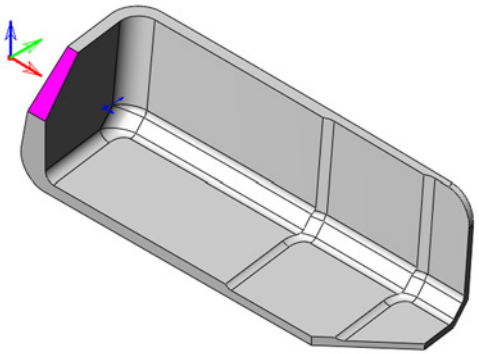

An end mill tool of **Ø8** is used for the operation.

The linking between slices is performed using the **Direct** option.

The machining is performed in parallel linear cuts as shown.

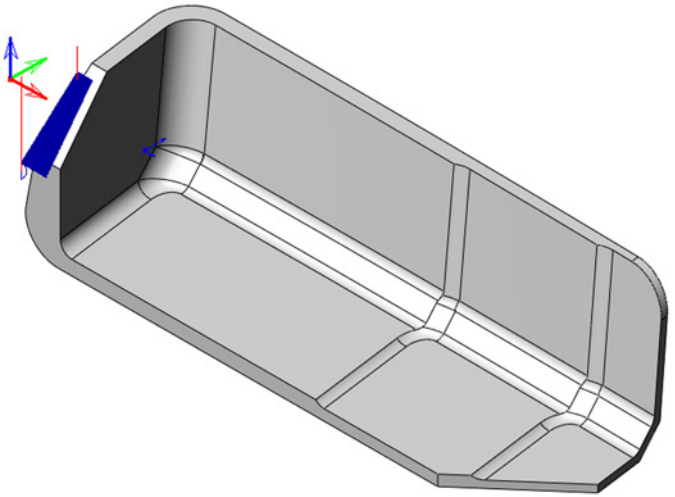

HSS_Linear_selected_faces1_T3

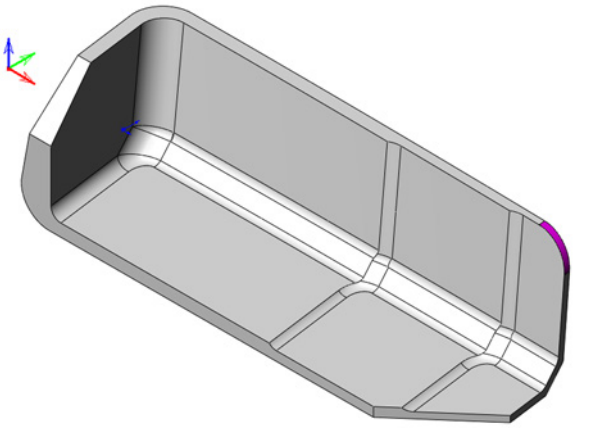

This operation performs the Linear machining of the part rim.

The drive surface is defined as shown.

An end mill tool of **Ø8** is used for the operation.

The linking between slices is performed using the **Direct** option.

The machining is performed in parallel linear cuts as shown.

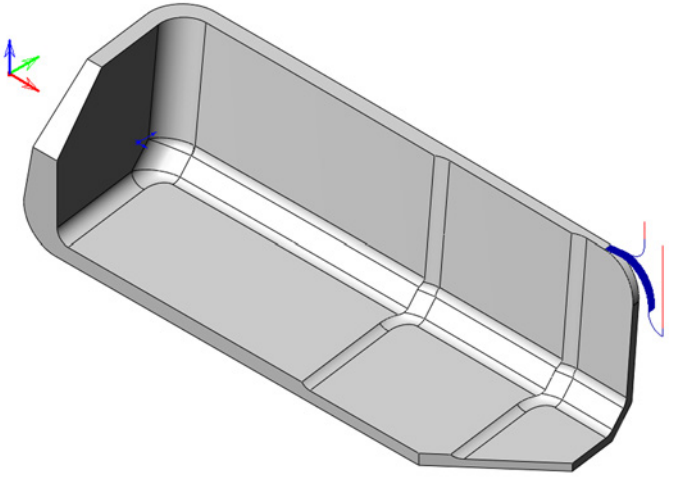

HSS_PC_CZ_selected_faces2_T4

This operation performs the Constant Z machining of the part back and bottom faces.

The drive surface is defined as shown.

The drive surface is extended by 3 mm on each side.

A slot mill tool of **Ø30** is used for the operation.

The gouge checking is performed using the **Retracting tool along tool axis** option to avoid the contact between the tool and the drive surfaces.

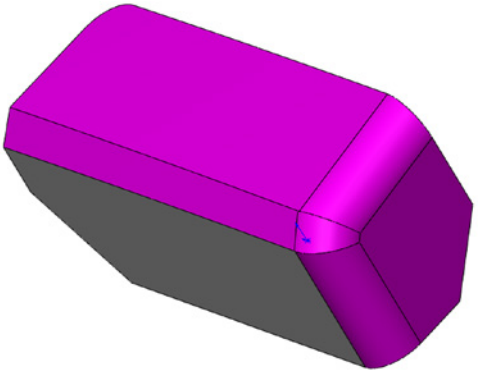

The machining is performed in parallel Constant Z cuts on the defined drive surface.

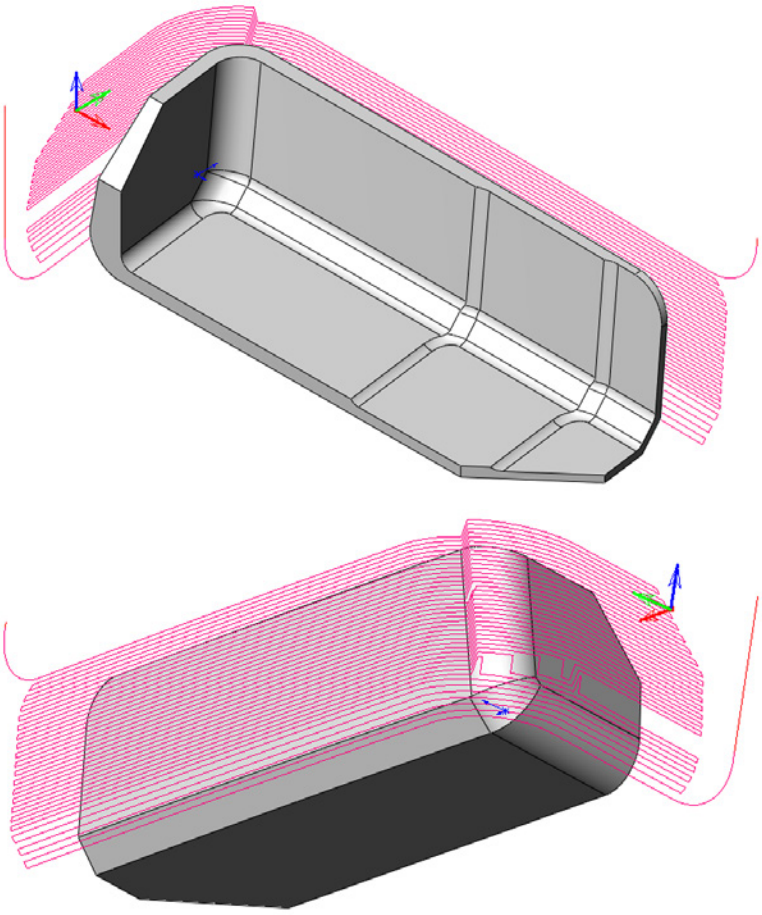

Exercise #10: General HSS machining

This exercise illustrates the use of the HSS functionality for machining of the part shown on the illustration. The part was pre-machined using the HSM technology.

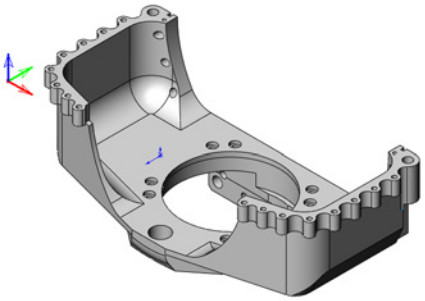

HSS_CZ_selected_faces_T1

This operation performs the Constant Z machining of the part back and bottom faces.

The drive surface is defined as shown.

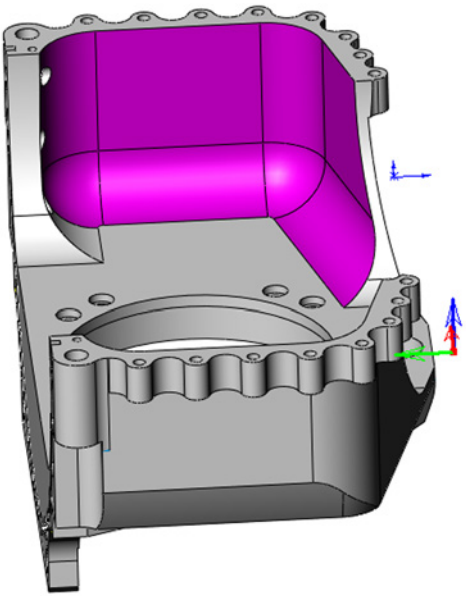

A lollipop mill tool of **Ø16** is used for the operation.

To avoid unnecessary tool movements, the **Gaps along cut** option is set to **Direct** for **Large gaps**, and the **Follow surfaces** option is used for **Links between slices**.

The machining is performed in parallel Constant Z cuts as shown.

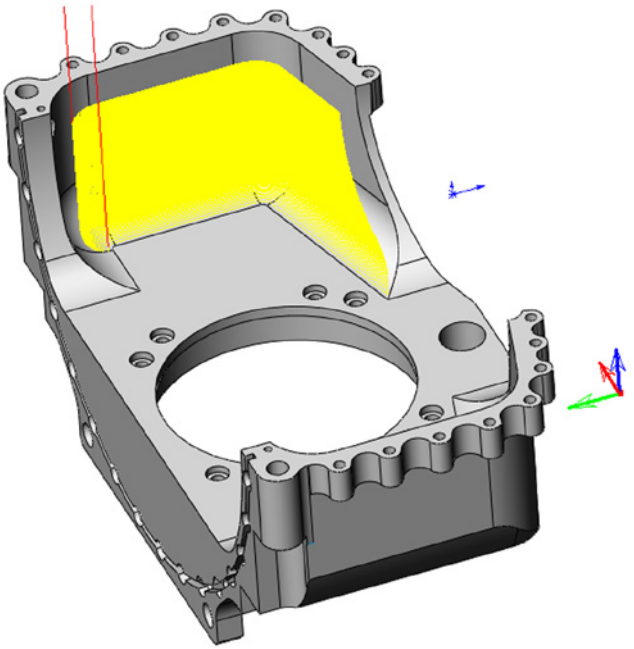

HSS_Morph_Curve_selected_faces1_T2

This operation performs the machining of the part faces shown on the illustration.

The geometry is defined as shown below.

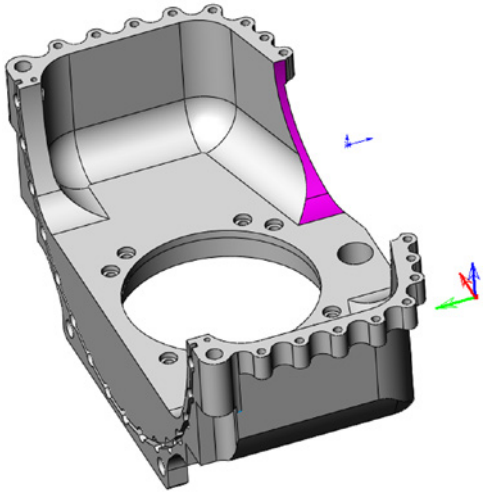

Drive surface

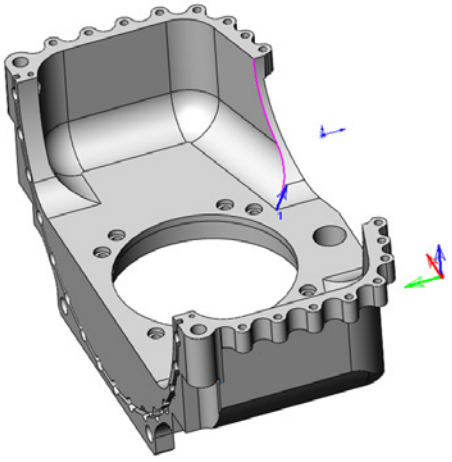

Start edge curve

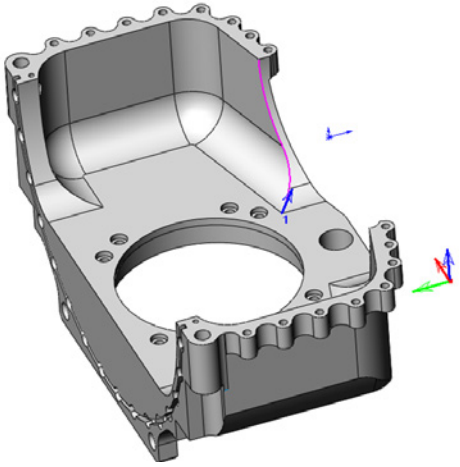

End edge curve

A ball nose mill tool of **Ø6** is used for the operation.

The linking between slices is performed using the **Direct** option.

The machining of the defined drive surface is performed between two edge curves.

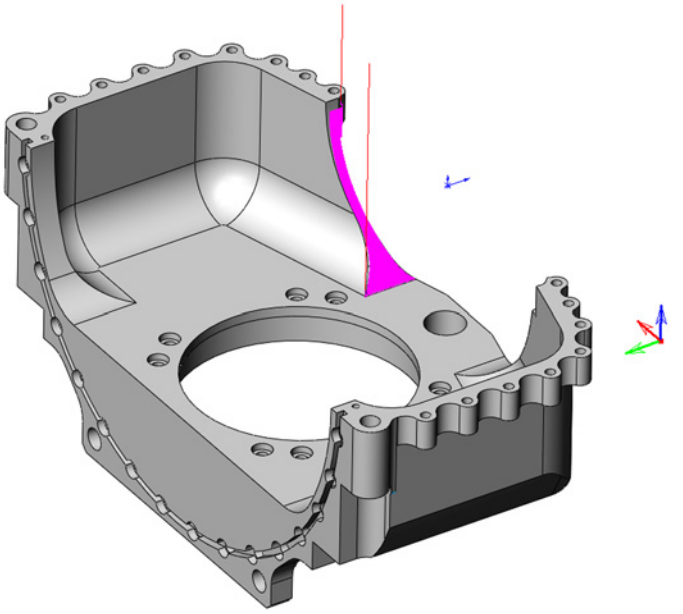

HSS_Morph_Surf_selected_faces2_T2

This operation performs the machining of the part faces shown on the illustration.

The geometry is defined as shown below.

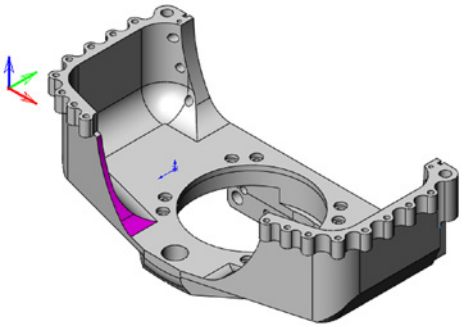

Drive surface

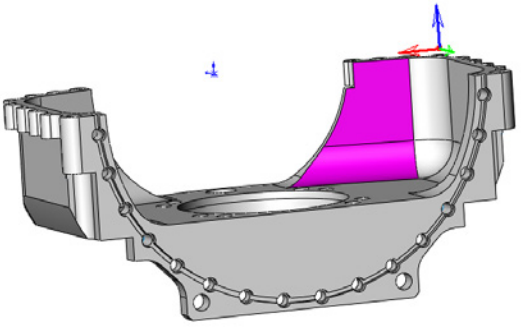

Start edge surface

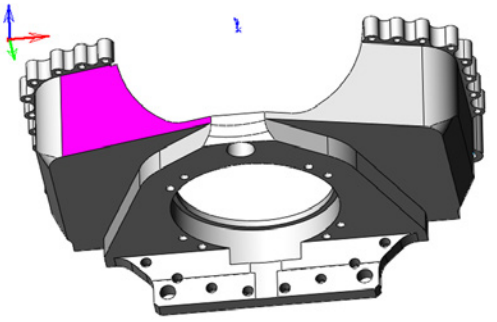

End edge surface

A ball nose mill tool of **Ø6** is used for the operation.

To avoid the unnecessary tool movements, the **Gaps along cut** option is set to **Direct** for **Large gaps**, and the **Follow surfaces** option is used for **Links between slices**.

The machining of the defined drive surface is performed in a number of cuts between two edge surfaces presented on the illustration.

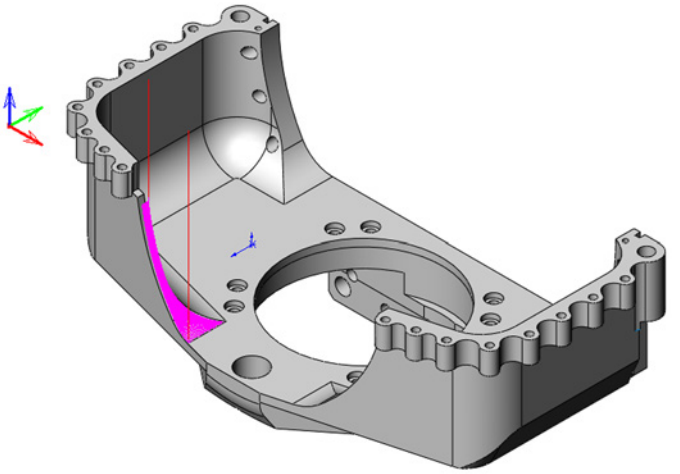

Exercise #11: General HSS machining

This exercise illustrates the use of the HSS Morph between two boundary curves operation for a bottle bottom cavity part machining.

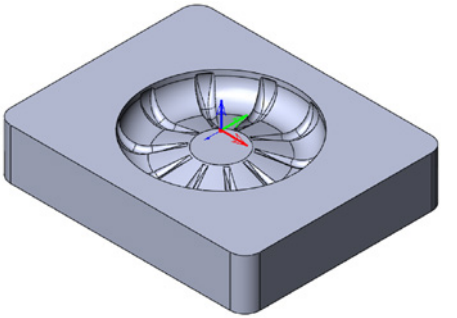

The **HSS_Morph_Curve_selected_faces_T1** operation is used to perform the finish machining of the part faces containing the undercut area.

The geometry is defined as shown below.

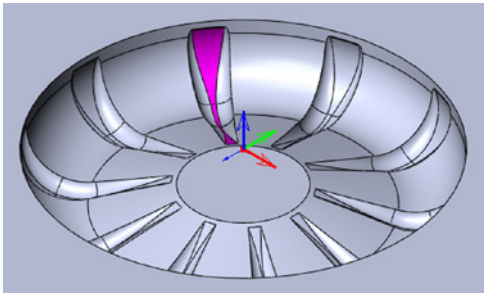

Drive surface

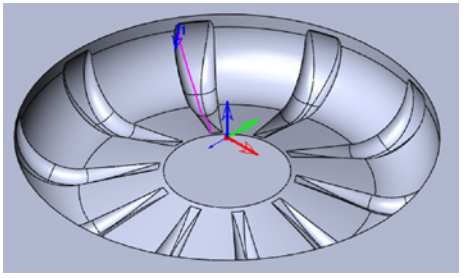

Start edge curve

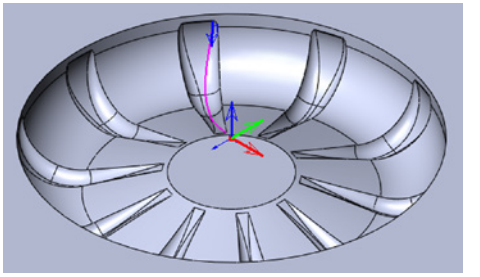

End edge curve

A lollipop tool of **Ø5** is used for the operation.

The machining of the defined drive surface is performed between two edge curves presented on the illustration.

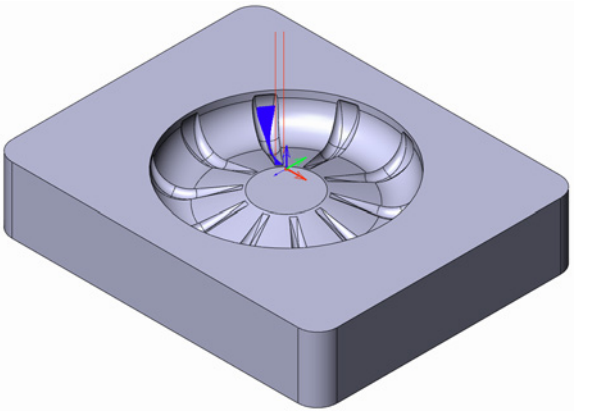

SolidCAM 2014

SolidCAM 2014 User Guide: HSS

iMachining 2D

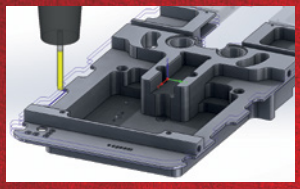

2.5D Milling

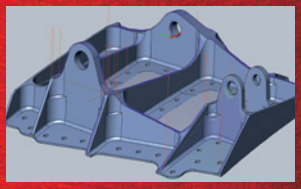

HSS (High-Speed Surface Machining)

iMachining 3D

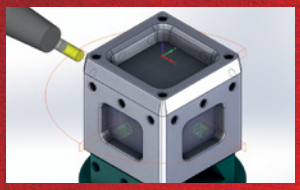

Indexed Multi-Sided Machining

HSM (High-Speed Machining)

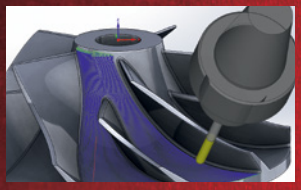

Simultaneous 5-Axis Machining

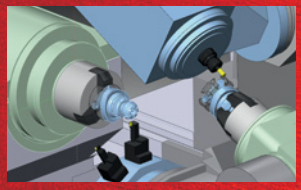

Turning & Advanced Mill-Turn

Solid Probe

YouTube Broadcast Yourself™

www.youtube.com/SolidCAMProfessor
www.youtube.com/SolidCAMiMachining

www.facebook.com/SolidCAM

www.solidcam.com

SolidCAM
iMachining – The Revolution in CAM!